N. 83rd ST. OVER LITTLE THOMPSON BRIDGE

August 19, 2015

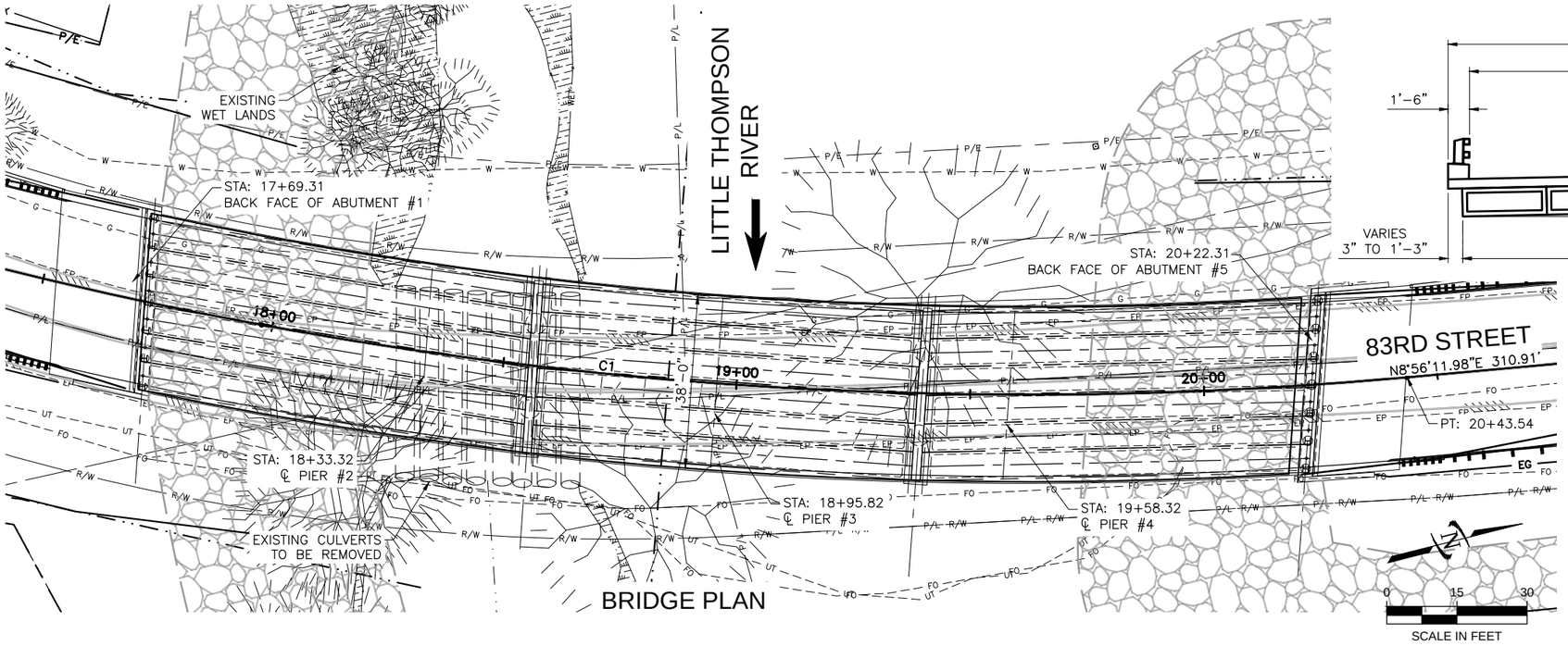

BRIDGE PLAN

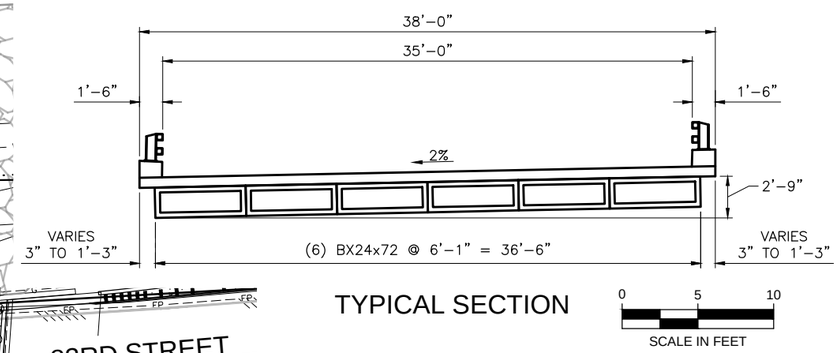

TYPICAL SECTION

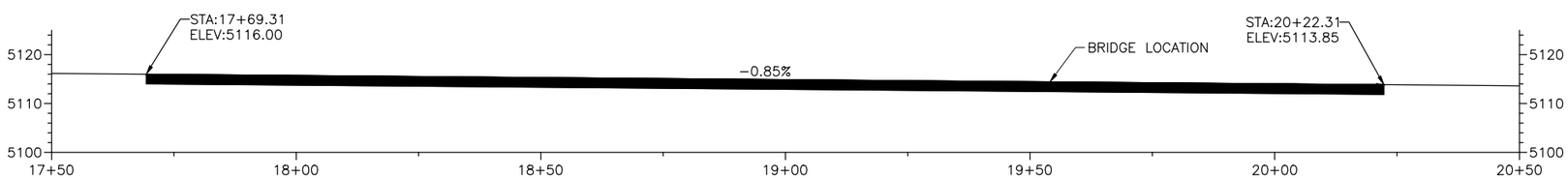

PROFILE GRADE

ALIGNMENT CURVE TABLE						
CURVE #	LENGTH	RADIUS	TANGENT	DELTA	CHORD DIRECTION	CHORD LENGTH
C1	491.76'	900.00'	252.18'	31°18'22"	N24°35'23"E	485.66'

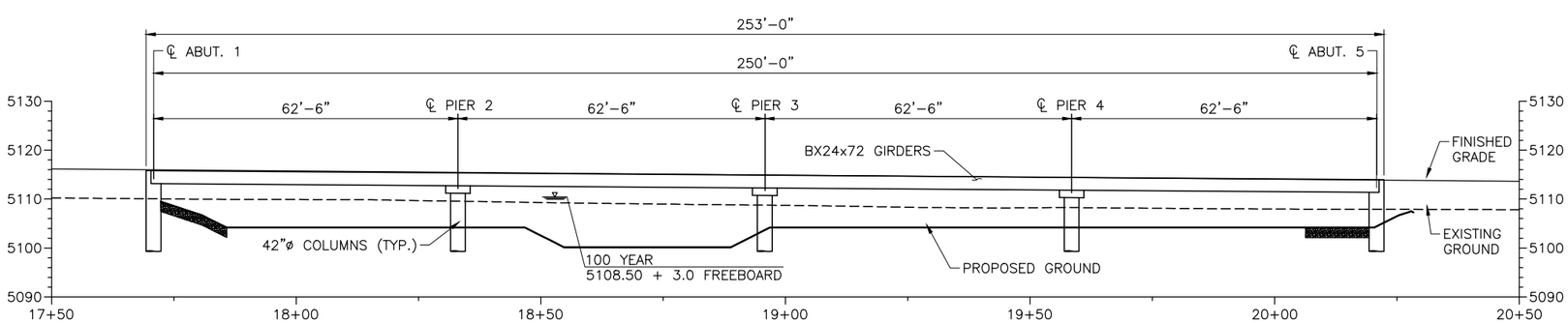

BRIDGE SECTION

MEASURED ALONG 83RD STREET CENTERLINE

HORZ 0 15 30

VERT 0 15 30

SCALE IN FEET

Boulder County

J-U-B ENGINEERS, INC.
4745 Boardwalk Drive
Building D Suite #200
Fort Collins, CO 80525
Phone: 970.377.3602