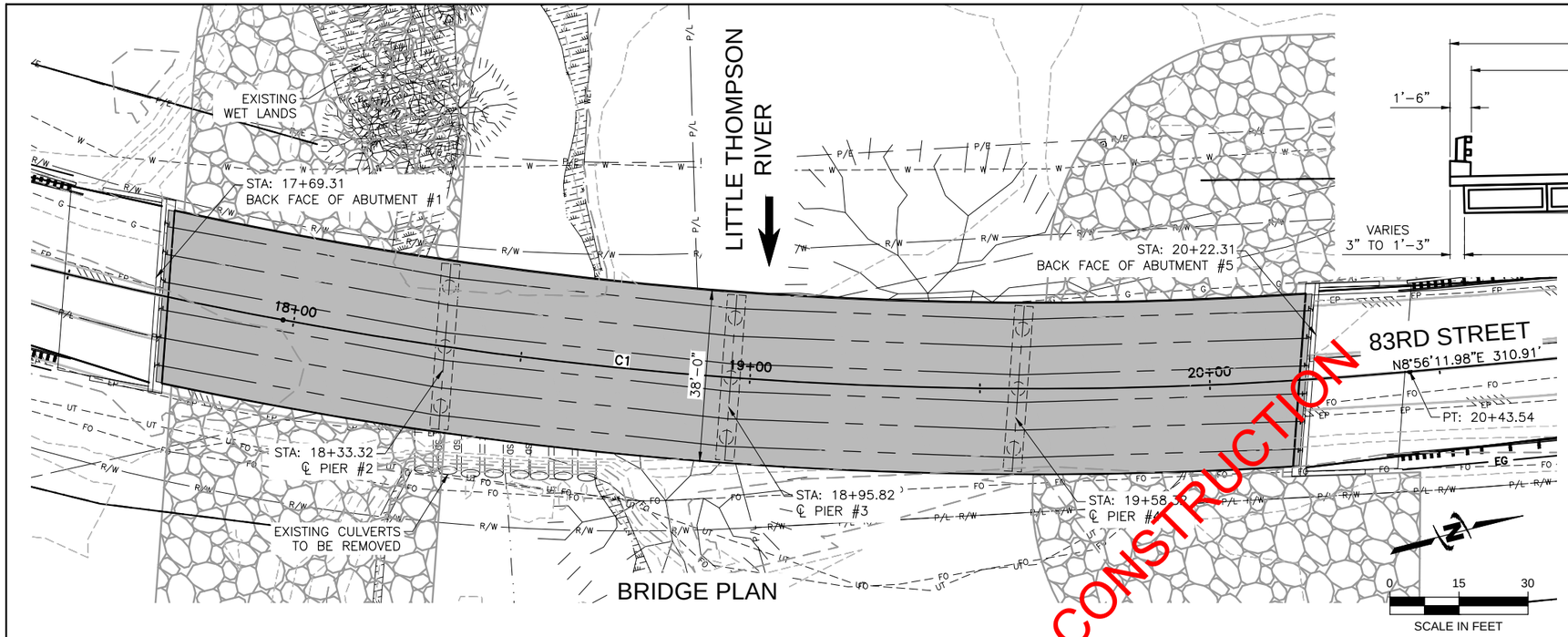

BRIDGE PLAN

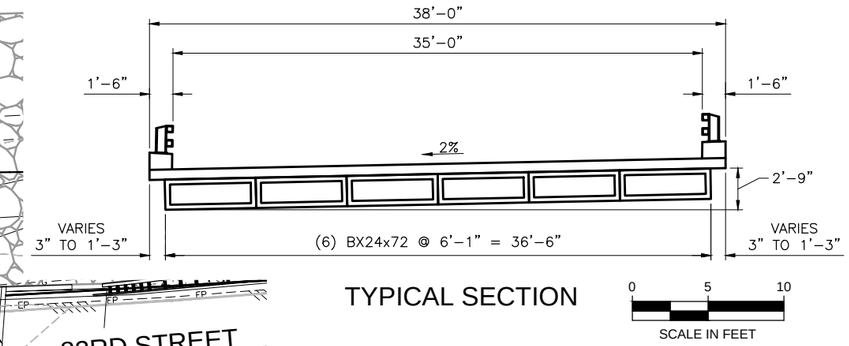

TYPICAL SECTION

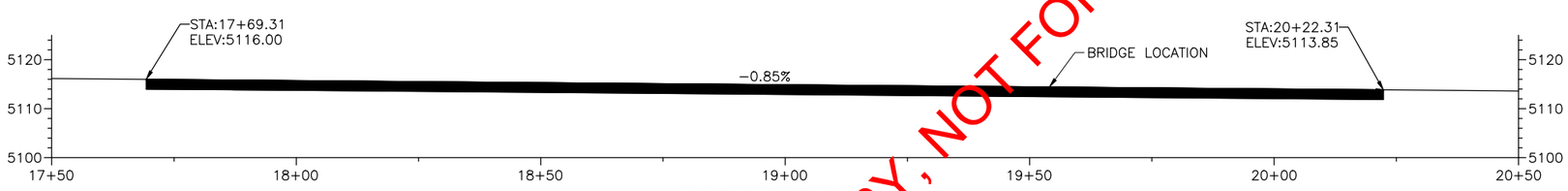

PROFILE GRADE

ALIGNMENT CURVE TABLE

CURVE #	LENGTH	RADIUS	TANGENT	DELTA	CHORD DIRECTION	CHORD LENGTH
C1	491.76'	900.00'	252.18'	31°18'22"	N24°35'23"E	485.66'

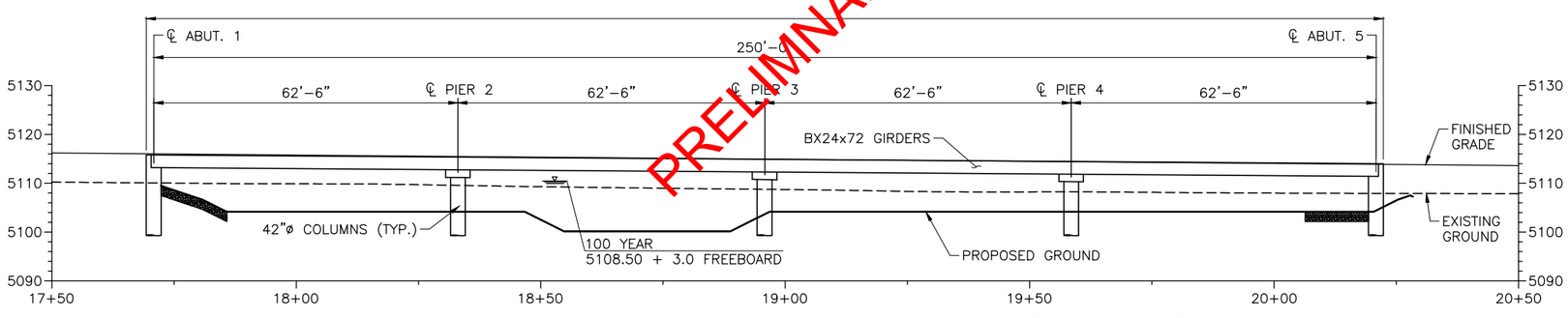

BRIDGE SECTION

MEASURED ALONG 83RD STREET CENTERLINE

HORZ 0 15 30
VERT 0 15 30
SCALE IN FEET

Know what's below. Call before you dig.

PRELIMINARY, NOT FOR CONSTRUCTION

Preliminary

Computer File Information					
Creation Date: 10/30/13	Initials: DTUTTLE	R-X	mm/dd/yy	XXXXX	XXX
Last Modification Date: 11/21/14	Initials: DWOOD	R-X	mm/dd/yy	XXXXX	XXX
Full Path: F:\Projects\JUB\Boulder_County\87-13-015_83rd_LTR\CAD\Sheet		R-X	mm/dd/yy	XXXXX	XXX
Drawing File Name: 87-13-015_S-602.dwg		R-X	mm/dd/yy	XXXXX	XXX
ACAD Ver. ACAD 2013 Scale: AS SHOWN	Units: 1"=10'	R-X	mm/dd/yy	XXXXX	XXX

Index of Revisions

Boulder County

JUB
J-U-B ENGINEERS, INC.
3538 JFK Parkway
Suite #1
Fort Collins, CO 80525
Phone: 970.377.3602

As Constructed
No Revisions: mm/dd/yy
Revised: mm/dd/yy
Void: mm/dd/yy

83RD STREET BRIDGE
GENERAL LAYOUT

Designer: DT
Detailer: BG
Sheet Subset: STRUCTURAL
Subset Sheet: 2 of 7

Project No./Code
/
Drawing Number S-602
Sheet Number 23