NOTES:

1. ALL WORK SHALL BE IN ACCORDANCE WITH THE COLORADO DEPARTMENT OF TRANSPORTATION STANDARD SPECIFICATIONS FOR ROAD AND BRIDGE CONSTRUCTION, 2011 EDITION, AND PROJECT SPECIAL PROVISIONS; THE LATEST M&S STANDARDS; BOULDER COUNTY STANDARDS; AND THE PROJECT CONTRACT BID DOCUMENTS.

2. ALL CONCRETE SHALL BE CLASS D.

3. ALL CONSTRUCTION JOINTS NOT SHOWN ON THE PLANS SHALL BE APPROVED BY THE ENGINEER.

4. ALL EXPOSED CONCRETE SHALL BE CHAMFERED ¾ INCH.

5. GRADE 60 REINFORCING STEEL IS REQUIRED.

6. ALL REINFORCING STEEL SHALL BE EPOXY COATED UNLESS OTHERWISE NOTED.

7. Ⓝ DENOTES NON COATED REINFORCING STEEL.

8. THE USE OF A TEMPORARY DIVERSION AND DEWATERING DURING CONSTRUCTION MAY BE REQUIRED. THE COST OF A TEMPORARY DIVERSION AND DEWATERING WILL NOT BE PAID FOR SEPARATELY BUT SHALL BE INCLUDED IN THE COST OF THE WORK.

9. THE FOLLOWING TABLE GIVES THE MINIMUM LAP SPLICE LENGTH FOR EPOXY COATED REINFORCING BARS PLACED IN ACCORDANCE WITH CDOT SUBSECTION 602.06. THESE SPLICE LENGTHS SHALL BE INCREASED BY 25% FOR BARS SPACED AT LESS THAN 6" ON CENTER OR LESS THAN 3" OF LATERAL COVER.

BAR SIZE	#4	#5	#6	#7	#8	#9	#10	#11
SPLICE LENGTH FOR CLASS D CONCRETE	1'-3"	1'-7"	2'-5"	2'-10"	3'-8"	4'-8"	5'-11"	7'-3"

THE FOLLOWING TABLE GIVES THE MINIMUM LAP SPLICE LENGTH FOR BLACK REINFORCING BARS PLACED IN ACCORDANCE WITH CDOT SUBSECTION 602.06. THESE SPLICE LENGTHS SHALL BE INCREASED BY 25% FOR BARS SPACED AT LESS THAN 6" ON CENTER OR LESS THAN 3" OF LATERAL COVER.

BAR SIZE	#4	#5	#6	#7	#8	#9	#10	#11
SPLICE LENGTH FOR CLASS D CONCRETE	1'-1"	1'-4"	1'-7"	1'-11"	2'-6"	3'-1"	3'-11"	4'-10"

THE ABOVE SPLICE LENGTHS SHALL BE INCREASED BY 20% FOR 3 BAR BUNDLES AND 33% FOR 4 BAR BUNDLES.

10. THE CONTRACTOR SHALL BE RESPONSIBLE FOR THE STABILITY OF ALL OPEN CUTS FOR REQUIRED EARTHWORK, UTILITIES, AND THE STRUCTURE DURING CONSTRUCTION.

11. STATIONS, ELEVATIONS, AND DIMENSIONS CONTAINED IN THESE PLANS ARE CALCULATED FROM A RECENT FIELD SURVEY. THE CONTRACTOR SHALL VERIFY ALL DEPENDENT DIMENSIONS IN THE FIELD BEFORE ORDERING OR FABRICATING ANY MATERIAL.

12. THE INFORMATION SHOWN ON THESE PLANS CONCERNING THE TYPE AND LOCATION OF UNDERGROUND UTILITIES IS NOT GUARANTEED TO BE ACCURATE OR ALL INCLUSIVE. THE CONTRACTOR IS RESPONSIBLE FOR MAKING HIS OWN DETERMINATION AS TO THE TYPE AND LOCATION OF UNDERGROUND UTILITIES AS MAY BE NECESSARY TO AVOID DAMAGE THERETO. THE CONTRACTOR SHALL CONTACT THE UTILITY NOTIFICATION CENTER OF COLORADO AT 1-800-922-1987 AT LEAST 2 DAYS (NOT INCLUDING DAY OF NOTIFICATION) PRIOR TO ANY EXCAVATION OR ANY OTHER EARTHWORK.

13. STRUCTURAL CONCRETE EXPOSED TO SOIL SHALL CONFORM TO CEMENTITIOUS MATERIAL CLASS 0, CORRESPONDING TO SULFATE EXPOSURE CLASS 0.

14. REFER TO DRAFT GEOTECHNICAL ND PAVEMENT INVESTIGATION REPORT, DATED AUGUST 11, 2015 FOR ADDITIONAL INFORMATION.

15. STRUCTURAL EXCAVATION AND BACKFILL SHALL BE PAID FOR IN ACCORDANCE WITH CDOT STANDARD M-206-1 UNLESS OTHERWISE NOTED ON THE PLANS. BEDDING MATERIAL TO BE INCLUDED IN THE COST OF THE WORK.

16. A COLORED CONCRETE STAIN SHALL BE APPLIED TO A CLASS 5 FINISH ON ALL EXPOSED CONCRETE SURFACES OF THE WINGWALLS, HEADWALLS AND TOEWALLS TO 1'-0" BELOW FINISHED GRADE. THE COLOR SHALL BE TAN, EQUIVALENT TO FEDERAL STANDARD 595B COLOR NO. 20400. ALL COLORS WILL BE SELECTED FROM TEST PANELS PROVIDED BY THE CONTRACTOR.

TABLE OF WALL QUANTITIES

ITEM	DESCRIPTION	UNITS	CASTLE GULCH	JENKS GULCH	HILL GULCH	LTTLE JAMES
206	STRUCTURE EXCAVATION	CY				
206	STRUCTURE BACKFILL (CLASS 1)	CY				
506	RIPRAP (18 INCH)	CY				
601	CONCRETE CLASS D (WALL)	SY				
601	STRUCTURAL CONCRETE STAIN	LB				
602	REINFORCING STEEL (EPOXY COATED)	LF				

ABBREVIATIONS

FF = FRONT FACE
BF = BACK FACE
EF = EACH FACE
FG = FINISHED GRADE
H = DESIGN HEIGHT
HCL = HORIZONTAL CONTROL LINE

DESIGN DATA

AASHTO LRFD, 7th EDITION WITH CURRENT INTERIMS
DESIGN METHOD: LOAD AND RESISTANCE FACTOR DESIGN

REINFORCED CONCRETE:
- CLASS D (WALL) CONCRETE: f'c = 4,500 PSI
- REINFORCING STEEL: fy = 60,000 PSI

SOIL PARAMETERS:

CDOT CLASS 1 STRUCTURAL BACKFILL
- UNIT WEIGHT, γ (PCF) = 135
- FRICTION ANGLE, ϕ (DEGREES) = 34

ON SITE SOIL
- UNIT WEIGHT, γ (PCF) = 125
- FRICTION ANGLE, ϕ (DEGREES) = 34

STRUCTURE DESCRIPTION

CASTLE GULCH:

50'-0" SINGLE 7x7 CBC

2 - CIP HEADWALLS
4 - CIP WINGWALLS

HILL GULCH:

50'-0" SINGLE 7x7 CBC

2 - CIP HEADWALLS
4 - CIP WINGWALLS

JENKS GULCH:

50'-0" SINGLE 7x7 CBC

2 - CIP HEADWALLS
4 - CIP WINGWALLS

LITTLE JAMES GULCH:

74'-0" (2) ADJACENT SINGLE 7x7 CBC

2 - CIP HEADWALLS
4 - CIP WINGWALLS

60% REVIEW SET

60%

CALL UTILITY NOTIFICATION CENTER OF COLORADO
811
CALL 2-BUSINESS DAYS IN ADVANCE BEFORE YOU DIG, GRADE, OR EXCAVATE FOR THE MARKING OF UNDERGROUND MEMBER UTILITIES

REVISIONS:	NO.	DATE	REVISION DESCRIPTION:

BOULDER COUNTY TRANSPORTATION DEPARTMENT
ENGINEERING DIVISION
AECOM

DESIGNED:	CAD:	CHECKED:	DATE:
MFV	MFV	SBH	01/22/2016

JAMES CANYON
STRUCTURE
GENERAL NOTES

PROJECT NO: SEPT12C24 SEPT12C91
SHEET NO: 24

stahrj 1/22/2016 10:39:21 AM L:\0048\900-CAD\02-SHEETS\S\James Canyon\BOCD-James-Final_CBC-GN.dgn

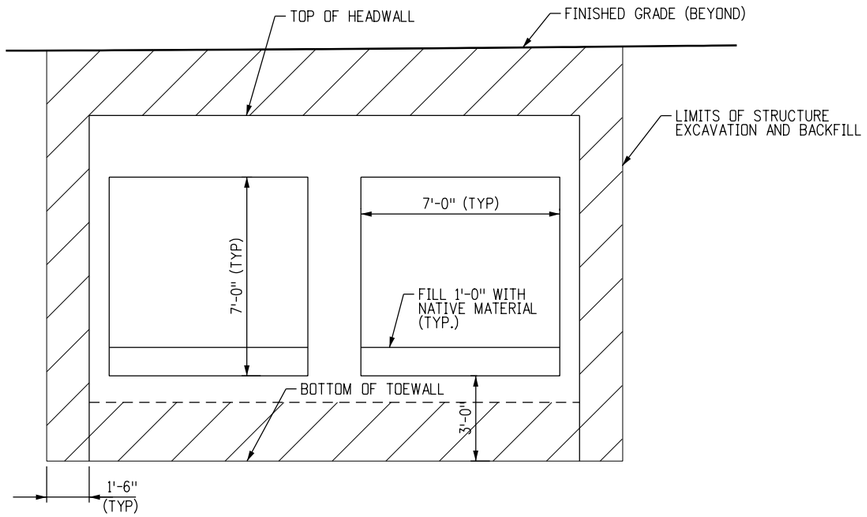

ELEVATION AT HEADWALL & TOEWALL LITTLE JAMES CREEK

INLET LOCATION SHOWN, OUTLET SIMILAR

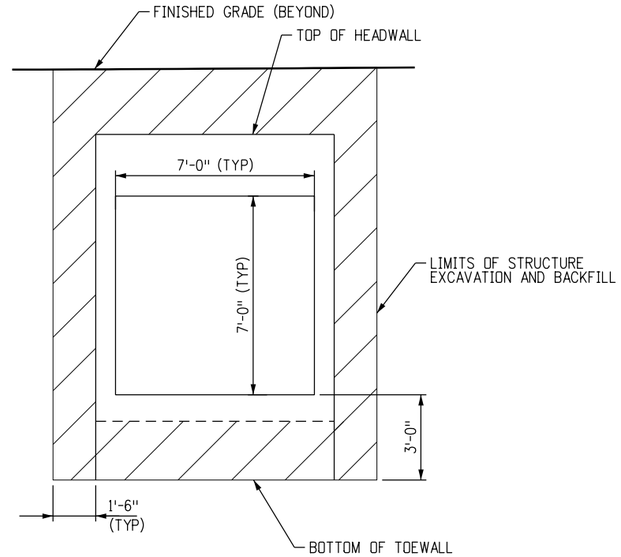

TYP. ELEVATION AT HEADWALL & TOEWALL

INLET LOCATION SHOWN, OUTLET SIMILAR

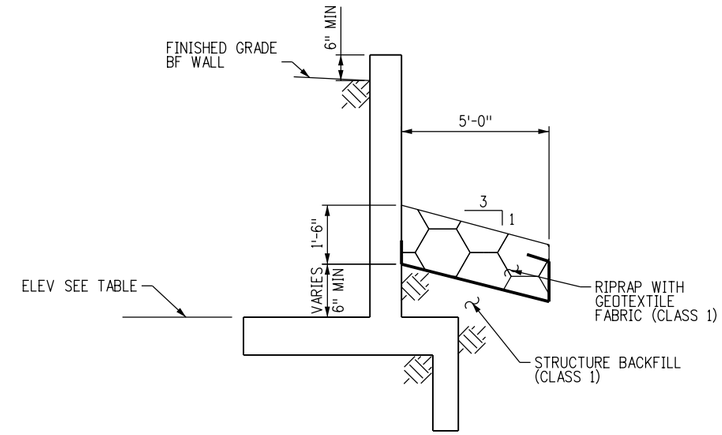

RIPRAP DETAIL-WINGWALL

STRUCTURE EXCAVATION LIMITS

STRUCTURE BACKFILL LIMITS (CLASS 1)

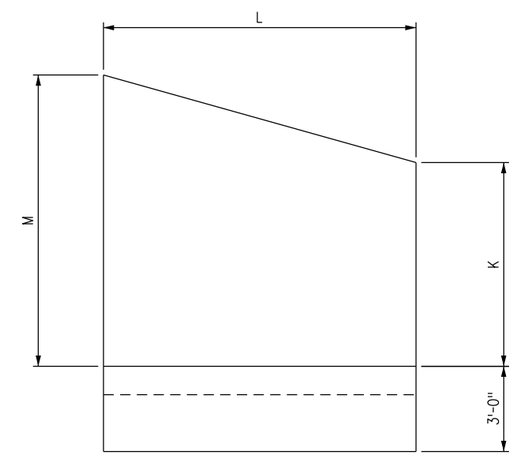

WINGWALL DETAIL

NOTES:

1. WING WALLS SHALL BE DESIGNED ACCORDING TO CDOT STANDARD M-601-20, UNLESS OTHERWISE NOTED ON THE PLANS.
2. FACE OF WING WALL TO ALIGN WITH INSIDE FACE OF PRECAST/CIP STRUCTURE. WHERE PRECAST STRUCTURE DOES NOT HAVE VERTICAL LEGS, SIDE FLANGE WALL SHALL BE PROVIDED BY PRECAST SUPPLIER & SHALL COORDINATE WITH CONTRACTOR.
3. 3" DIAMETER DRAIN HOLES IN WING WALLS SHALL BE LOCATED 4'-0" ABOVE FOOTING, 4'-0" FROM CULVERT.
4. EXCAVATION AND BACKFILL FOR THE HEADWALLS AND CBC SHALL BE IN ACCORDANCE WITH THE CDOT STANDARD M-206-1 UNLESS OTHERWISE SHOWN ON THE PLANS.
5. PRECASTER TO COORDINATE CIP & PRECAST (INSTALL ONLY) CBC CONNECTIONS.

60% REVIEW SET

60%

CALL UTILITY NOTIFICATION CENTER OF COLORADO

811

CALL 2-BUSINESS DAYS IN ADVANCE BEFORE YOU DIG, GRADE, OR EXCAVATE FOR THE MARKING OF UNDERGROUND MEMBER UTILITIES

REVISIONS:	NO.	DATE	REVISION DESCRIPTION:

BOULDER COUNTY TRANSPORTATION DEPARTMENT
ENGINEERING DIVISION

AECOM

DESIGNED:	CAD:	CHECKED:	DATE:
MFV	MFV	SBH	01/22/2016

JAMES CANYON STRUCTURES DETAILS

PROJECT NO: SEPT12C24 SEPT12C91 | SHEET NO: 25

stahrj 1/22/2016 10:39:26 AM L:\0048\900-CAD\02-SHEETS\S\James Canyon\BBCD-James-Final_CBC-D.dgn

CASTLE GULCH HYDRAULIC DATA:
DA = 444 AC
Q100 = 621.7 CFS
HW = 6492.00
Q10 = 272.8 CFS (DESIGN)
DHW = 6487.32
AHW = 6492.50

WINGWALL DIMENSIONS

①	L = 9.00' M = 8.70' K = 4.75'	③	L = 10.00' M = 8.21' K = 4.00'
②	L = 12.00' M = 8.70' K = 3.75'	④	L = 12.00' M = 8.21' K = 5.00'

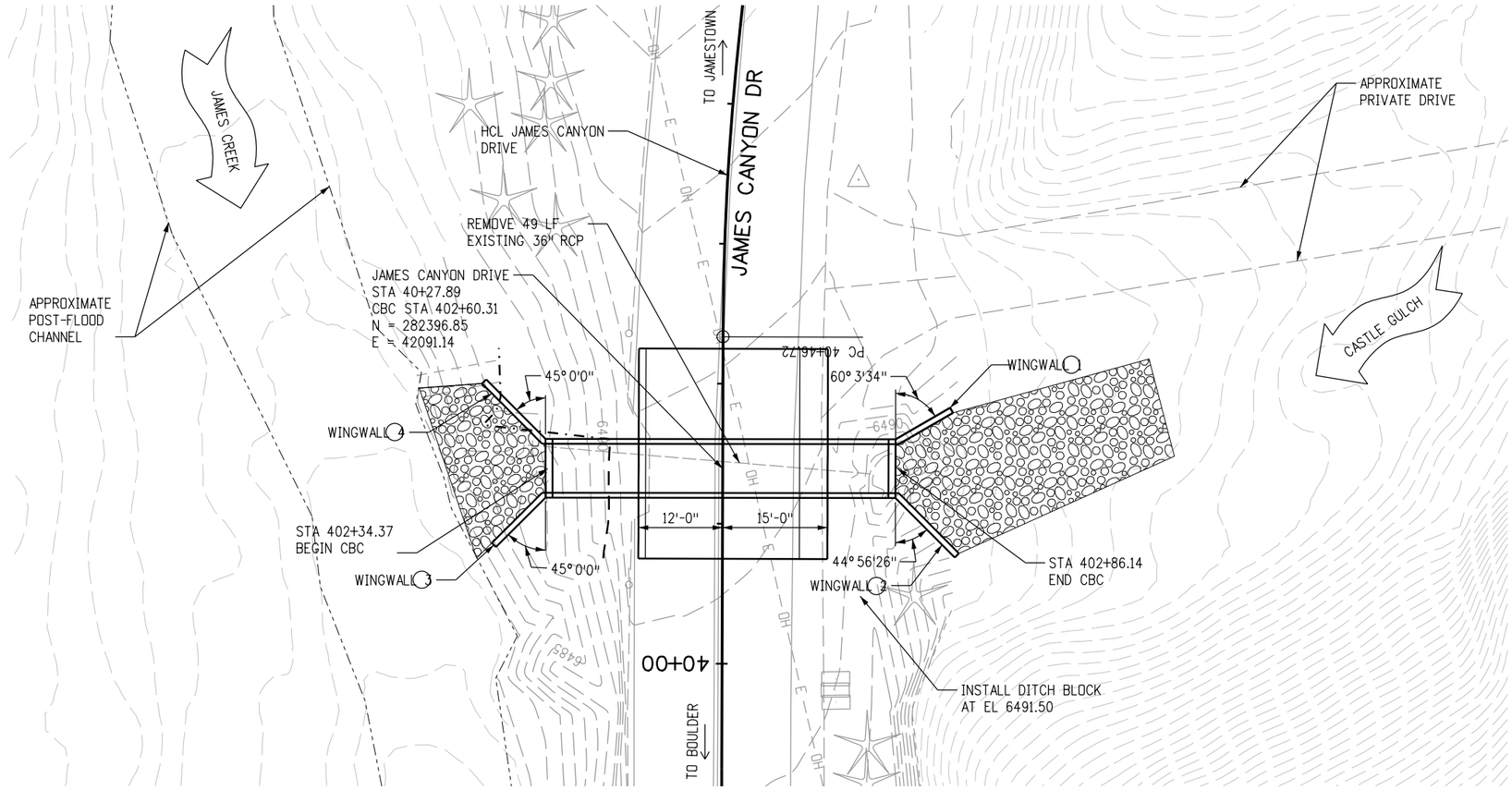

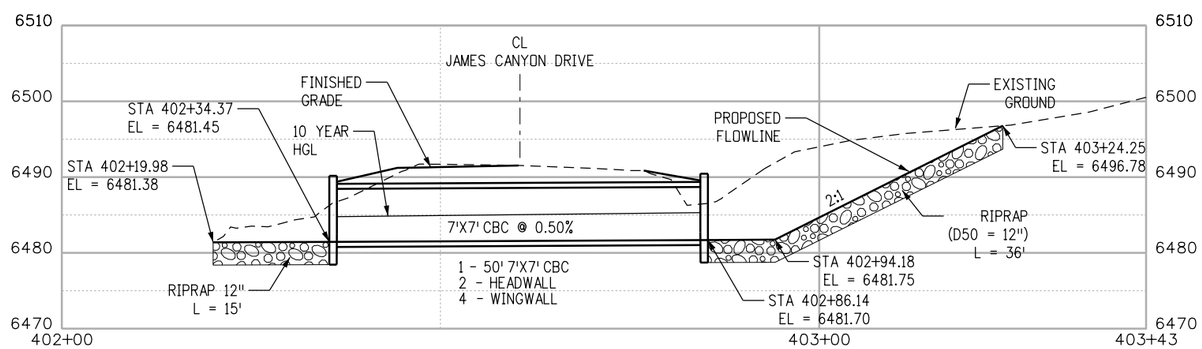

60% REVIEW SET

0' 10' 20' 40'

N

60%

CALL UTILITY NOTIFICATION CENTER OF COLORADO
811
CALL 2-BUSINESS DAYS IN ADVANCE BEFORE YOU DIG, GRADE, OR EXCAVATE FOR THE MARKING OF UNDERGROUND MEMBER UTILITIES

REVISIONS:	NO.	DATE	REVISION DESCRIPTION:

BOULDER COUNTY TRANSPORTATION DEPARTMENT
ENGINEERING DIVISION
AECOM

DESIGNED:	CAD:	CHECKED:	DATE:
CLK	CLK	SKL	01/22/2016

JAMES CANYON
CASTLE GULCH
CBC PLAN & PROFILE

PROJECT NO: SEPT12C24 SEPT12C91 SHEET NO: 26

stahr;1/22/2016 10:40:41 AM L:\0048\900-CAD\02-SHEETS\S\James Canyon\BOCD-James-Final_CBC-PnP01.dgn

JENKS GULCH HYDRAULIC DATA:
DA = 230 AC
Q100 = 396.7 CFS
HW = 6795.37
Q10 = 175.2 CFS (DESIGN)
DHW = 6791.99
AHW = 6797.14

WINGWALL DIMENSIONS

①	L = 8.00' M = 8.20' K = 6.00'	③	L = 9.00' M = 8.21' K = 4.00'
②	L = 10.00' M = 8.20' K = 4.00'	④	L = 10.00' M = 8.21' K = 3.00'

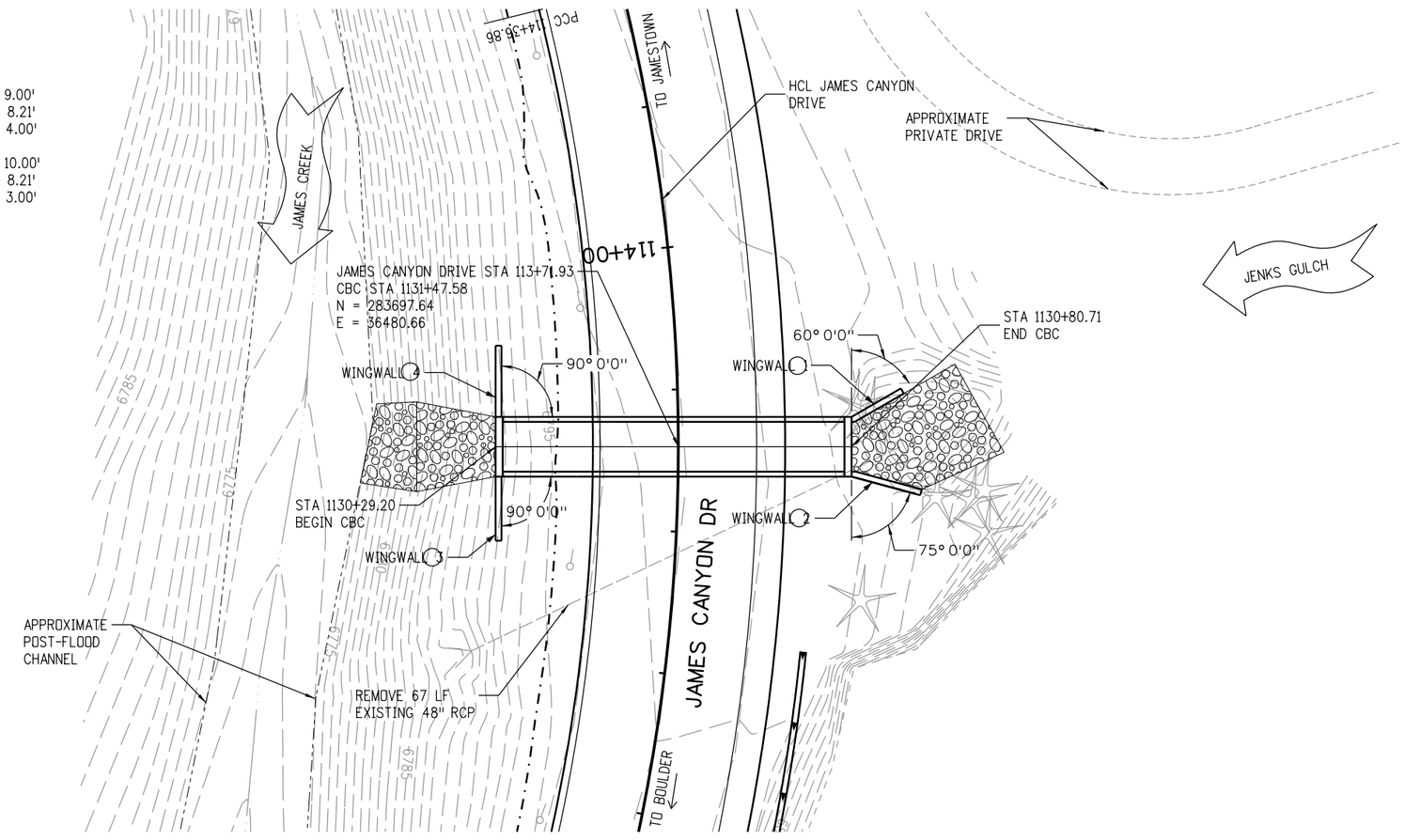

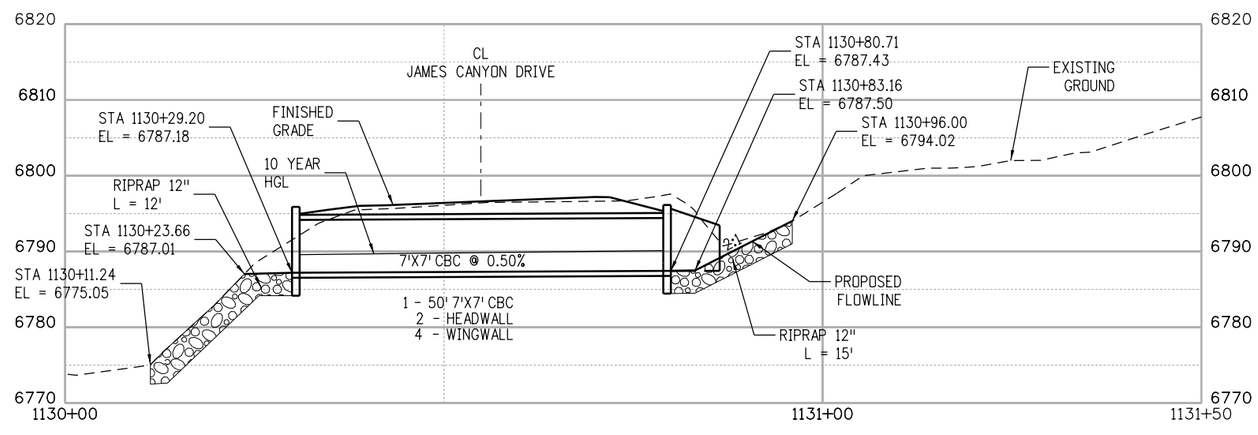

60% REVIEW SET

0' 10' 20' 40'

N

60%

CALL UTILITY NOTIFICATION CENTER OF COLORADO
811
CALL 2-BUSINESS DAYS IN ADVANCE BEFORE YOU DIG, GRADE, OR EXCAVATE FOR THE MARKING OF UNDERGROUND MEMBER UTILITIES

REVISIONS:	NO.	DATE	REVISION DESCRIPTION:

BOULDER COUNTY TRANSPORTATION DEPARTMENT
ENGINEERING DIVISION
AECOM

DESIGNED:	CAD:	CHECKED:	DATE:
CLK	CLK	SKL	01/22/2016

JAMES CANYON
JENKS GULCH
CBC PLAN & PROFILE

PROJECT NO: SEPT12C24 SEPT12C91 SHEET NO: 27

stahrj 1/22/2016 10:40:45 AM L:\0048\900-CAD\02-SHEETS\S\James Canyon\BOCO-James-Final_CBC-PnP02.dgn

HILL GULCH HYDRAULIC DATA:
DA = 261 AC
Q100 = 445.7 CFS
HW = 6858.57
Q10 = 220.5 CFS (DESIGN)
DHW = 6855.16
AHW = 6860.59

WINGWALL DIMENSIONS

①	L = 9.00' M = 8.19' K = 5.00''	③	L = 8.00' M = 8.21' K = 5.00'
②	L = 4.00' M = 8.19' K = 10.00'	④	L = 13.00' M = 8.21' K = 4.83'

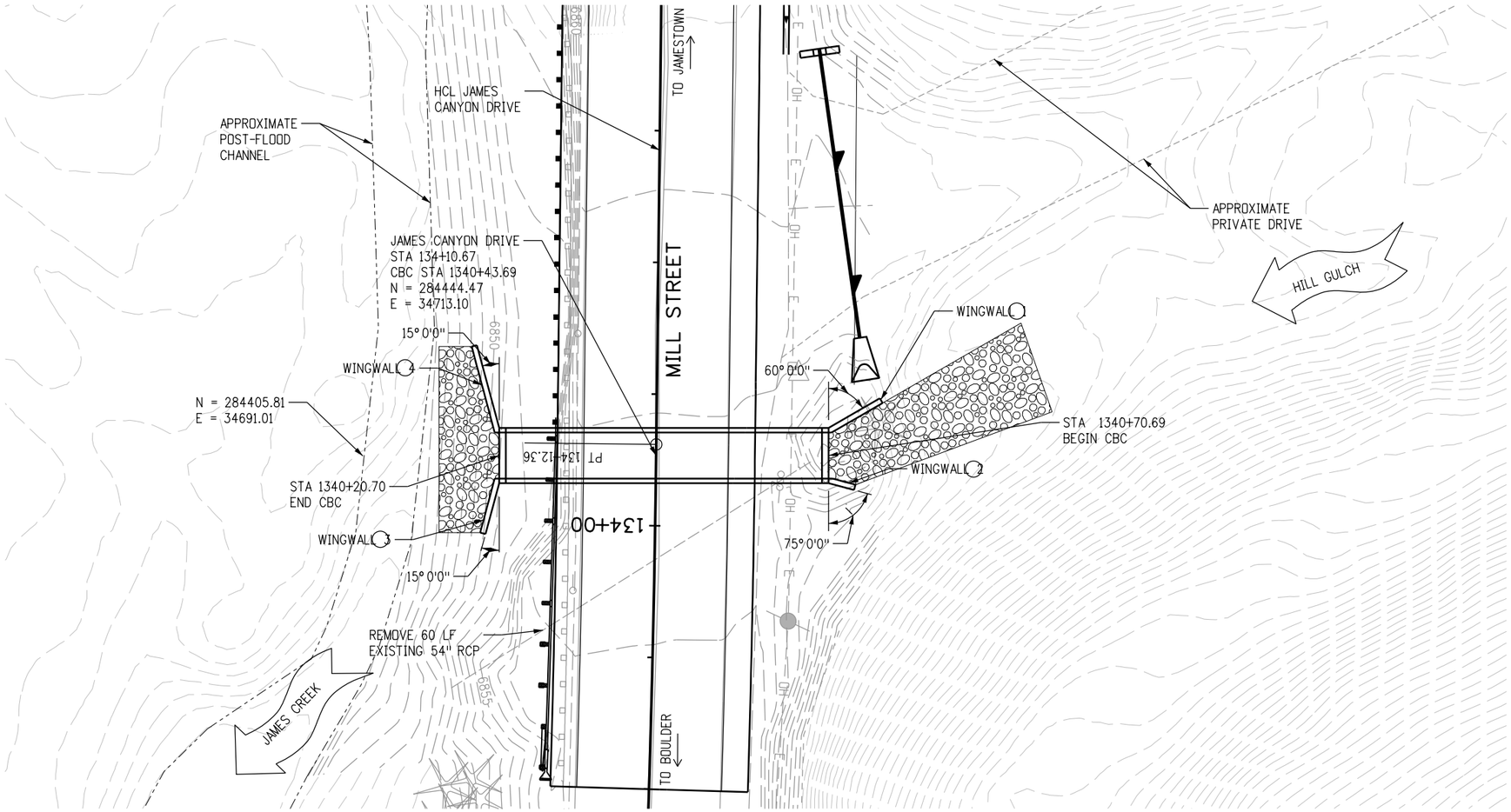

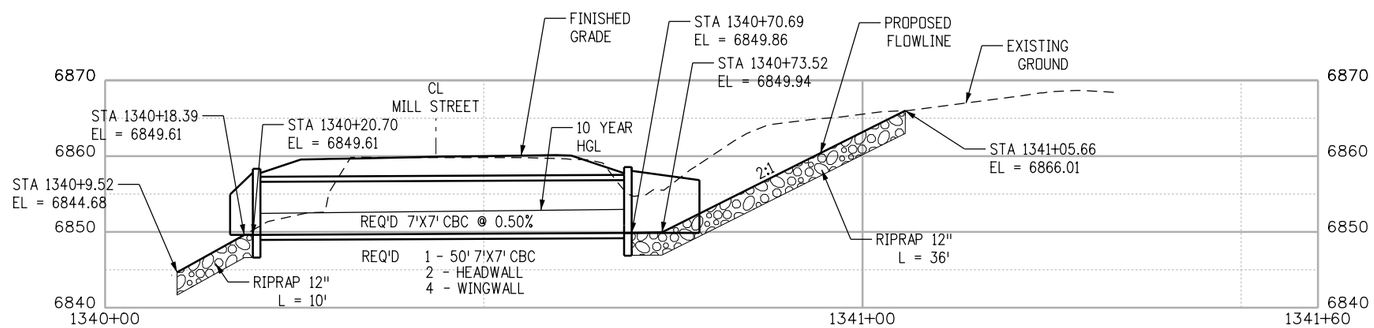

60% REVIEW SET

0' 10' 20' 40'

60%

CALL UTILITY NOTIFICATION CENTER OF COLORADO
811
CALL 2-BUSINESS DAYS IN ADVANCE BEFORE YOU DIG, GRADE, OR EXCAVATE FOR THE MARKING OF UNDERGROUND MEMBER UTILITIES

REVISIONS:	NO.	DATE	REVISION DESCRIPTION:

BOULDER COUNTY TRANSPORTATION DEPARTMENT
ENGINEERING DIVISION
AECOM

DESIGNED:	CAD:	CHECKED:	DATE:
CLK	CLK	SKL	01/22/2016

JAMES CANYON
HILL GULCH
CBC PLAN & PROFILE

PROJECT NO: SEPT12C24 SEPT12C91 | SHEET NO: 28

stahrj 1/22/2016 10:40:56 AM L:\0048\900-CAD\02-SHEETS\S\James Canyon\BOCO-James-Final_CBC-PnP03.dgn

LITTLE JAMES CREEK HYDRAULIC DATA:
DA = X.XX MI²
Q100 = XXXX CFS
HW = XXXX.X
Q10 = XXX CFS (DESIGN)
DHW = XXXX.X
AHW = XXXX.X

WINGWALL DIMENSIONS

①	L = 11.2' M = 8.17' K = 4.83'	③	L = 20.3' M = 8.17' K = 4.83'
②	L = 11.2' M = 8.17' K = 4.83'	②	L = 19.3' M = 8.17' K = 4.83'

SOIL RIPRAP LIMITS

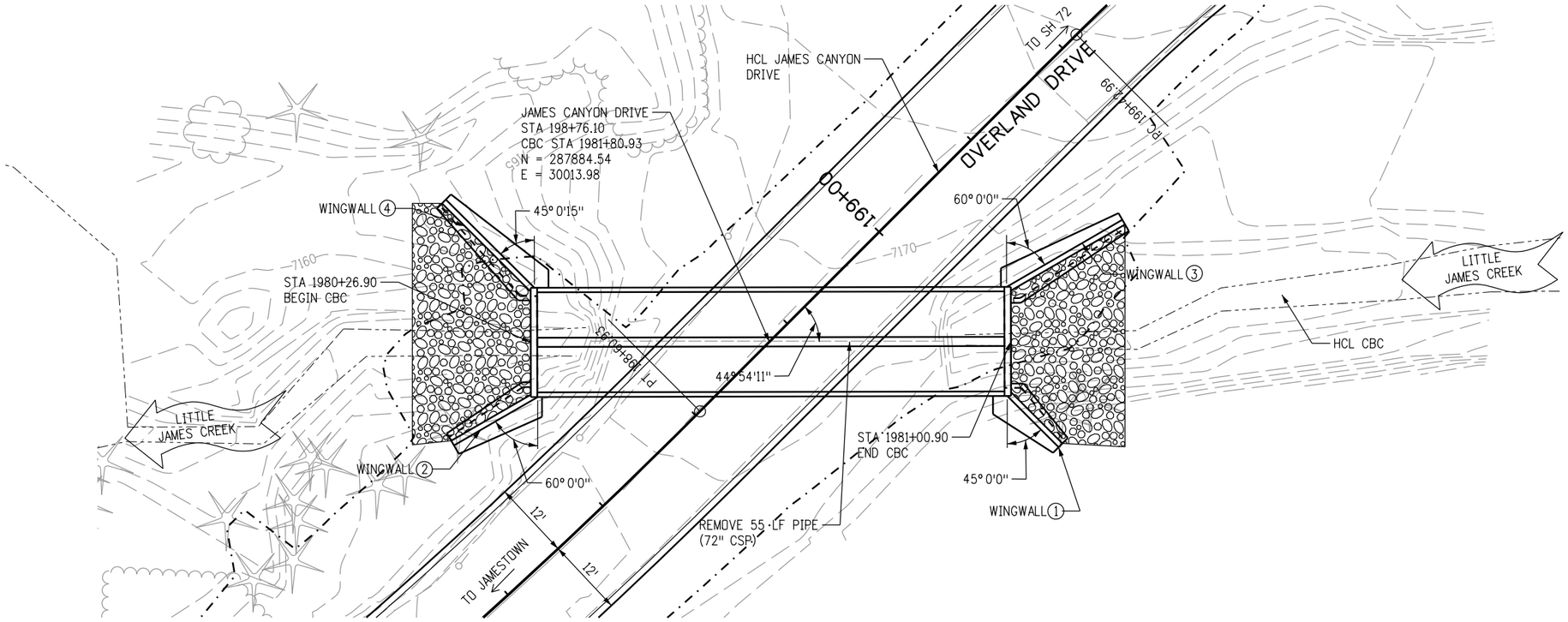

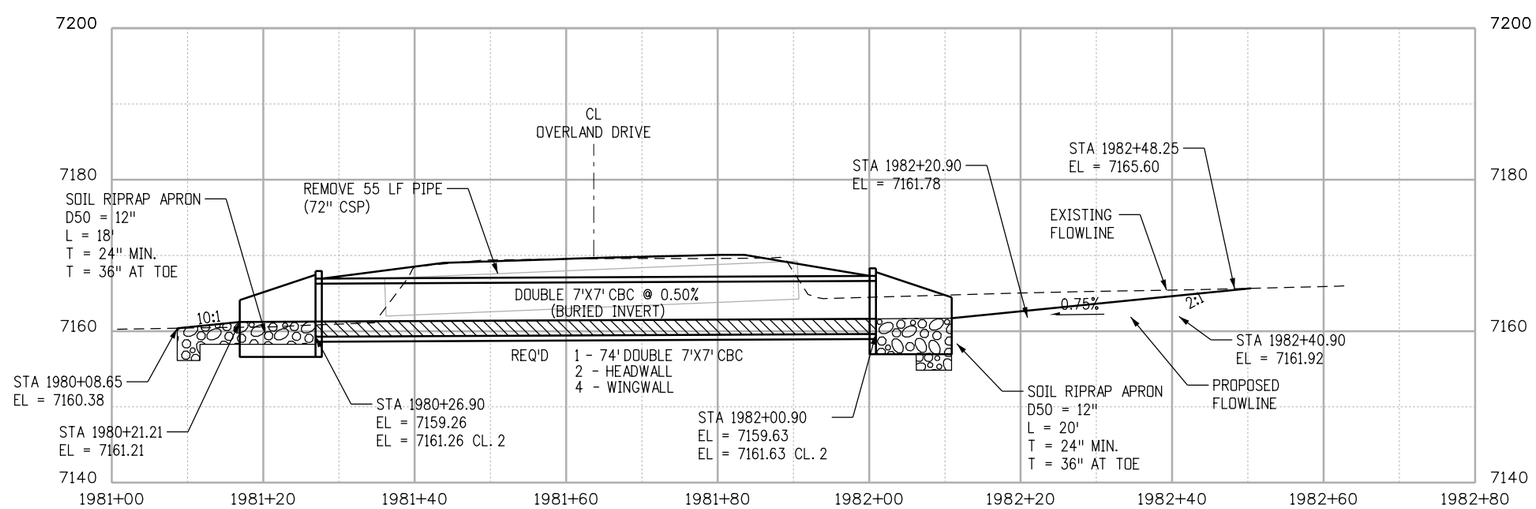

60% REVIEW SET

0' 50' 100' 200'

60%

CALL UTILITY NOTIFICATION CENTER OF COLORADO
811
CALL 2-BUSINESS DAYS IN ADVANCE BEFORE YOU DIG, GRADE, OR EXCAVATE FOR THE MARKING OF UNDERGROUND MEMBER UTILITIES

REVISIONS:	NO.	DATE	REVISION DESCRIPTION:

Boulder County

BOULDER COUNTY TRANSPORTATION DEPARTMENT
ENGINEERING DIVISION

AECOM

DESIGNED:	CAD:	CHECKED:	DATE:
MTC	MTC	SKL	01/22/2016

JAMES CANYON
CBC PLAN & PROFILE

PROJECT NO: SEPT12C24 SEPT12C91
SHEET NO: 29

stahrj 1/22/2016 10:40:59 AM L:\0048\900-CAD\02-SHEETS\S\James Canyon\BOCD-James-Final_CBC-PnP04.dgn

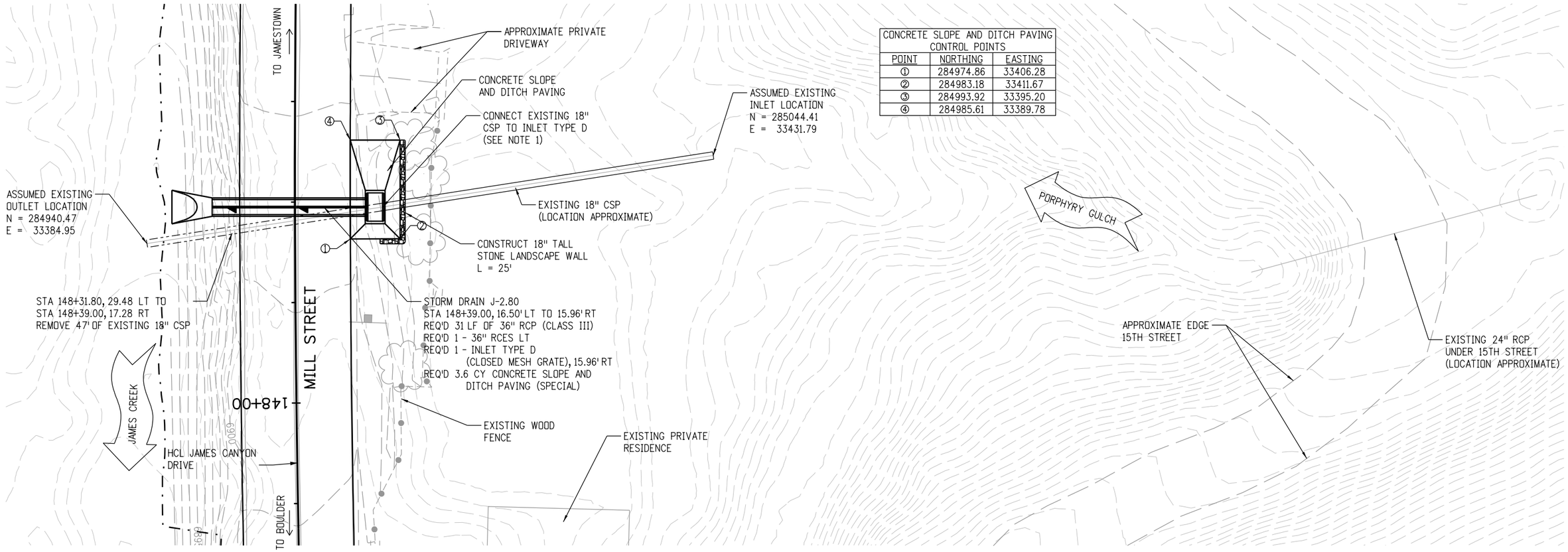

CONCRETE SLOPE AND DITCH PAVING CONTROL POINTS		
POINT	NORTHING	EASTING
①	284974.86	33406.28
②	284983.18	33411.67
③	284993.92	33395.20
④	284985.61	33389.78

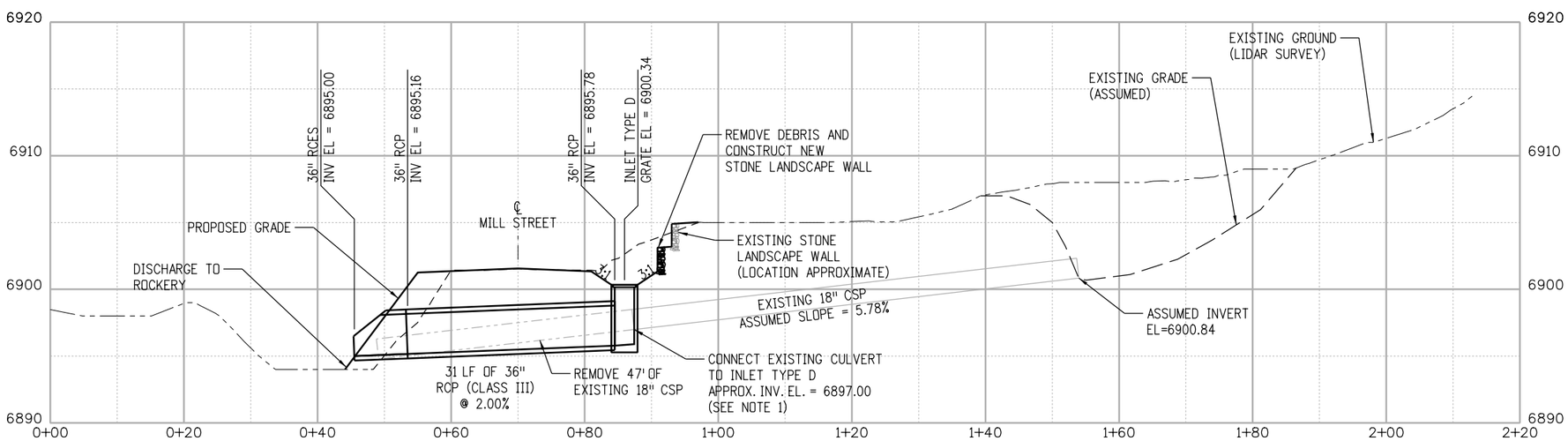

STORM DRAIN J-2.80

CROSSING STA 148+39.00

NOTES:

1. EXISTING CULVERT LOCATION IS ASSUMED BASED ON PRELIMINARY FIELD MEASUREMENTS. FIELD VERIFY LOCATION AND INVERT OF EXISTING CULVERT AND ADJUST LOCATION OF INLET TYPE D AND PROPOSED CULVERT AS REQUIRED FOR CONNECTION. MAINTAIN GRATE ELEVATION AND CULVERT SLOPE AS SHOWN.

60% REVIEW SET

0' 10' 20' 40'

60%

CALL UTILITY NOTIFICATION CENTER OF COLORADO
811
CALL 2-BUSINESS DAYS IN ADVANCE BEFORE YOU DIG, GRADE, OR EXCAVATE FOR THE MARKING OF UNDERGROUND MEMBER UTILITIES

REVISIONS:	NO.	DATE	REVISION DESCRIPTION:

BOULDER COUNTY TRANSPORTATION DEPARTMENT
ENGINEERING DIVISION
AECOM

DESIGNED:	CAD:	CHECKED:	DATE:
MTC	MTC	SKL	01/22/2016

JAMES CANYON
STORM DRAIN J-2.80
PLAN & PROFILE

PROJECT NO: SEPT12C24 SEPT12C91 SHEET NO: 30

stahrj 1/22/2016 10:42:56 AM L:\0048\900-CAD\02-SHEETS\H\BOCD-James-Final\BOCD-James-Final_DRPR06.dgn

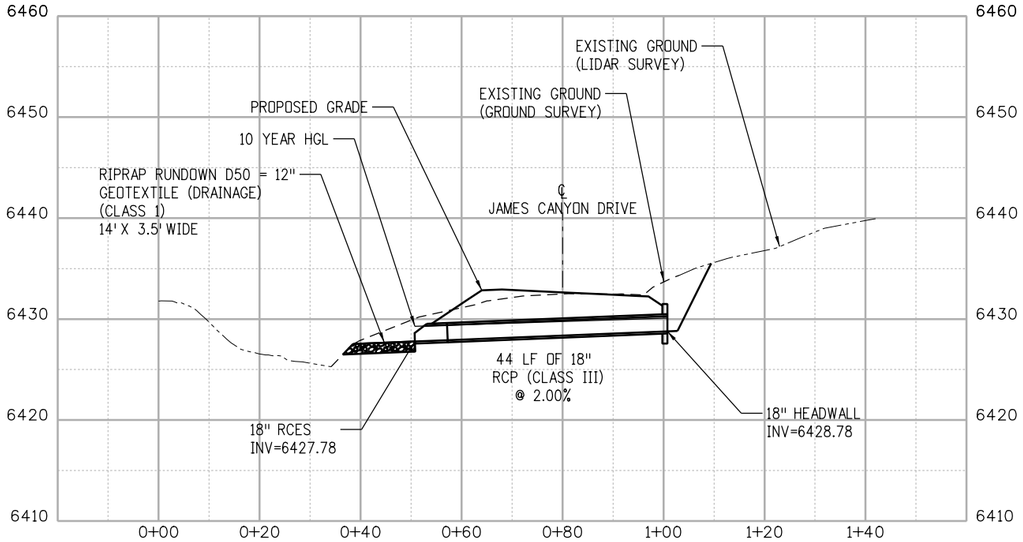

CULVERT J-0.44

CROSSING STA 23+45.00

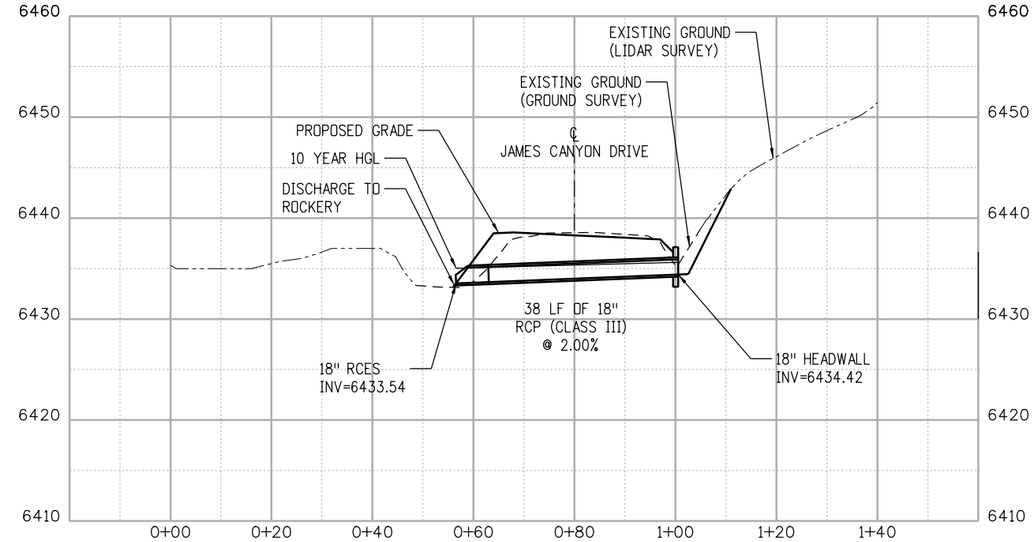

CULVERT J-0.47

CROSSING STA 25+05.00

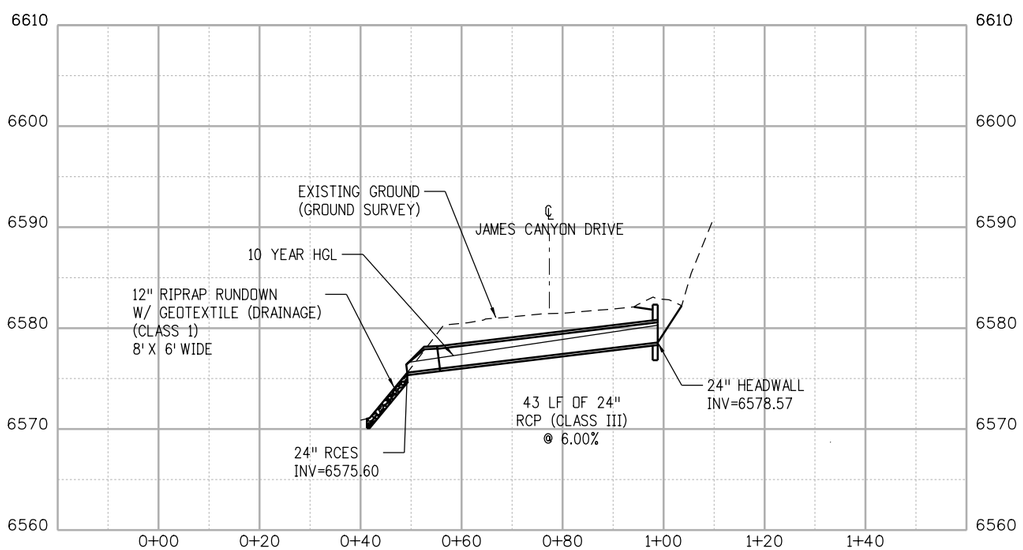

CULVERT J-1.13

CROSSING STA 59+99.00

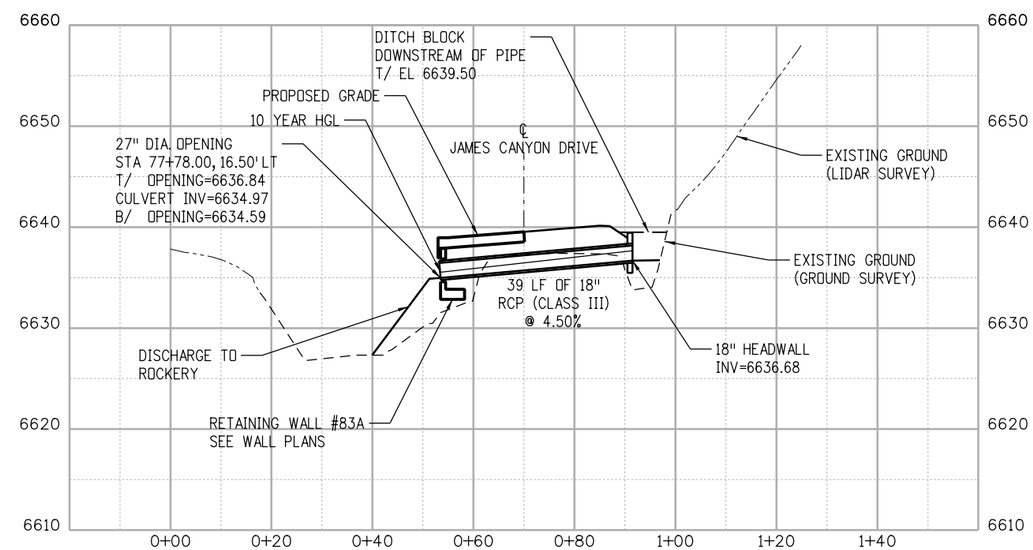

CULVERT J-1.46

CROSSING STA 77+78.00

60% REVIEW SET

60%

CALL UTILITY NOTIFICATION CENTER OF COLORADO

811

CALL 2-BUSINESS DAYS IN ADVANCE BEFORE YOU DIG, GRADE, OR EXCAVATE FOR THE MARKING OF UNDERGROUND MEMBER UTILITIES

REVISIONS:	NO.	DATE	REVISION DESCRIPTION:

Boulder County

AECOM

BOULDER COUNTY TRANSPORTATION DEPARTMENT
ENGINEERING DIVISION

DESIGNED:	CAD:	CHECKED:	DATE:
MTC	MTC	SKL	01/22/2016

JAMES CANYON
CROSS CULVERT PROFILES

PROJECT NO: SEPT12C24 SEPT12C91

SHEET NO: 31

stahrj 1/22/2016 10:41:00 AM L:\0048\900-CAD\02-SHEETS\H\BOCD-James-Final\BOCD-James-Final_DRPR01.dgn

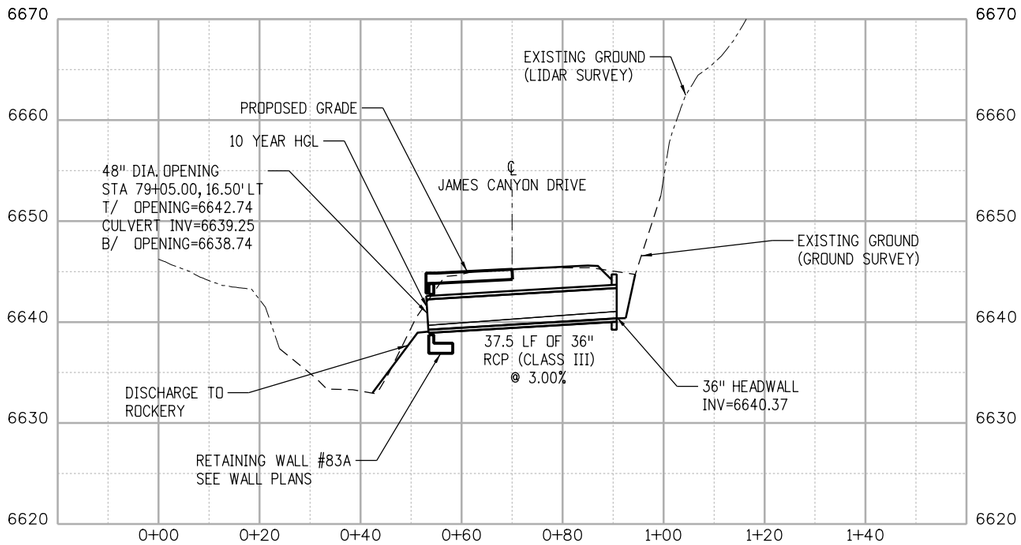

CULVERT J-1.47

CROSSING STA 79+05.00

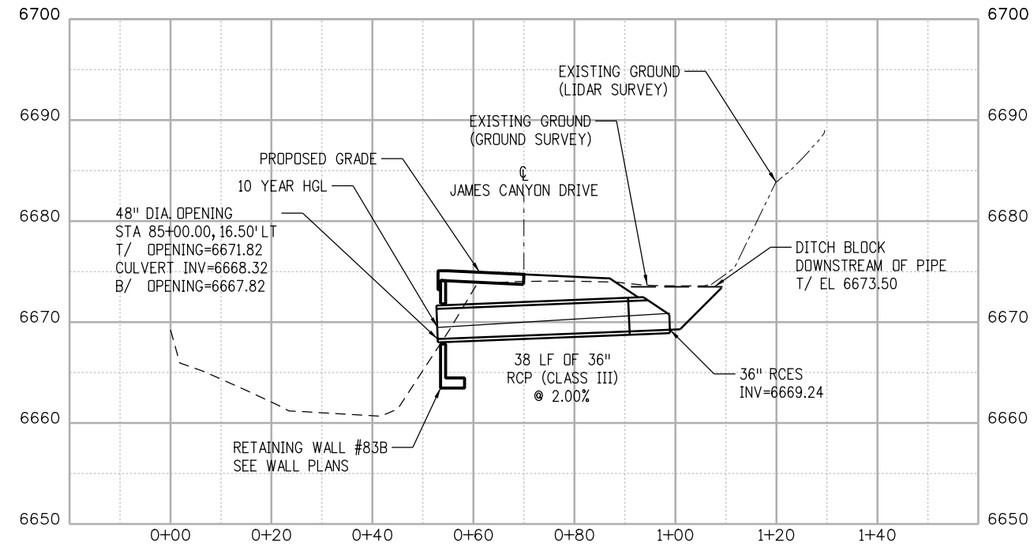

CULVERT J-1.63

CROSSING STA 85+00.00

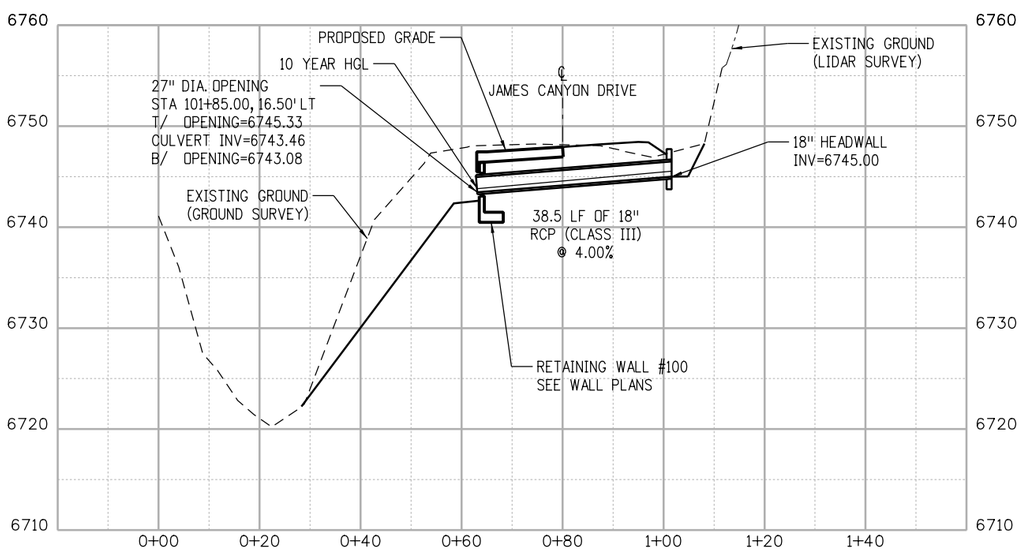

CULVERT J-1.89

CROSSING STA 101+85.00

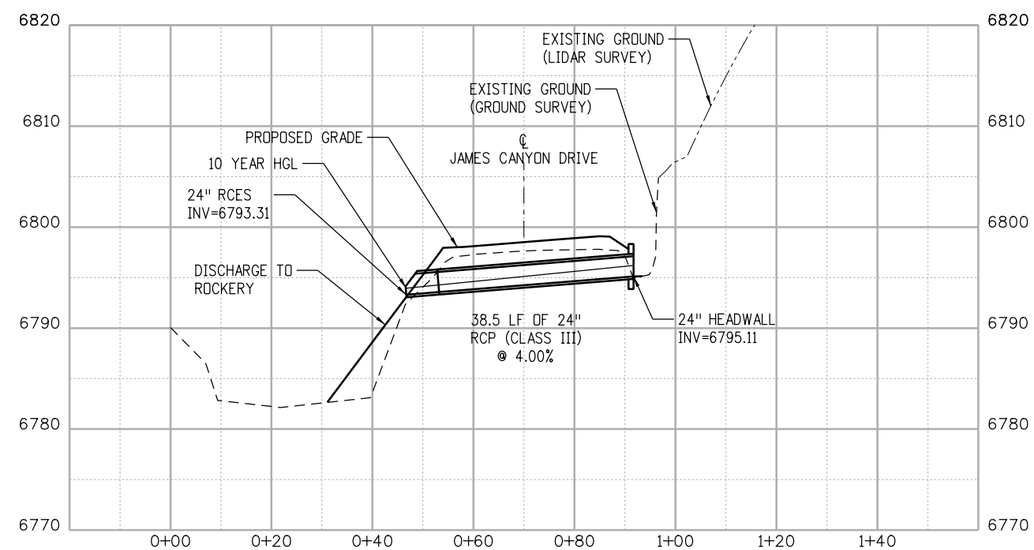

CULVERT J-2.20

CROSSING STA 116+23.00

60% REVIEW SET

60%

CALL UTILITY NOTIFICATION CENTER OF COLORADO

811

CALL 2-BUSINESS DAYS IN ADVANCE BEFORE YOU DIG, GRADE, OR EXCAVATE FOR THE MARKING OF UNDERGROUND MEMBER UTILITIES

REVISIONS:	NO.	DATE	REVISION DESCRIPTION:

Boulder County

AECOM

BOULDER COUNTY TRANSPORTATION DEPARTMENT
ENGINEERING DIVISION

DESIGNED:	CAD:	CHECKED:	DATE:
MTC	MTC	SKL	01/22/2016

JAMES CANYON
CROSS CULVERT PROFILES

PROJECT NO: SEPT12C24 SEPT12C91 | SHEET NO: 32

stahrj 1/22/2016 10:41:02 AM L:\0048\900-CAD\02-SHEETS\H\BOCO-James-Final\BOCO-James-Final_DRPRO2.dgn

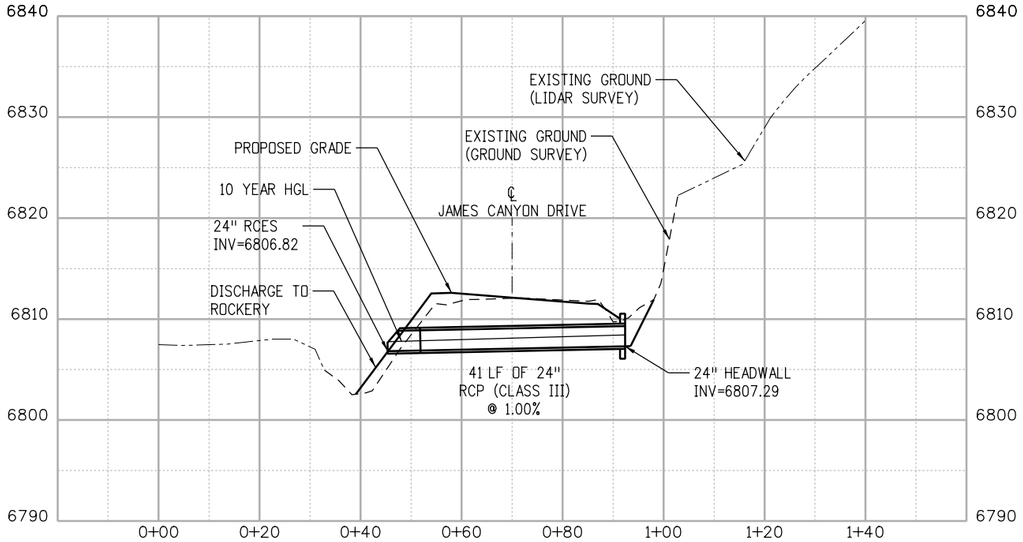

CULVERT J-2.29

CROSSING STA 121+26.00

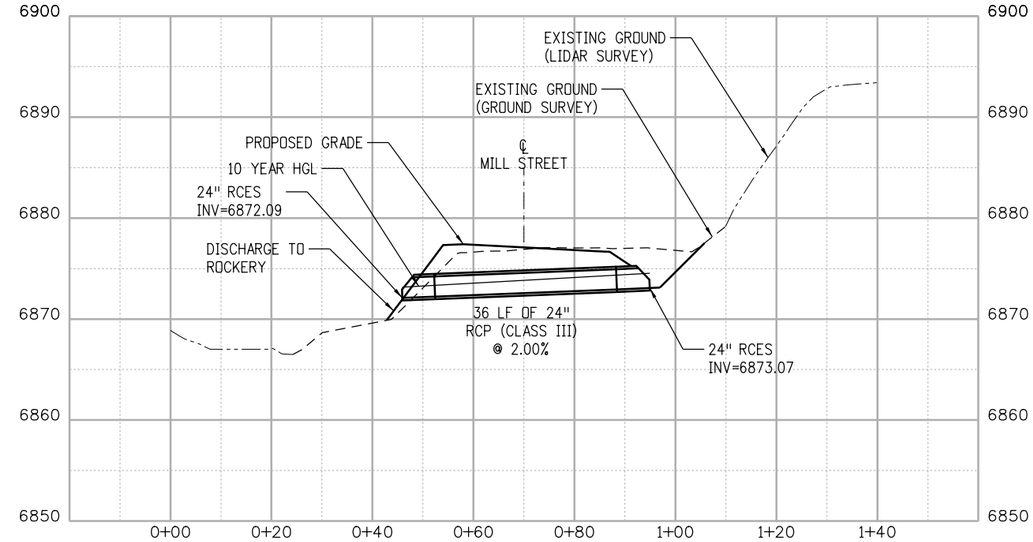

CULVERT J-2.68

CROSSING STA 140+68.00

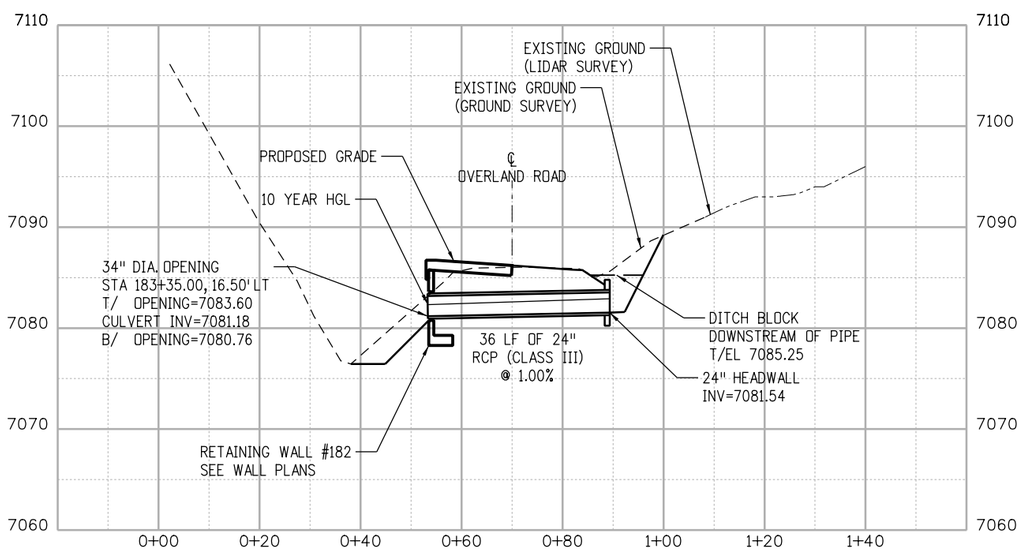

CULVERT J-3.48

CROSSING STA 183+35.00

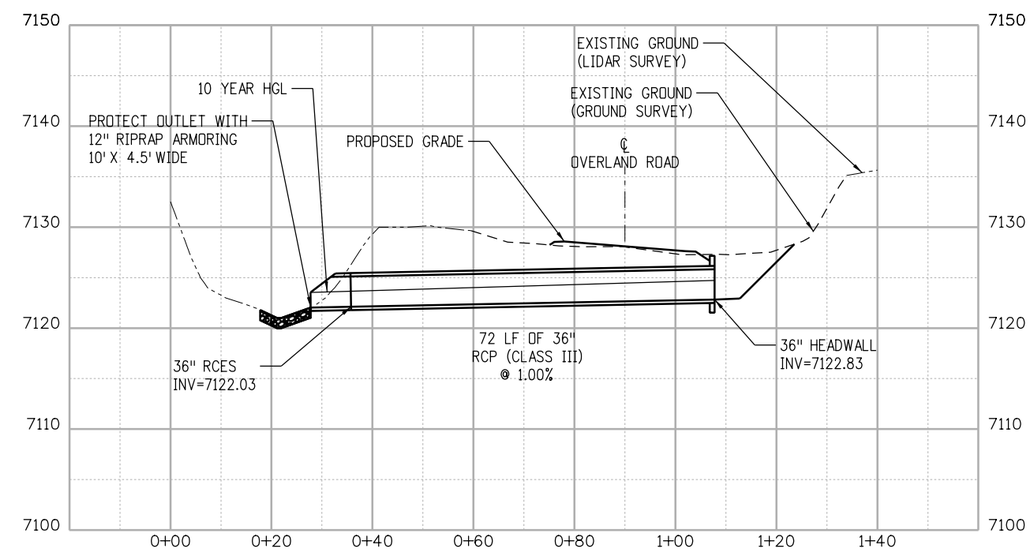

CULVERT J-3.62

CROSSING STA 190+88.00

60% REVIEW SET

60%

CALL UTILITY NOTIFICATION CENTER OF COLORADO

811

CALL 2-BUSINESS DAYS IN ADVANCE BEFORE YOU DIG, GRADE, OR EXCAVATE FOR THE MARKING OF UNDERGROUND MEMBER UTILITIES

REVISIONS:	NO.	DATE	REVISION DESCRIPTION:

Boulder County

AECOM

BOULDER COUNTY TRANSPORTATION DEPARTMENT
ENGINEERING DIVISION

DESIGNED:	CAD:	CHECKED:	DATE:
MTC	MTC	SKL	01/22/2016

JAMES CANYON
CROSS CULVERT PROFILES

PROJECT NO: SEPT12C24 SEPT12C91

SHEET NO: 33

stahrj 1/22/2016 10:41:07 AM L:\0048\900-CAD\02-SHEETS\H\BOCO-James-Final\BOCO-James-Final_DRPRO3.dgn

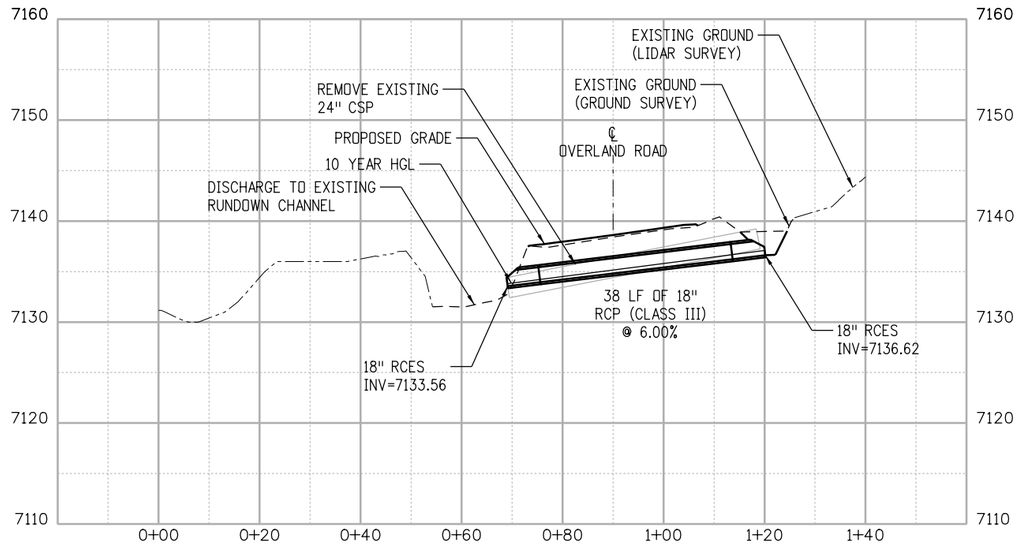

CULVERT J-3.64

CROSSING STA 192+46.00

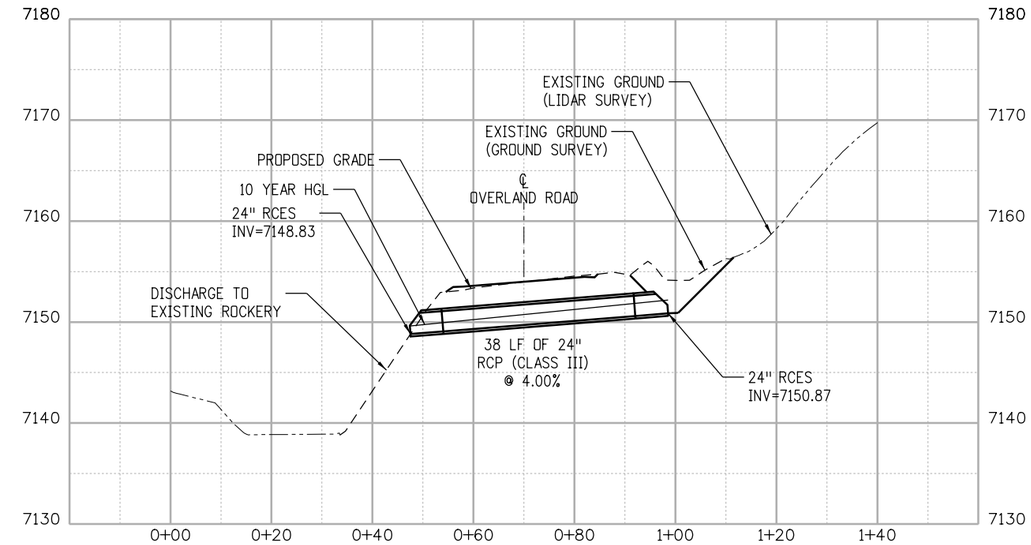

CULVERT J-3.68

CROSSING STA 194+35.00

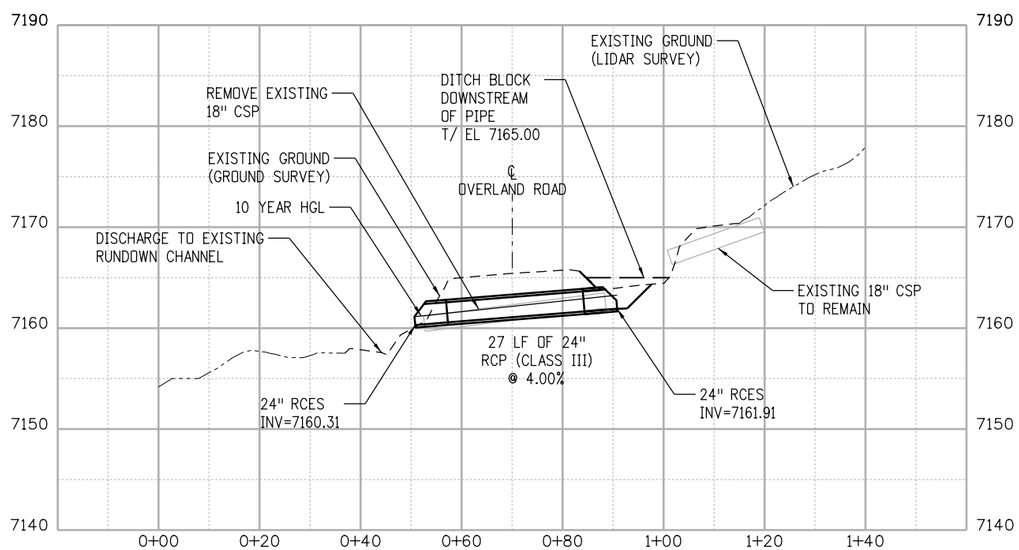

CULVERT J-3.74

CROSSING STA 197+24.00

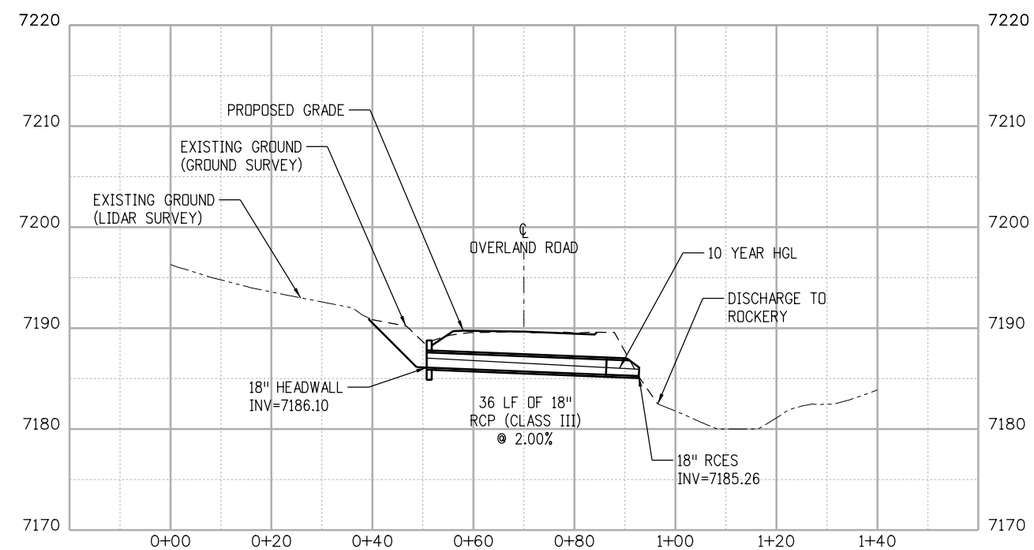

CULVERT J-3.81

CROSSING STA 202+85.00

60% REVIEW SET

60%

CALL UTILITY NOTIFICATION CENTER OF COLORADO

811

CALL 2-BUSINESS DAYS IN ADVANCE BEFORE YOU DIG, GRADE, OR EXCAVATE FOR THE MARKING OF UNDERGROUND MEMBER UTILITIES

REVISIONS:	NO.	DATE	REVISION DESCRIPTION:

BOULDER COUNTY TRANSPORTATION DEPARTMENT
ENGINEERING DIVISION

AECOM

DESIGNED:	CAD:	CHECKED:	DATE:
MTC	MTC	SKL	01/22/2016

JAMES CANYON
CROSS CULVERT PROFILES

PROJECT NO: SEPT12C24 SEPT12C91

SHEET NO: 34

stahrj 1/22/2016 10:41:08 AM L:\0048\900-CAD\02-SHEETS\H\BOCO-James-Final\BOCO-James-Final_DRPR04.dgn

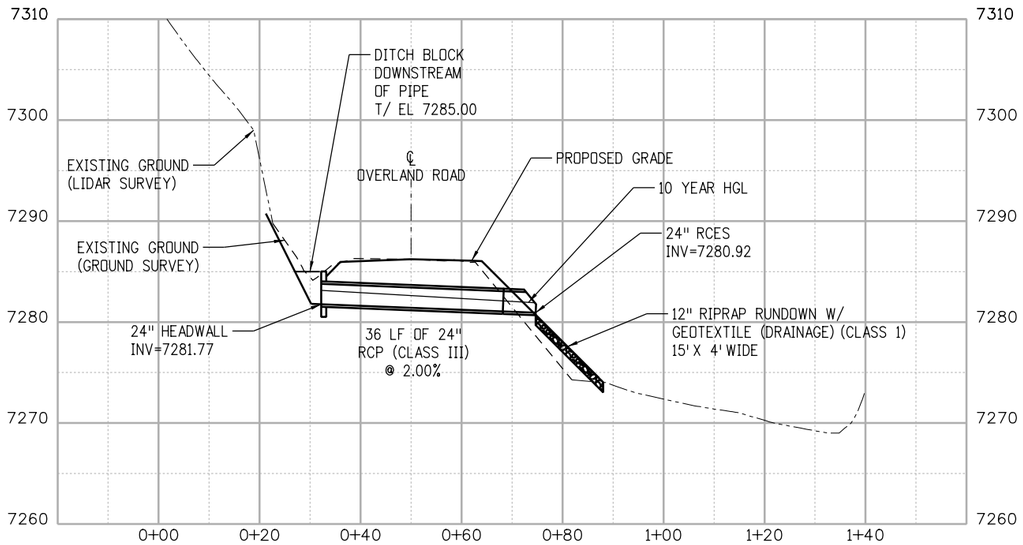

CULVERT J-4.16

CROSSING STA 219+00.00

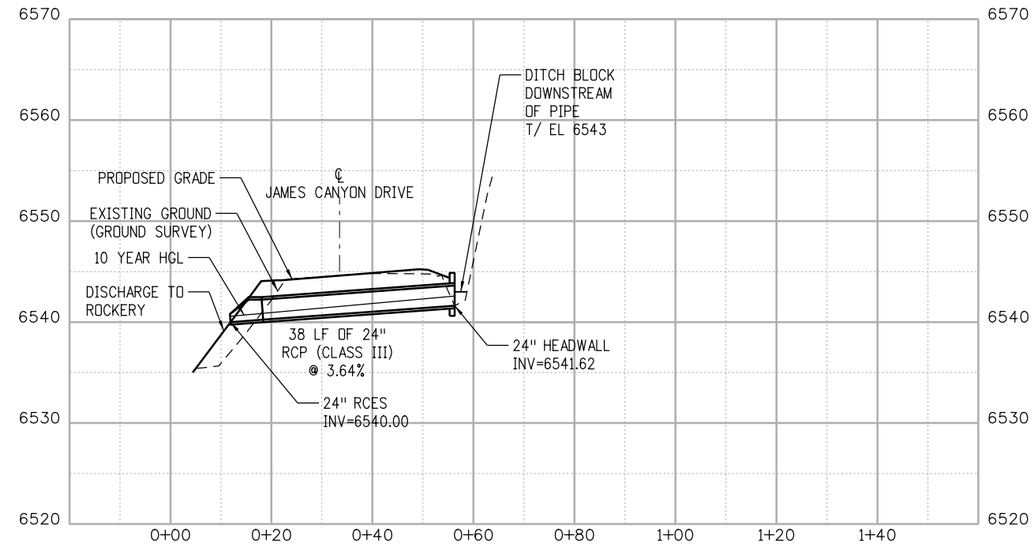

CULVERT J-0.97

CROSSING STA 51+32.00

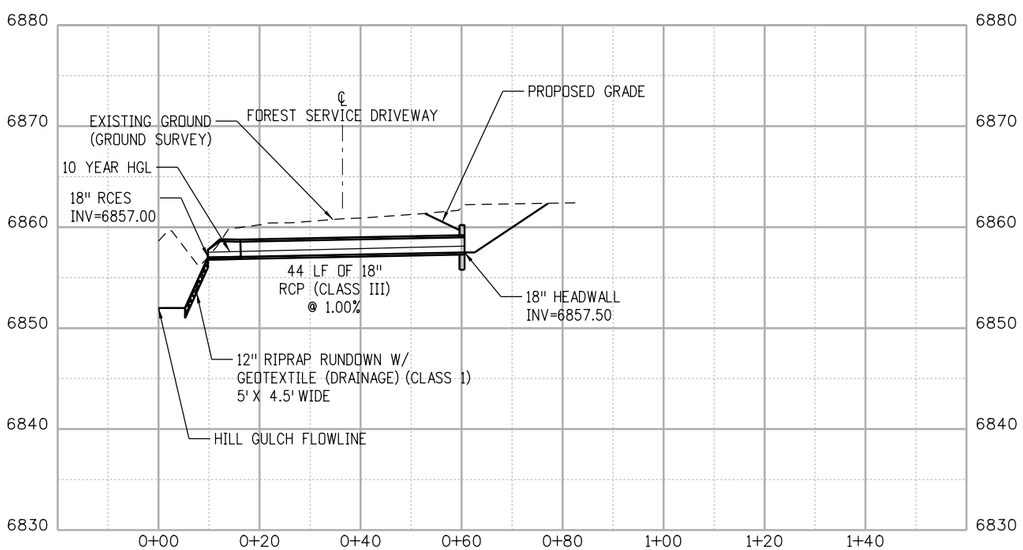

CULVERT J-2.44

CROSSING STA 134+72.00

60% REVIEW SET

60%

CALL UTILITY NOTIFICATION CENTER OF COLORADO

811

CALL 2-BUSINESS DAYS IN ADVANCE BEFORE YOU DIG, GRADE, OR EXCAVATE FOR THE MARKING OF UNDERGROUND MEMBER UTILITIES

REVISIONS:	NO.	DATE	REVISION DESCRIPTION:

Boulder County

AECOM

BOULDER COUNTY TRANSPORTATION DEPARTMENT
ENGINEERING DIVISION

DESIGNED:	CAD:	CHECKED:	DATE:
MTC	MTC	SKL	01/22/2016

JAMES CANYON
CROSS CULVERT PROFILES

PROJECT NO: SEPT12C24 SEPT12C91

SHEET NO: 35

stahrj 1/22/2016 10:41:15 AM L:\0048\900-CAD\02-SHEETS\H\BOCD-James-Final\BOCD-James-Final_DRPR05.dgn