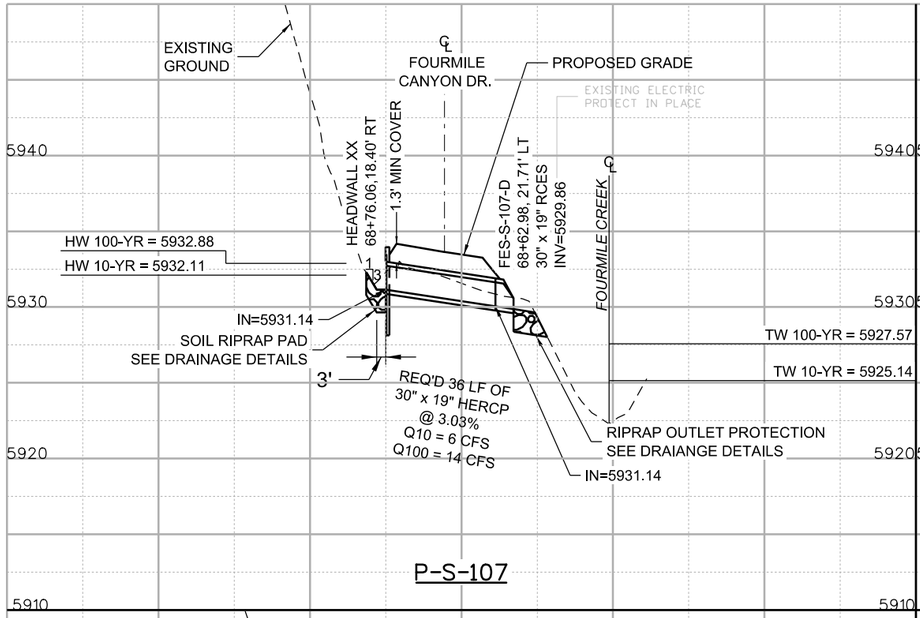

P-S-107

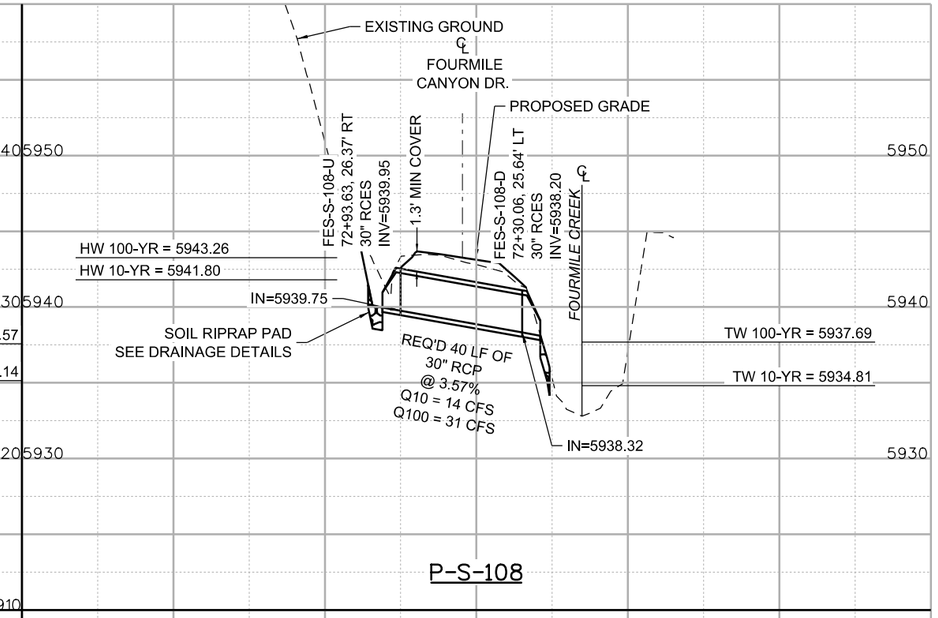

P-S-108

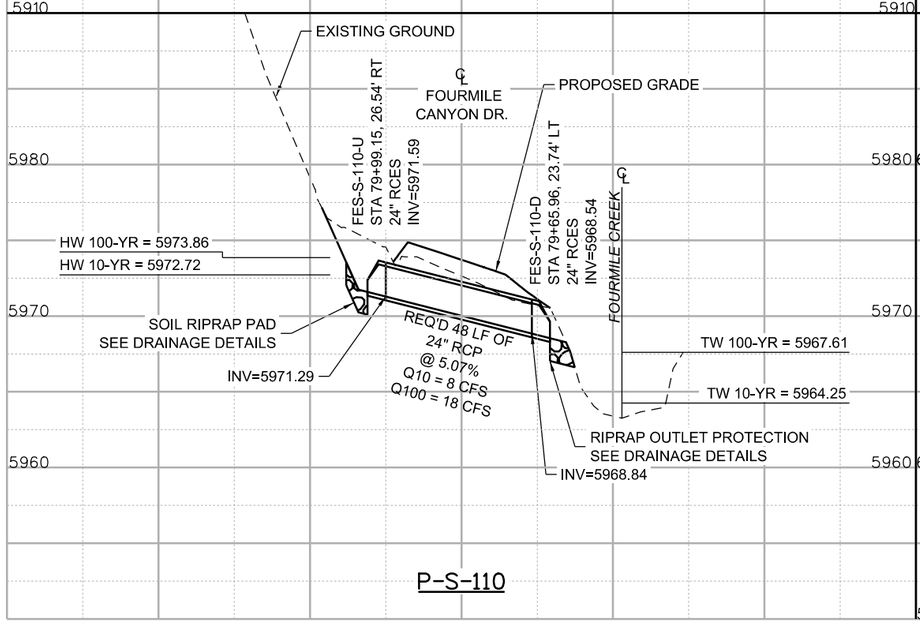

P-S-110

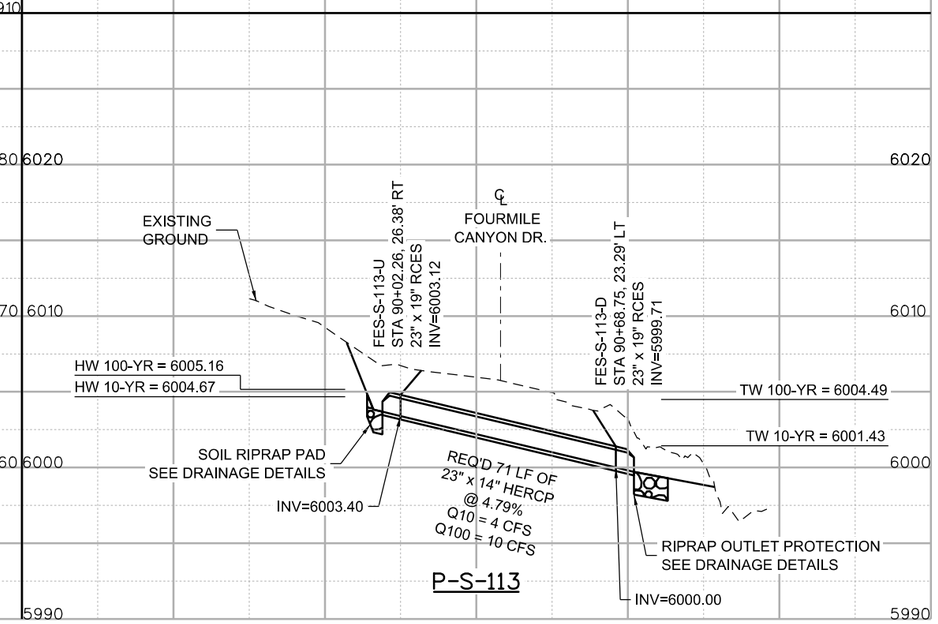

P-S-113

60% SET

CALL UTILITY NOTIFICATION CENTER OF COLORADO
811
CALL 2-BUSINESS DAYS IN ADVANCE BEFORE YOU DIG, GRADE, OR EXCAVATE FOR THE MARKING OF UNDERGROUND MEMBER UTILITIES

REVISIONS:	NO.	DATE	REVISION DESCRIPTION:

BOULDER COUNTY TRANSPORTATION DEPARTMENT
ENGINEERING DIVISION
Boulder County
Michael Baker INTERNATIONAL

DESIGNED:	CAD:	CHECKED:	DATE:
JAM	EMR		05/11/16

FOURMILE CANYON DR (SOUTH)
DRAINAGE PROFILES (2 OF 2)

PROJECT NO: 4043.SEPT12C36 | SHEET NO: 131

edgar.robles 5:57:44 PM 8/30/2016 pw:\\DCPWAPP1.bkr.mbakercorp.com:pwprod\Documents\Projects\Lakewood_Office\Boulder_County_Emergency_Transportation\T03\08_Sheet_Files\02_Hydraulics\DGN\South\Fourmile_S_Hydr_Profiles02.dgn

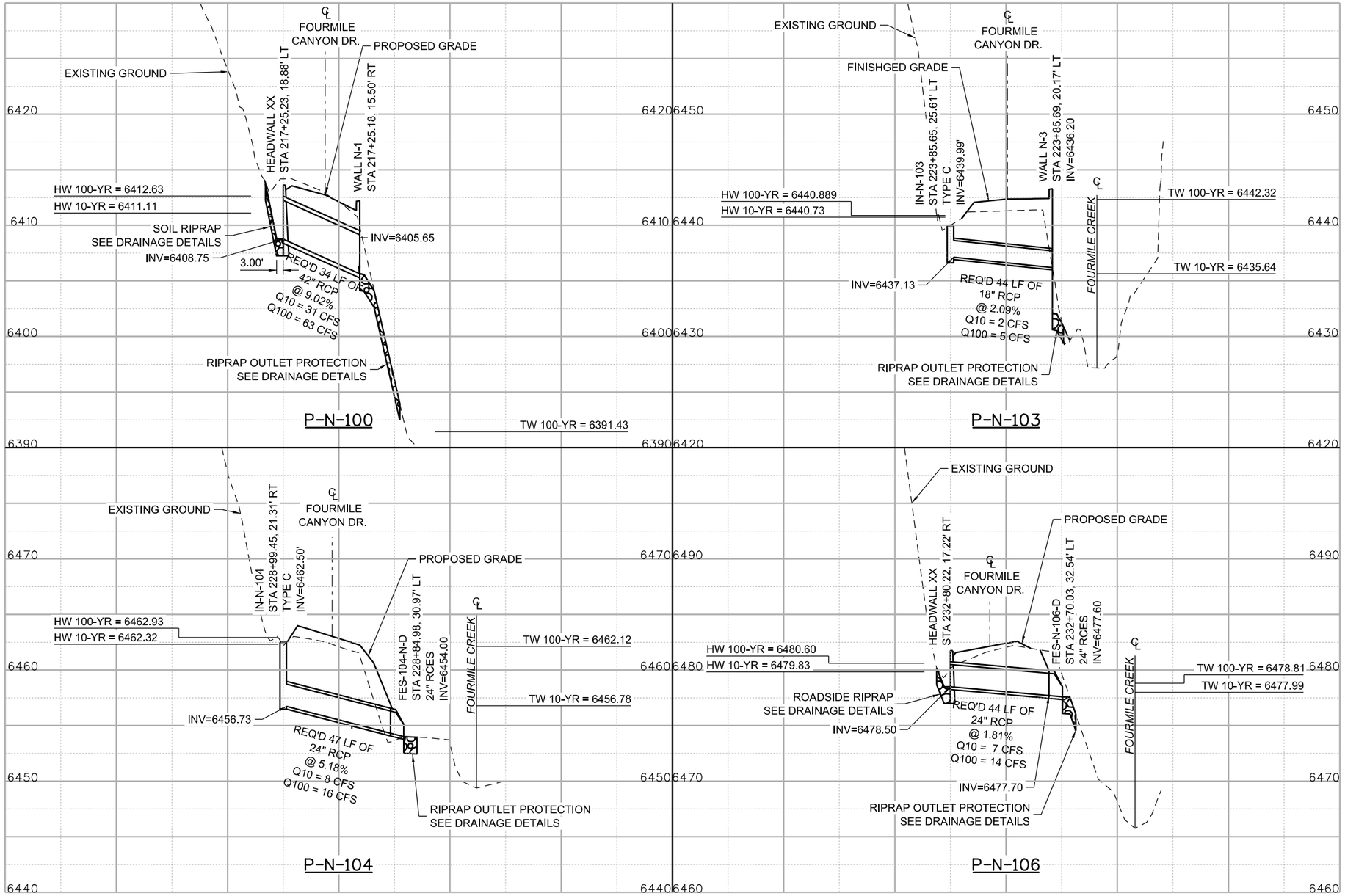

60% SET

CALL UTILITY NOTIFICATION CENTER OF COLORADO
811
CALL 2-BUSINESS DAYS IN ADVANCE BEFORE YOU DIG, GRADE, OR EXCAVATE FOR THE MARKING OF UNDERGROUND MEMBER UTILITIES

REVISIONS:	NO.	DATE	REVISION DESCRIPTION:

Boulder County

BOULDER COUNTY TRANSPORTATION DEPARTMENT
ENGINEERING DIVISION

Michael Baker INTERNATIONAL

DESIGNED:	CAD:	CHECKED:	DATE:
JAM	EMR		05/11/16

FOURMILE CANYON DR(NORTH)
DRAINAGE PROFILES
(1 OF 3)

PROJECT NO: 4043.SEPT12C36 | SHEET NO: 132

edgar.robles 5:58:03 PM 8/30/2016 par:\\DCPW4PP1.bkr.mbakercorp.com:pwprod\Documents\Projects\Lakewood_Office\Boulder_County_Emergency_Transportation\T03\08_Sheet_Files\02_Hydraulics\DGN\North\Fourmile_N_Hydr_Profiles01.dgn

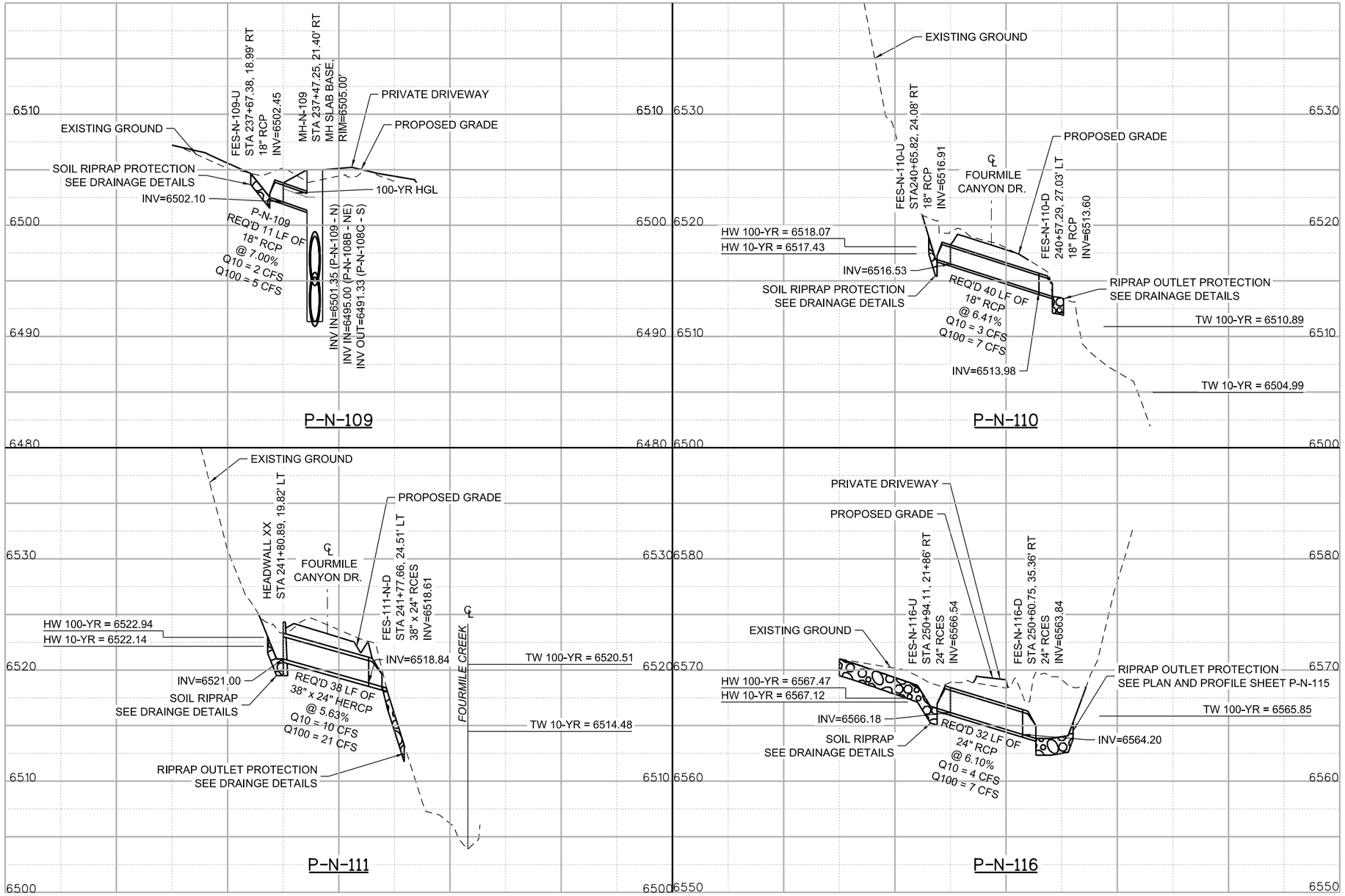

60% SET

CALL UTILITY NOTIFICATION CENTER OF COLORADO
811
CALL 2-BUSINESS DAYS IN ADVANCE BEFORE YOU DIG, GRADE, OR EXCAVATE FOR THE MARKING OF UNDERGROUND MEMBER UTILITIES

REVISIONS:	NO.	DATE	REVISION DESCRIPTION:

Boulder County

BOULDER COUNTY TRANSPORTATION DEPARTMENT
ENGINEERING DIVISION

Michael Baker INTERNATIONAL

DESIGNED:	CAD:	CHECKED:	DATE:
JAM	EMR		05/11/16

FOURMILE CANYON DR(NORTH)
DRAINAGE PROFILES
(2 OF 3)

PROJECT NO: 4043.SEPT12C36 | SHEET NO: 133

edgar.robles 6:53:27 PM 8/30/2016 par:\\DCPWAPP1.bkr.mbakercorp.com:pwprod\Documents\Projects\Lakewood_Office\Boulder_County_Emergency_Transportation\T03\08_Sheet_Files\02_Hydraulics\DGN\North\Fourmile_N_Hydr_Profiles02.dgn

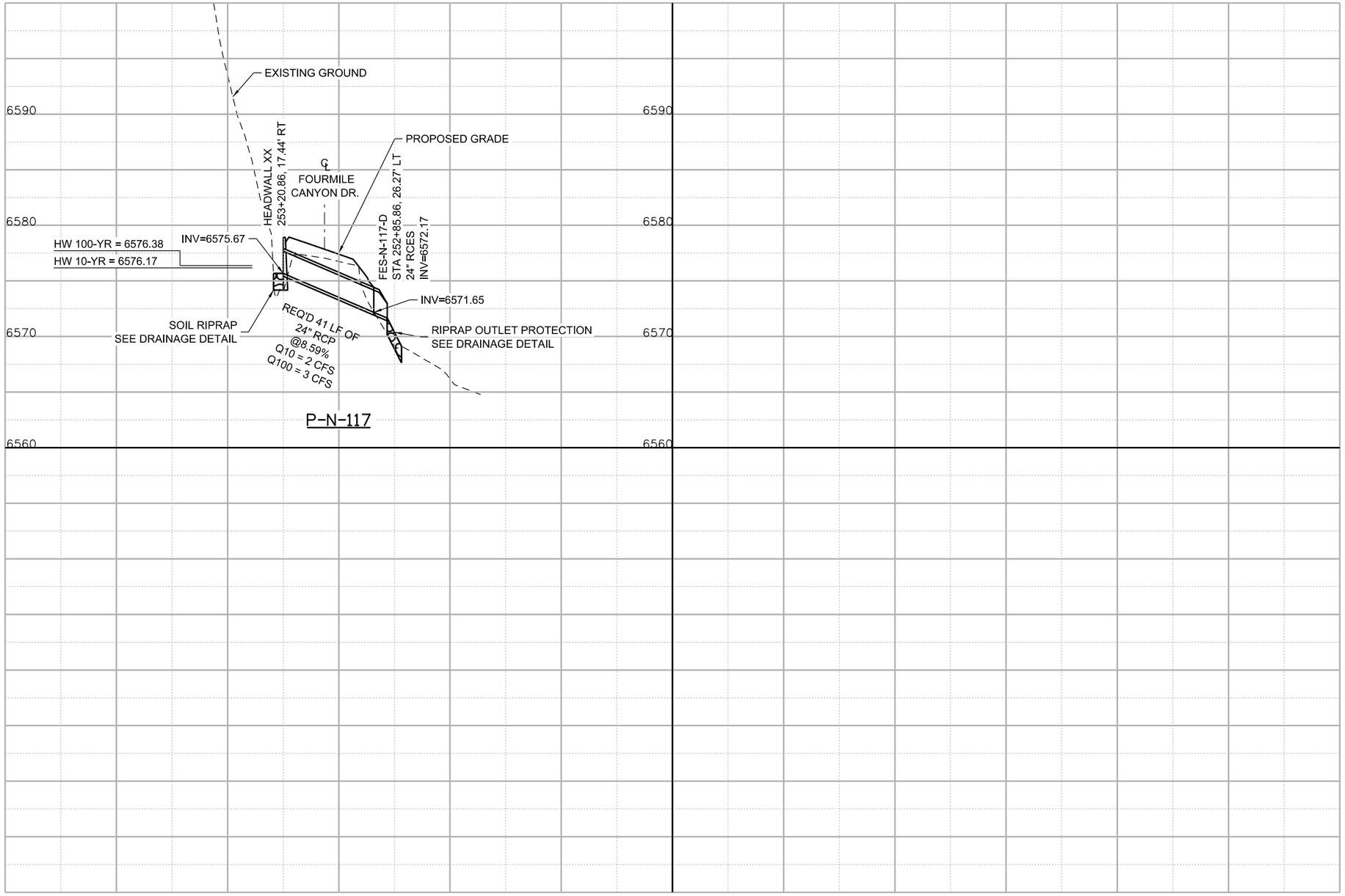

60% SET

CALL UTILITY NOTIFICATION CENTER OF COLORADO
811
CALL 2-BUSINESS DAYS IN ADVANCE BEFORE YOU DIG, GRADE, OR EXCAVATE FOR THE MARKING OF UNDERGROUND MEMBER UTILITIES

REVISIONS:	NO.	DATE	REVISION DESCRIPTION:

Boulder County

BOULDER COUNTY TRANSPORTATION DEPARTMENT
ENGINEERING DIVISION

Michael Baker INTERNATIONAL

DESIGNED:	CAD:	CHECKED:	DATE:
JAM	EMR		05/11/16

FOURMILE CANYON DR(NORTH)
DRAINAGE PROFILES
(3 OF 3)

PROJECT NO: 4043.SEPT12C36 | SHEET NO: 134

edgar.robles 6:41:55 PM 8/30/2016 pw:\\DCPWAPP1.bkr.mbakercorp.com:pwprod\Documents\Projects\Lakewood_Office\Boulder_County_Emergency_Transportation\T03\08_Sheet_Files\02_Hydraulics\DGN\North\Fourmile_N_Hydr_Profiles03.dgn

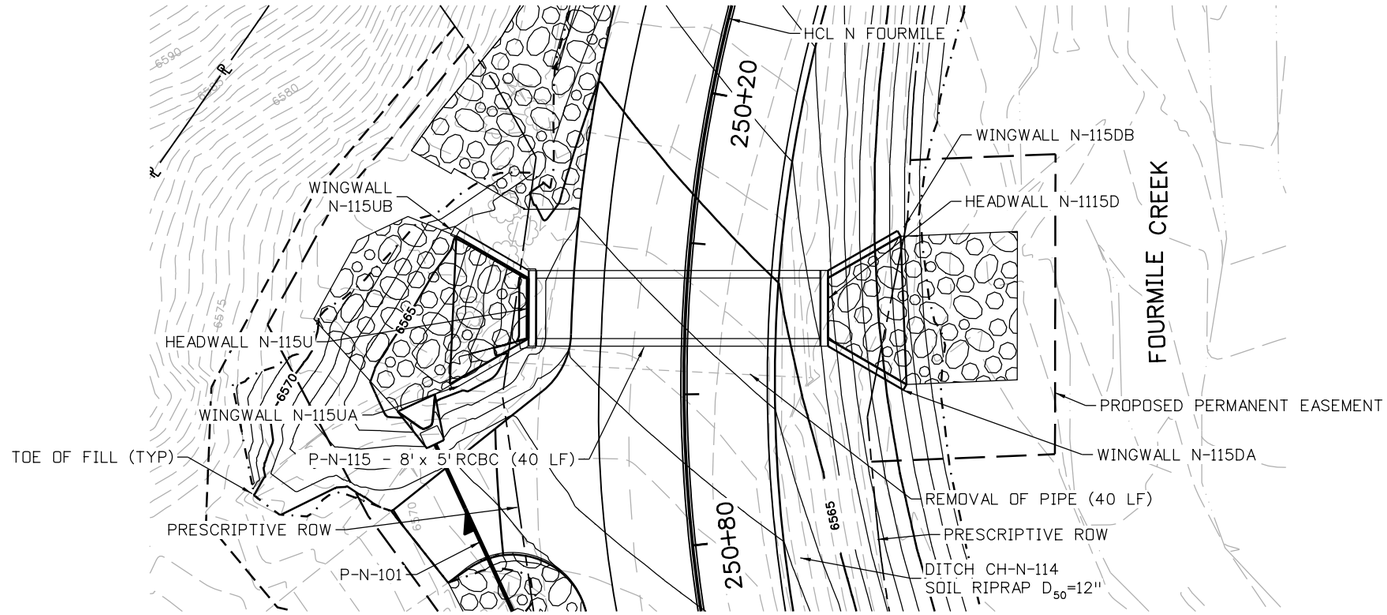

NOTES:

1. SEE DRAINAGE PLANS FOR ADDITIONAL NOTES.

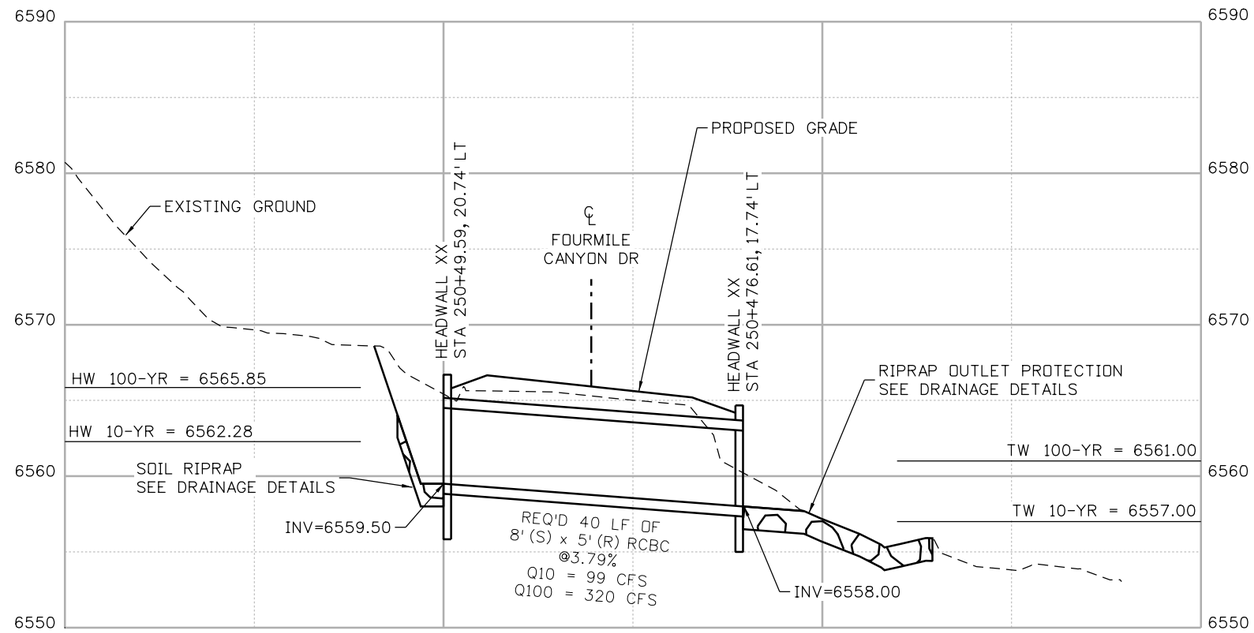

P-N-115

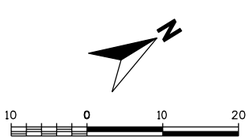

60% SET

CALL UTILITY NOTIFICATION CENTER OF COLORADO
811
CALL 2-BUSINESS DAYS IN ADVANCE BEFORE YOU DIG, GRADE, OR EXCAVATE FOR THE MARKING OF UNDERGROUND MEMBER UTILITIES

REVISIONS:	NO.	DATE	REVISION DESCRIPTION:

Boulder County

Michael Baker INTERNATIONAL

BOULDER COUNTY TRANSPORTATION DEPARTMENT
ENGINEERING DIVISION

DESIGNED:	CAD:	CHECKED:	DATE:
JAM	EAV		05/11/16

FOURMILE CANYON DR(NORTH)
DRAINAGE PLAN AND PROFILE
P-N-115

PROJECT NO: 4043.SEPT12C36 | SHEET NO: 135

edgar.robles 6:20:25 PM 8/30/2016 pw:\\DCPWAPP1.bkr.mbakercorp.com:pwprod\Documents\Projects\Lakewood_Office\Boulder_County_Emergency_Transportation\T03\08_Sheet_Files\02_Hydraulics\DGN\North\Fourmile_N_Hydr_PP05.dgn

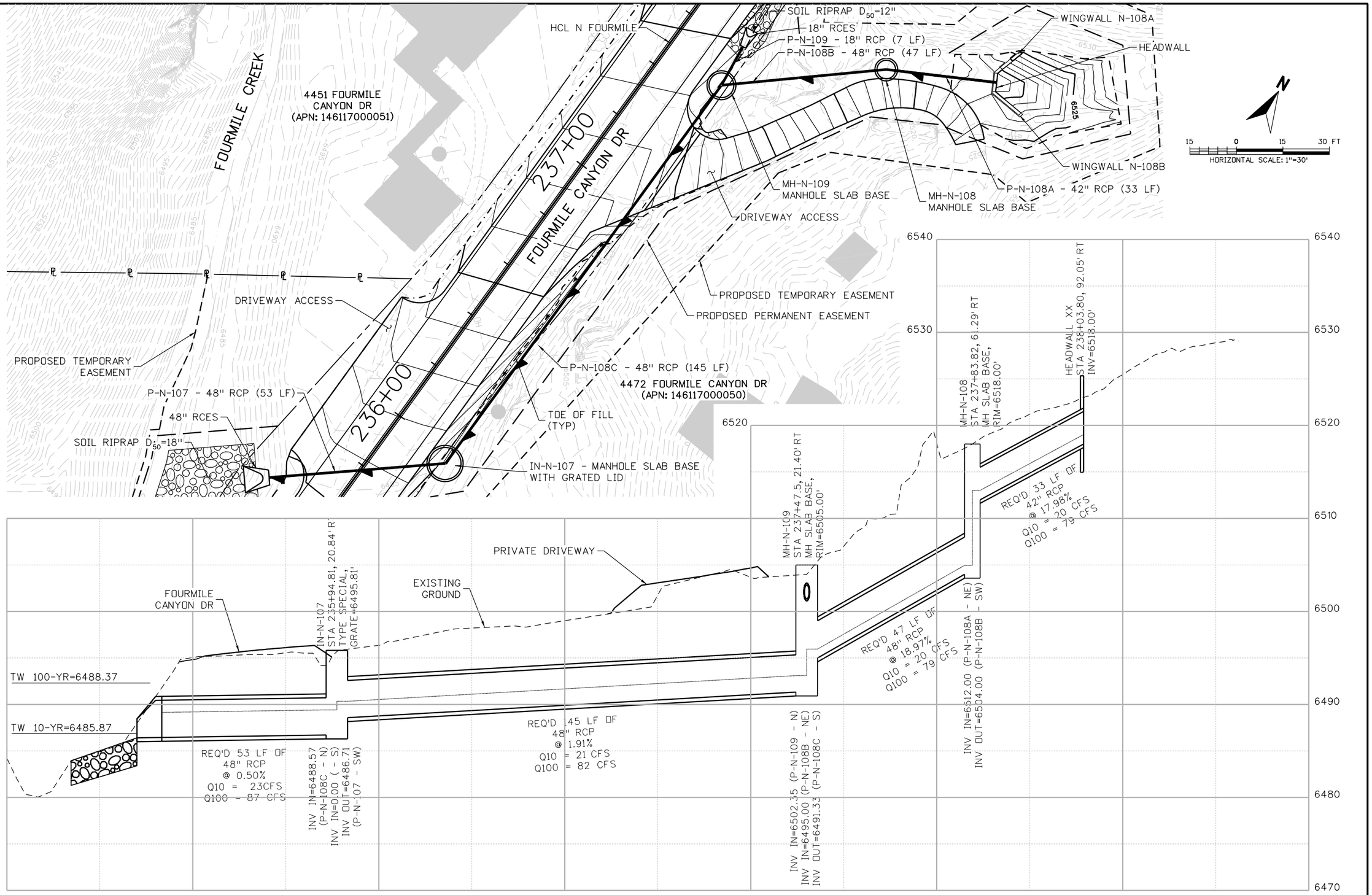

60% SET

CALL UTILITY NOTIFICATION CENTER OF COLORADO
811
CALL 2-BUSINESS DAYS IN ADVANCE BEFORE YOU DIG, GRADE, OR EXCAVATE FOR THE MARKING OF UNDERGROUND MEMBER UTILITIES

REVISIONS:	NO.	DATE	REVISION DESCRIPTION:

Boulder County

Michael Baker INTERNATIONAL

BOULDER COUNTY TRANSPORTATION DEPARTMENT
ENGINEERING DIVISION

DESIGNED:	CAD:	CHECKED:	DATE:
JAM	EAV		05/11/16

FOURMILE CANYON DR(NORTH)
DRAINAGE PLAN AND PROFILE
P-N-107, P-N-108 & P-N-109

PROJECT NO: 4043.SEPT12C36 | SHEET NO: 136

edgar.robles 6:20:43 PM 8/30/2016 pw:\\DCPWAPP1.bkr.mbakercorp.com:pwprod\Documents\Projects\Lakewood_Office\Boulder_County_Emergency_Transportation\T03\08_Sheet_Files\02_Hydraulics\DGN\North\Fourmile_N_Hydr_PP06.dgn

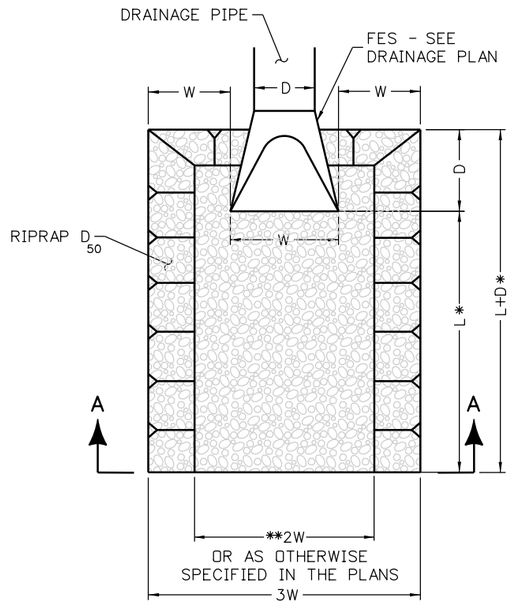

PLAN

* 3D < L < 10D (SEE TABLE)
** EQUALS CHANNEL WIDTH FOR PIPE INLETS

INLET/OUTLET PROTECTION
NOT TO SCALE
FILTER MATERIAL (CLASS A) SHALL BE 6" THICK

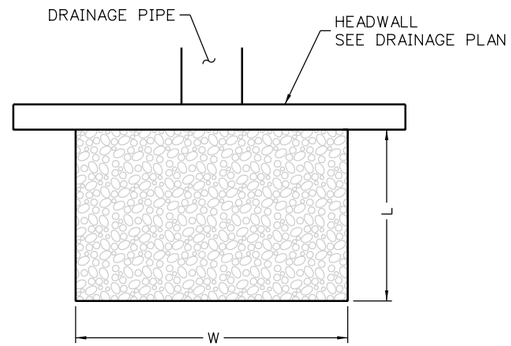

INLET/OUTLET RIPRAP PAD
NOT TO SCALE
FILTER MATERIAL (CLASS A) SHALL BE 6" THICK

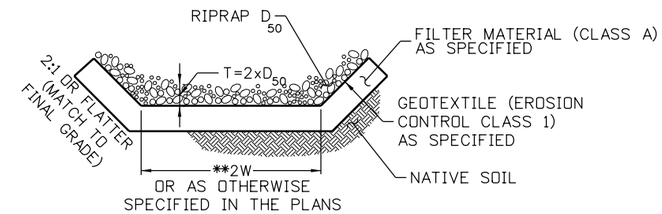

SECTION A-A

NOTES:

1. SOIL RIPRAP AND RIPRAP DETAILS ARE APPLICABLE TO SLOPED AREAS. REFER TO THE DRAINAGE PLANS FOR ACTUAL LOCATIONS AND LIMITS.
2. MIX UNIFORMLY 65% RIPRAP BY VOLUME WITH 35% OF APPROVED SOIL OR GRAVEL BY VOLUME PRIOR TO PLACEMENT.
3. PLACE SOIL RIPRAP OR RIPRAP MIX TO RESULT IN SECURELY INTERLOCKED ROCK AT THE DESIGN THICKNESS AND GRADE. COMPACT AND LEVEL TO ELIMINATE ALL VOIDS AND ROCKS PROJECTING ABOVE DESIGN RIPRAP TOP GRADE.
4. CRIMP OR TACKIFY MULCH ON SOIL RIPRAP OR AS CALLED FOR IN THE PLANS AND SPECIFICATIONS.
5. SEE STORMWATER MANAGEMENT PLAN FOR SEEDING MIXTURE AND DETAILS.
6. BENCH RIPRAP AS NECESSARY TO MATCH EXISTING GRADE AND PLACE STONE-SOIL OR STONE-GRAVEL MIX TO RESULT IN SECURELY INTERLOCKED ROCK AT THE DESIGN THICKNESS AND GRADE. COMPACT AND LEVEL TO ELIMINATE ALL VOIDS AND ROCKS PROJECTING ABOVE FINISHED GRADE.

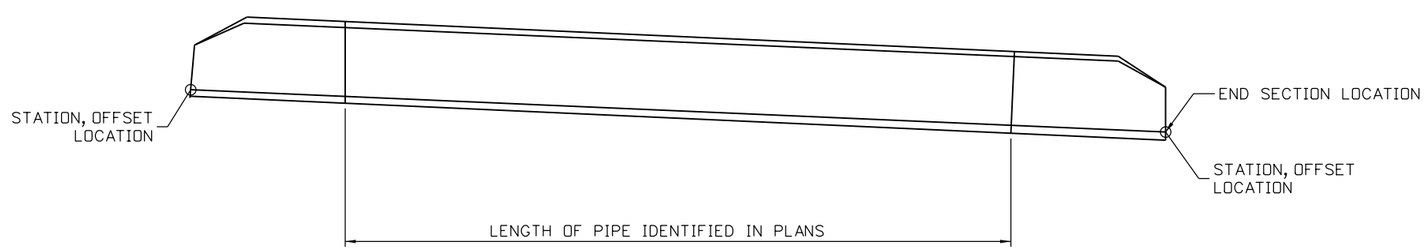

NOTES:

1. FLOW DIRECTION MAY VARY. SEE DRAINAGE PLANS.
2. DIMENSIONS OF DITCH FEATURES ARE LOCATION SPECIFIC. SEE DRAINAGE PLANS AND TABLES.

60% SET

CALL UTILITY NOTIFICATION CENTER OF COLORADO
811
CALL 2-BUSINESS DAYS IN ADVANCE BEFORE YOU DIG, GRADE, OR EXCAVATE FOR THE MARKING OF UNDERGROUND MEMBER UTILITIES

REVISIONS:	NO.	DATE	REVISION DESCRIPTION:

Boulder County
Michael Baker INTERNATIONAL

BOULDER COUNTY TRANSPORTATION DEPARTMENT
ENGINEERING DIVISION

DESIGNED:	CAD:	CHECKED:	DATE:
JAM	EMR	JPZ	

FOURMILE CANYON DRIVE
DRAINAGE DETAILS (SHEET 1 OF 1)

PROJECT NO: 4041.SEPT12C37 | SHEET NO: 137

edgar.robles 5:59:52 PM 8/30/2016 pw:\\DCPWAPP1.bkr.mbakercorp.com:pwprod\Documents\Projects\Lakewood_Office\Boulder_County_Emergency_Transportation\T03\08_Sheet_Files\02_Hydraulics\DGN\DRAINAGE_DETAIL01.dgn

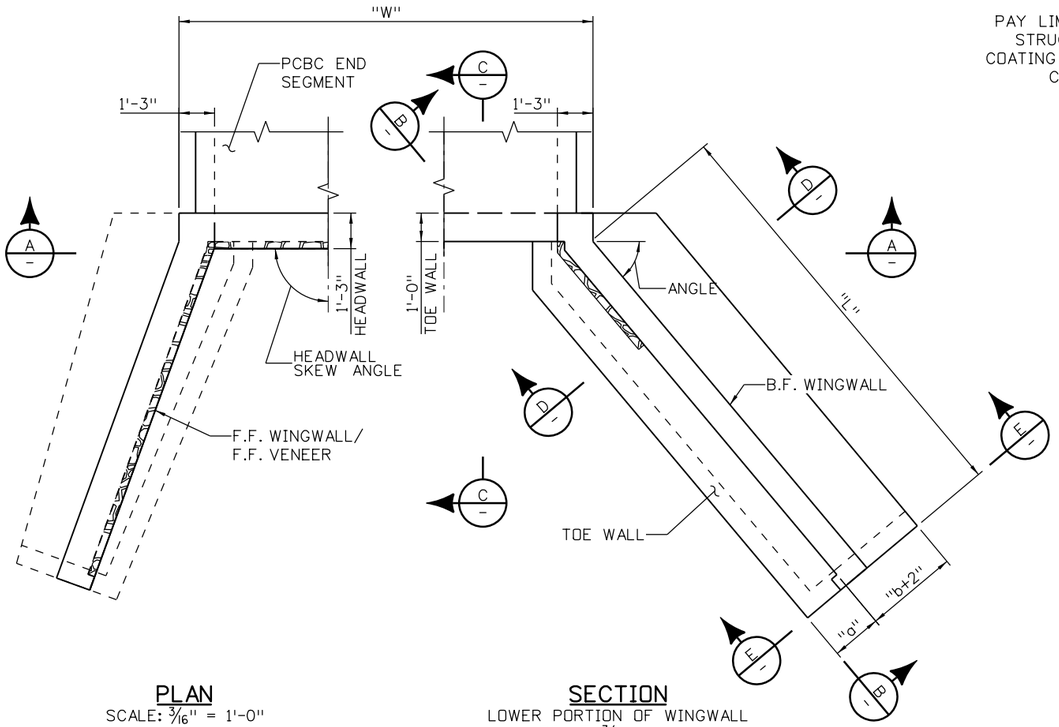

PLAN
SCALE: 3/16" = 1'-0"

SECTION
LOWER PORTION OF WINGWALL
SCALE: 3/16" = 1'-0"

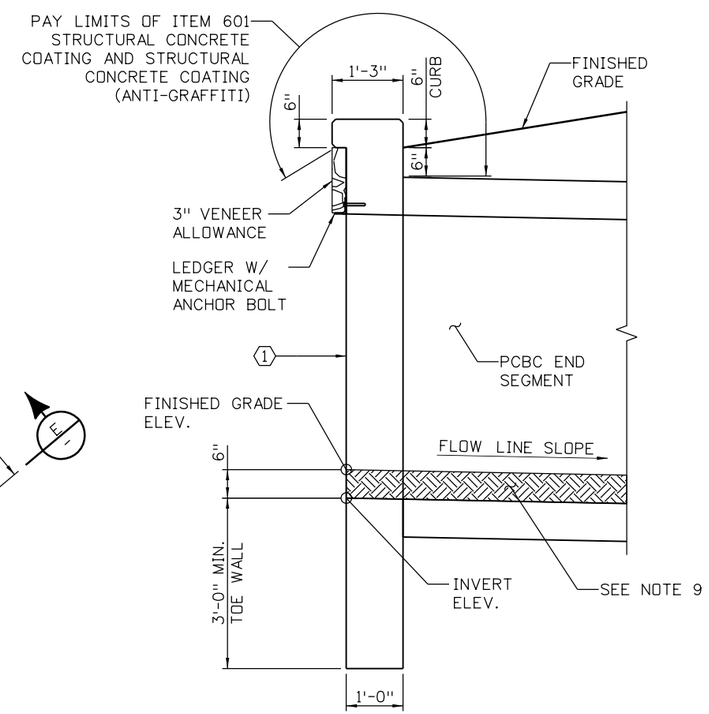

SECTION C
SCALE: 3/8" = 1'-0"

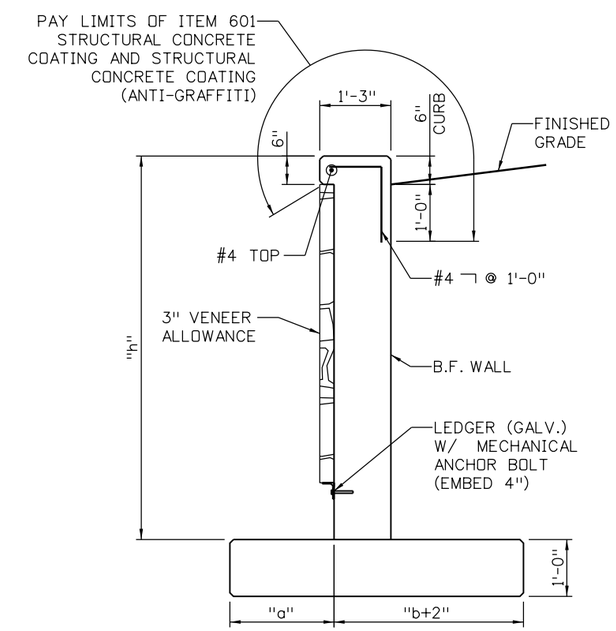

SECTION D
TOE WALL NOT SHOWN
SCALE: 3/8" = 1'-0"

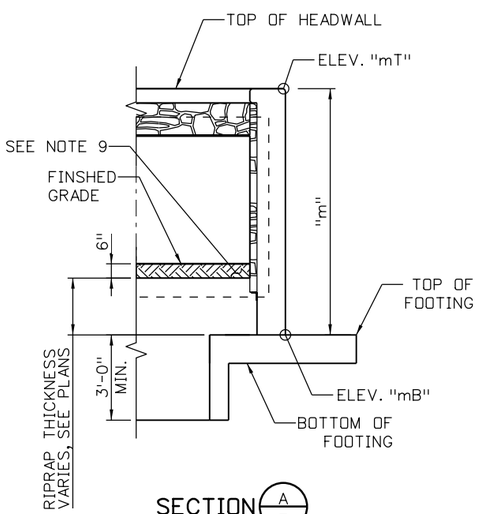

SECTION A
SCALE: 3/16" = 1'-0"

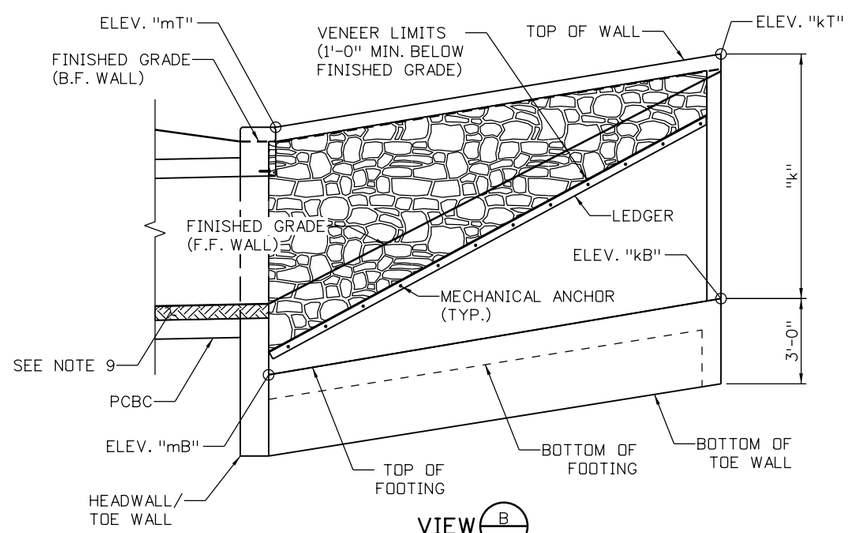

VIEW B
SCALE: 3/16" = 1'-0"

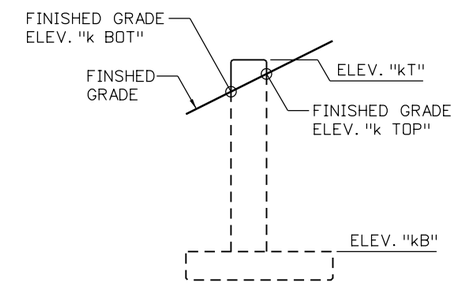

VIEW E
SCALE: 3/16" = 1'-0"

NOTES:

1. FOR REINFORCING AND ADDITIONAL INFORMATION, REFER TO CDOT STANDARD PLAN NO. M-206-1, M-601-1, M-601-20, AND M-603-3.
2. FOR ARCHITECTURAL DETAILS, SEE STRUCTURES PLANS.
3. SEE HEADWALL AND WINGWALL DATA TABLE FOR PARAMETER VALUES.
4. TOE WALL MAY BE OMITTED WHEN FOOTINGS ARE ON BEDROCK AS PERMITTED BY THE ENGINEER.
5. ALL CONCRETE SHALL BE CONCRETE CLASS D.
6. FOR LEDGER AND MECHANICAL ANCHORS, SEE STRUCTURES PLANS.
7. STRUCTURAL CONCRETE COATING SHALL BE DARK BROWN, FEDERAL STANDARD 595C COLOR NO. 30045 OR APPROVED EQUAL.
8. STRUCTURAL CONCRETE COATING LIMITS ALSO APPLY AT END OF HEADWALL/WINGWALL.
9. 6" NATIVE SOIL (IF PRESENT).

KEYNOTES:

1. F.F. HEADWALL IS VERTICAL.

60% SET

CALL UTILITY NOTIFICATION CENTER OF COLORADO
811
CALL 2-BUSINESS DAYS IN ADVANCE BEFORE YOU DIG, GRADE, OR EXCAVATE FOR THE MARKING OF UNDERGROUND MEMBER UTILITIES

REVISIONS:	NO.	DATE	REVISION DESCRIPTION:

BOULDER COUNTY TRANSPORTATION DEPARTMENT
ENGINEERING DIVISION
Boulder County
Michael Baker INTERNATIONAL

DESIGNED:	CAD:	CHECKED:	DATE:
DLT	BMT	SLS	{04/15/16}

FOURMILE CANYON DRIVE
TYPICAL PRECAST BOX CULVERT END DETAILS

PROJECT NO: 4043.SEPT12C38 | SHEET NO: 138

edgar.robles 6:00:17 PM 8/30/2016 pw:\\DCPWAPP1.bkr.mbakercorp.com:pwprod\Documents\Projects\Lakewood_Office\Boulder_County_Emergency_Transportation\T03\08_Sheet_Files\02_Hydraulics\DGN\DRAINAGE_DETAIL02.dgn

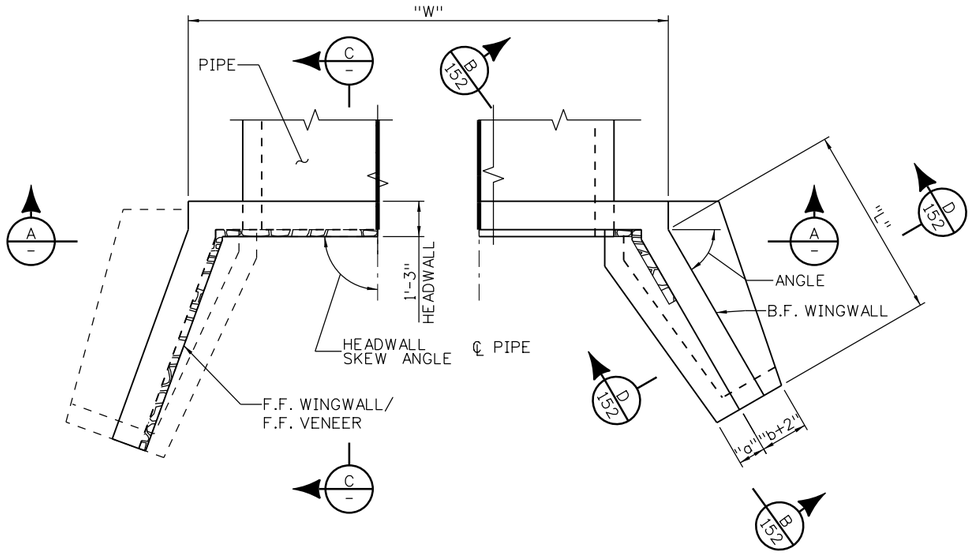

PLAN
SCALE: 3/16" = 1'-0"

SECTION
LOWER PORTION OF WINGWALL
SCALE: 3/16" = 1'-0"

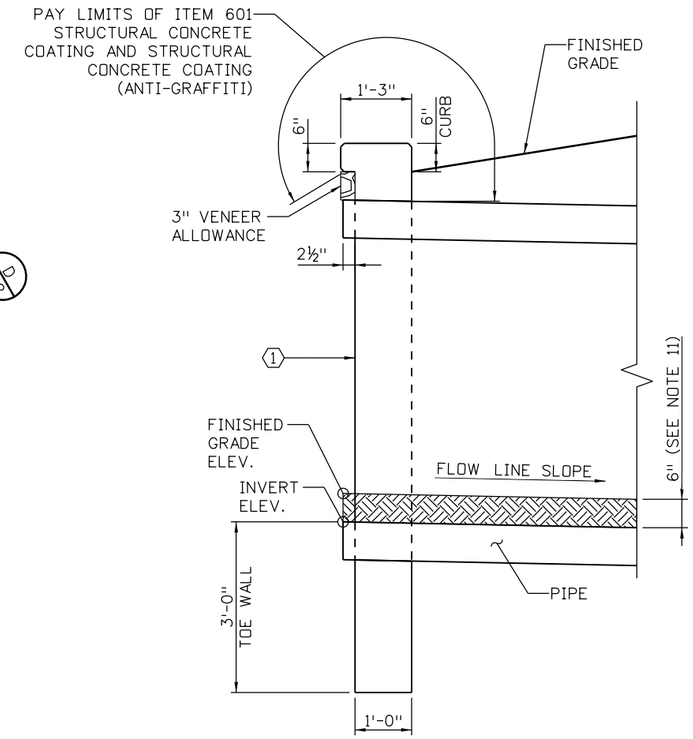

SECTION C
SCALE: 3/8" = 1'-0"

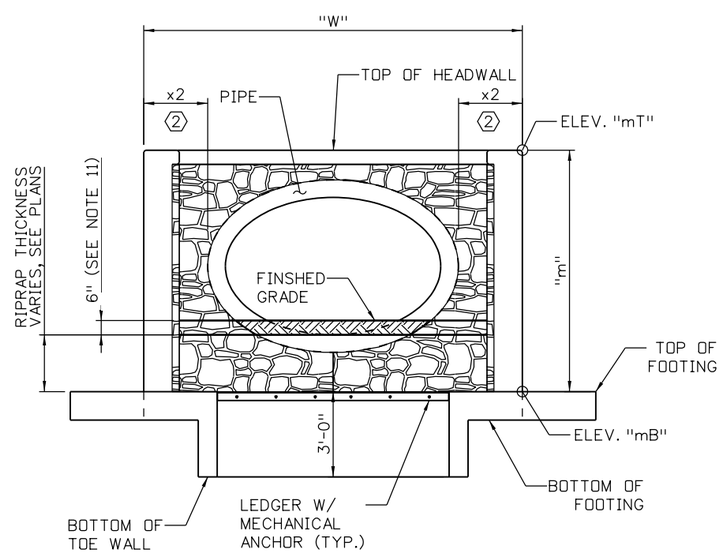

SECTION A
SCALE: 3/16" = 1'-0"

NOTES:

1. NOT ALL REINFORCING AND DETAILS SHOWN. FOR ADDITIONAL INFORMATION, SEE CDOT STANDARD PLAN NO. M-206-1, M-601-10, AND M-601-20.
2. FOR ARCHITECTURAL DETAILS, SEE STRUCTURES PLANS.
3. SEE HEADWALL AND WINGWALL DATA TABLE FOR PARAMETER VALUES.
4. TOE WALL MAY BE OMITTED WHEN FOOTINGS ARE ON BEDROCK AS PERMITTED BY THE ENGINEER.
5. ALL CONCRETE SHALL BE CONCRETE CLASS D.
6. x2 DIMENSION AS SHOWN ON CDOT STANDARD PLAN NO. M-601-10 SHALL BE FOR THE WIDTH OF THE PIPE.
7. FOR LEDGER DETAILS, SEE TYPICAL PRECAST BOX CULVERT END DETAILS SHEET.
8. FOR LEDGER AND MECHANICAL ANCHORS, SEE STRUCTURAL PLANS.
9. STRUCTURAL CONCRETE COATING SHALL BE DARK BROWN, FEDERAL STANDARD 595C COLOR NO. 30045 OR APPROVED EQUAL.
10. STRUCTURAL CONCRETE COATING LIMITS ALSO APPLY AT END OF HEADWALL/WINGWALL AND EXPOSED END OF PIPE.
11. NATIVE SOIL (IF PRESENT). NOT ALL CULVERTS HAVE 6" OF NATIVE SOIL FILL. SEE HEADWALL AND WINGWALL DATA TABLE FOR INVERT AND FINISHED GRADE ELEVATIONS.

KEYNOTES:

1. F.F. HEADWALL IS VERTICAL.
2. PROVIDE x2 DIMENSION FOR BOTH FRONT AND BACK FACE OF HEADWALL AT LIMITS OF PIPE.

60% SET

CALL UTILITY NOTIFICATION CENTER OF COLORADO
811
CALL 2-BUSINESS DAYS IN ADVANCE BEFORE YOU DIG, GRADE, OR EXCAVATE FOR THE MARKING OF UNDERGROUND MEMBER UTILITIES

REVISIONS:	NO.	DATE	REVISION DESCRIPTION:

BOULDER COUNTY TRANSPORTATION DEPARTMENT
ENGINEERING DIVISION
Boulder County
Michael Baker INTERNATIONAL

DESIGNED:	CAD:	CHECKED:	DATE:
DLT	BMT		04/15/16

FOURMILE CANYON DRIVE
TYPICAL ELLIPTICAL CULVERT END DETAILS

PROJECT NO: 4043.SEPT12C38 | SHEET NO: 139

edgar.robles 6:00:38 PM 8/30/2016 pw:\\DCPWAPP1.bkr.mbakercorp.com:pwprod\Documents\Projects\Lakewood_Office\Boulder_County_Emergency_Transportation\T03\08_Sheet_Files\02_Hydraulics\DGN\DRAINAGE_DETAIL03.dgn

HEADWALL AND WINGWALL DATA TABLE

HEADWALL	CL NORTHING	CL EASTING	INVERT ELEV	FILL DEPTH (IN CULVERT)	FINISHED GRADE ELEV.	SKEW ANGLE (D M S)	W (FEET)	WINGWALL	ANGLE (D M S)	L (FEET)	ELEV. mT	ELEV. mB	m (FEET)	FINISHED GRADE ELEV. m TOP	FINISHED GRADE ELEV. m BOT	ELEV. kT	ELEV. kB	k (FEET)	FINISHED GRADE ELEV. k TOP	FINISHED GRADE ELEV. k BOT

TO BE POPULATED

edgar.robles 6:01:01 PM 8/30/2016 pw:\\DCPWAPP1.bkr.mbakercorp.com:pwprod\Documents\Projects\Lakewood_Office\Boulder_County_Emergency_Transportation\TO3\08_Sheet_Files\02_Hydraulics\DGN\DRAINAGE_DETAIL04.dgn

60% SET

CALL UTILITY NOTIFICATION CENTER OF COLORADO
811
CALL 2-BUSINESS DAYS IN ADVANCE BEFORE YOU DIG, GRADE, OR EXCAVATE FOR THE MARKING OF UNDERGROUND MEMBER UTILITIES

REVISIONS:	NO.	DATE	REVISION DESCRIPTION:

Boulder County

BOULDER COUNTY TRANSPORTATION DEPARTMENT
ENGINEERING DIVISION

Michael Baker INTERNATIONAL

DESIGNED:	CAD:	CHECKED:	DATE:
JAM	EMR	JPZ	

FOURMILE CANYON DRIVE
HEADWALL DESIGN CONTROL SHEET

PROJECT NO: 4041.SEPT12C37

SHEET NO: 140

PIPE CULVERT HEADWALL DATA TABLE															
HEADWALL	CULVERT CL NORTHING	CULVERT CL EASTING	SKEW ANGLE (D M S)	H (FEET)	T (FEET)	W1 (FEET)	W2 (FEET)	L1 (FEET)	L2 (FEET)	ELEV. mT	INVERT ELEV	ELEV A	ELEV B	ELEV C	ELEV D

TO BE POPULATED

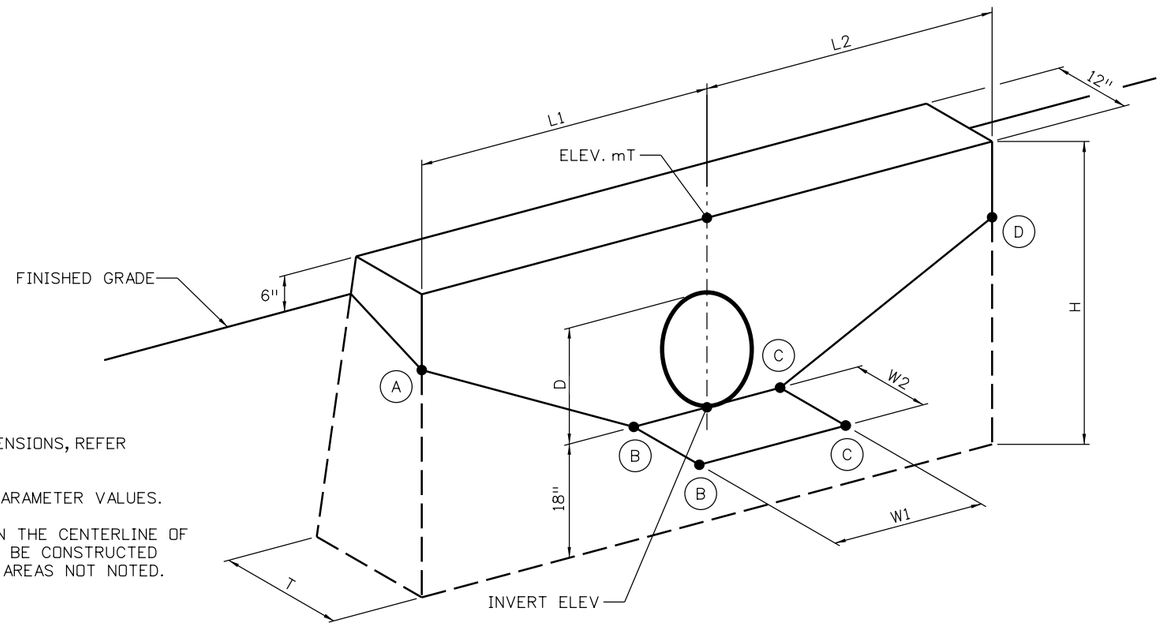

PERSPECTIVE

TYPICAL PIPE CULVERT HEADWALL

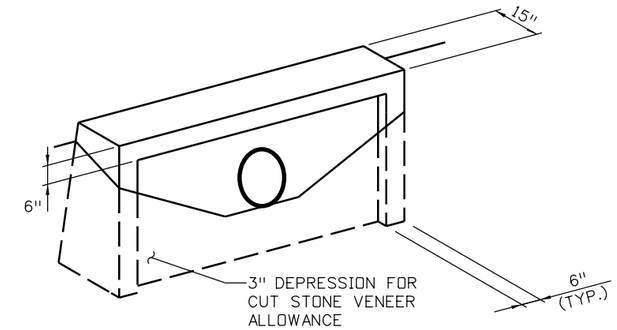

PERSPECTIVE

PIPE CULVERT HEADWALL WITH CUT STONE VENEER
SAME AS TYPICAL TYPICAL PIPE CULVERT HEADWALL EXCEPT AS SHOWN
CUT STONE VENEER NOT SHOWN

NOTES:

1. FOR ADDITIONAL INFORMATION, MATERIAL AND DIMENSIONS, REFER TO CDOT STANDARD PLAN NO. M-206-12.
2. SEE PIPE CULVERT HEADWALL DATA TABLE FOR PARAMETER VALUES.
3. ELEV. mT IS TAKEN AT THE TOP OF HEADWALL ON THE CENTERLINE OF THE PIPE CULVERT. THE TOP OF HEADWALL SHALL BE CONSTRUCTED 6" +/- ABOVE EDGE OF PAVEMENT IN ALL OTHER AREAS NOT NOTED.
4. ALL CONCRETE SHALL BE CLASS B.
5. GENERIC DETAILS FOR PIPE CULVERT HEADWALL WITH CUT STONE VENEER SHOWN. FOR ADDITIONAL AESTHETIC DETAILS INCLUDING STRUCTURAL CONCRETE COATINGS, SEE TYPICAL ELLIPTICAL CULVERT END DETAILS SHEET.

60% SET

CALL UTILITY NOTIFICATION CENTER OF COLORADO
811
CALL 2-BUSINESS DAYS IN ADVANCE BEFORE YOU DIG, GRADE, OR EXCAVATE FOR THE MARKING OF UNDERGROUND MEMBER UTILITIES

REVISIONS:	NO.	DATE	REVISION DESCRIPTION:

Boulder County

BOULDER COUNTY TRANSPORTATION DEPARTMENT
ENGINEERING DIVISION

Michael Baker INTERNATIONAL

DESIGNED:	CAD:	CHECKED:	DATE:
JAM	BMM	JPZ	

FOURMILE CANYON DRIVE
CULVERT HEADWALL DETAILS

PROJECT NO: 4041.SEPT12C37 | SHEET NO: 141

edgar.robles 6:01:21 PM 8/30/2016 pw:\\DCPWAPP1.bkr.mbakercorp.com:pwprod\Documents\Projects\Lakewood_Office\Boulder_County_Emergency_Transportation\TO3\08_Sheet_Files\02_Hydraulics\DGN\DRAINAGE_DETAIL05.dgn

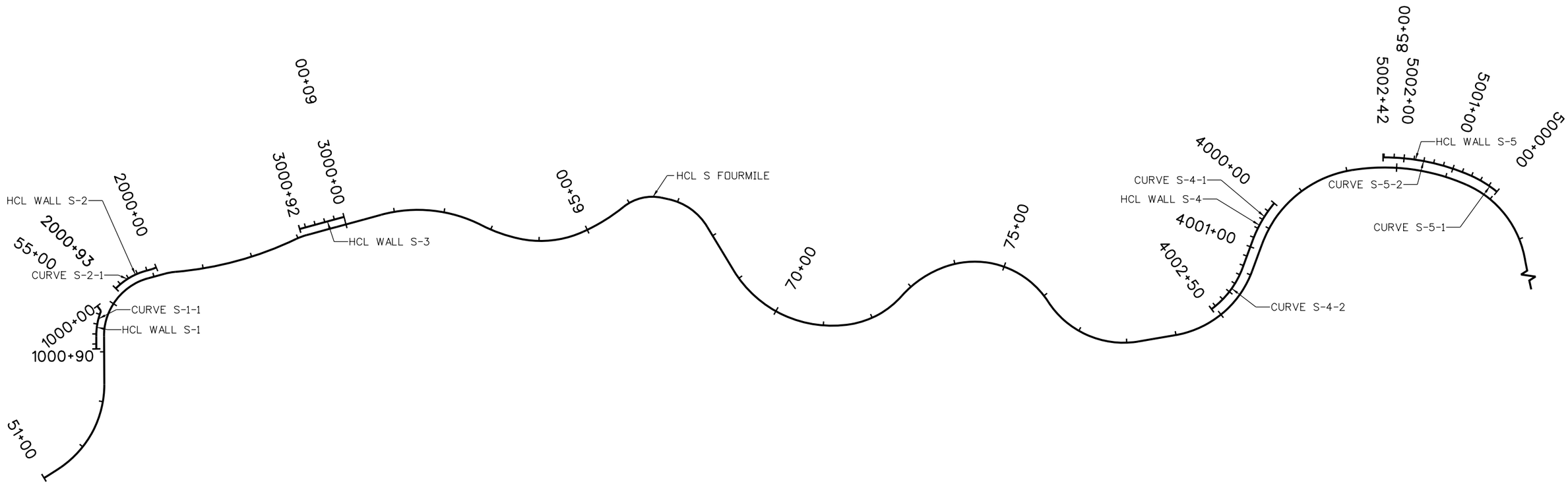

NOTES:

1. SEE GEOMETRIC LAYOUT (2 OF 2) FOR ALIGNMENT DATA.
2. FOR ROADWAY ALIGNMENT AND INFORMATION, REFER TO ROADWAY PLANS.

100 0 100 200 FT
SCALE: 1"=200'

60% SET

CALL UTILITY NOTIFICATION CENTER OF COLORADO
811
CALL 2-BUSINESS DAYS IN ADVANCE BEFORE YOU DIG, GRADE, OR EXCAVATE FOR THE MARKING OF UNDERGROUND MEMBER UTILITIES

REVISIONS:	NO.	DATE	REVISION DESCRIPTION:

Boulder County

BOULDER COUNTY TRANSPORTATION DEPARTMENT
ENGINEERING DIVISION

Michael Baker INTERNATIONAL

DESIGNED:	CAD:	CHECKED:	DATE:
DLT	BMT		8/30/2016

FOURMILE CANYON DR (SOUTH)
GEOMETRIC LAYOUT
(1 OF 2)

PROJECT NO: 4043.SEPT12C36 | SHEET NO: 142

brett.terrell 4:54:59 PM 8/30/2016 pw:\\DCPWAPP1.bkr.mbakercorp.com:pwprod\Documents\Projects\Lakewood_Office\Boulder_County_Emergency_Transportation\T03\08_Sheet_Files\06_Structures\DGN\138067_Wall_010.dgn

WALL S-1 HORIZONTAL ALIGNMENT DATA TABLE

CURVE NUMBER	POINT TYPE	STATION	NORTHING	EASTING	BEARING	DISTANCE	RADIUS	LENGTH	DELTA
	POB	1000+00.00	252409.94	47177.86					
					N 12° 01'43" E	12.79'			
	PC	1000+12.79	252422.45	47180.52					
S-1-1	PI	1000+39.16	252431.08	47205.43			135.50'	52.08'	22° 01'16" LT.
	PT	1000+64.87	252448.43	47225.29					
					N 48° 51'24" E	24.92'			
	POE	1000+89.79	252464.83	47244.05					

WALL S-2 HORIZONTAL ALIGNMENT DATA TABLE

CURVE NUMBER	POINT TYPE	STATION	NORTHING	EASTING	BEARING	DISTANCE	RADIUS	LENGTH	DELTA
	POB	2000+00.00	252449.1	47042.32					
					S 62° 36'46" E	8.58'			
	PI	2000+08.58	252445.16	47049.94					
					S 56° 03'30" E	12.71'			
	PC	2000+21.29	252438.06	47060.48					
S-2-1	PI	2000+57.78	252417.68	47090.75			135.50'	71.29'	30° 08'44" LT.
	POE	2000+92.58	252415.27	47127.16					

WALL S-3 HORIZONTAL ALIGNMENT DATA TABLE

CURVE NUMBER	POINT TYPE	STATION	NORTHING	EASTING	BEARING	DISTANCE	RADIUS	LENGTH	DELTA
	POB	3000+00.00	252667.21	46720					
					S 56° 03'30" E	92.00'			
	POE	3000+92.00	252615.84	46796.33					

WALL S-4 HORIZONTAL ALIGNMENT DATA TABLE

CURVE NUMBER	POINT TYPE	STATION	NORTHING	EASTING	BEARING	DISTANCE	RADIUS	LENGTH	DELTA
	POB	4000+00.00	254058.26	45482.11					
S-4-1	PI	4000+43.58	254058.88	45525.69			250.17'	86.29'	19° 45'47" LT.
	PT	4000+86.29	254074.19	45566.49					
					N 69° 25'25" E	58.72'			
	PC	4001+45.01	254094.83	45621.46					
S-4-2	PI	4001+99.05	254113.82	45672.05			179.83'	104.99'	33° 27'04" RT.
	POE	4002+50.00	254101.78	45724.73					

WALL S-5 HORIZONTAL ALIGNMENT DATA TABLE

CURVE NUMBER	POINT TYPE	STATION	NORTHING	EASTING	BEARING	DISTANCE	RADIUS	LENGTH	DELTA
	POB	5000+00.00	254380.3	45173.53					
S-5-1	PI	5000+31.04	254349.27	45174.11			220.17'	61.66'	16° 02'51" LT.
	PCC	5000+61.66	254319.61	45183.24					
S-5-2	PI	5001+53.18	254232.15	45210.18			430.17'	180.34'	24° 01'11" LT.
	POE	5002+42.00	254163.23	45270.38					

60% SET

CALL UTILITY NOTIFICATION CENTER OF COLORADO
811
CALL 2-BUSINESS DAYS IN ADVANCE BEFORE YOU DIG, GRADE, OR EXCAVATE FOR THE MARKING OF UNDERGROUND MEMBER UTILITIES

REVISIONS: NO.	DATE	REVISION DESCRIPTION:

Boulder County

Michael Baker INTERNATIONAL

BOULDER COUNTY TRANSPORTATION DEPARTMENT
ENGINEERING DIVISION

DESIGNED:	CAD:	CHECKED:	DATE:
DLT	BMT		8/30/2016

FOURMILE CANYON DR (SOUTH)
GEOMETRIC LAYOUT
(2 OF 2)

PROJECT NO: 4043.SEPT12C36 | SHEET NO: 143

brett.terrell 5:11:54 PM 8/30/2016 pw:\\DCPWAPP1.bkr.mbakercorp.com:pwprod\Documents\Projects\Lakewood_Office\Boulder_County_Emergency_Transportation\TO3\08_Sheet_Files\06_Structures\DGN\138067_Wall_011.dgn

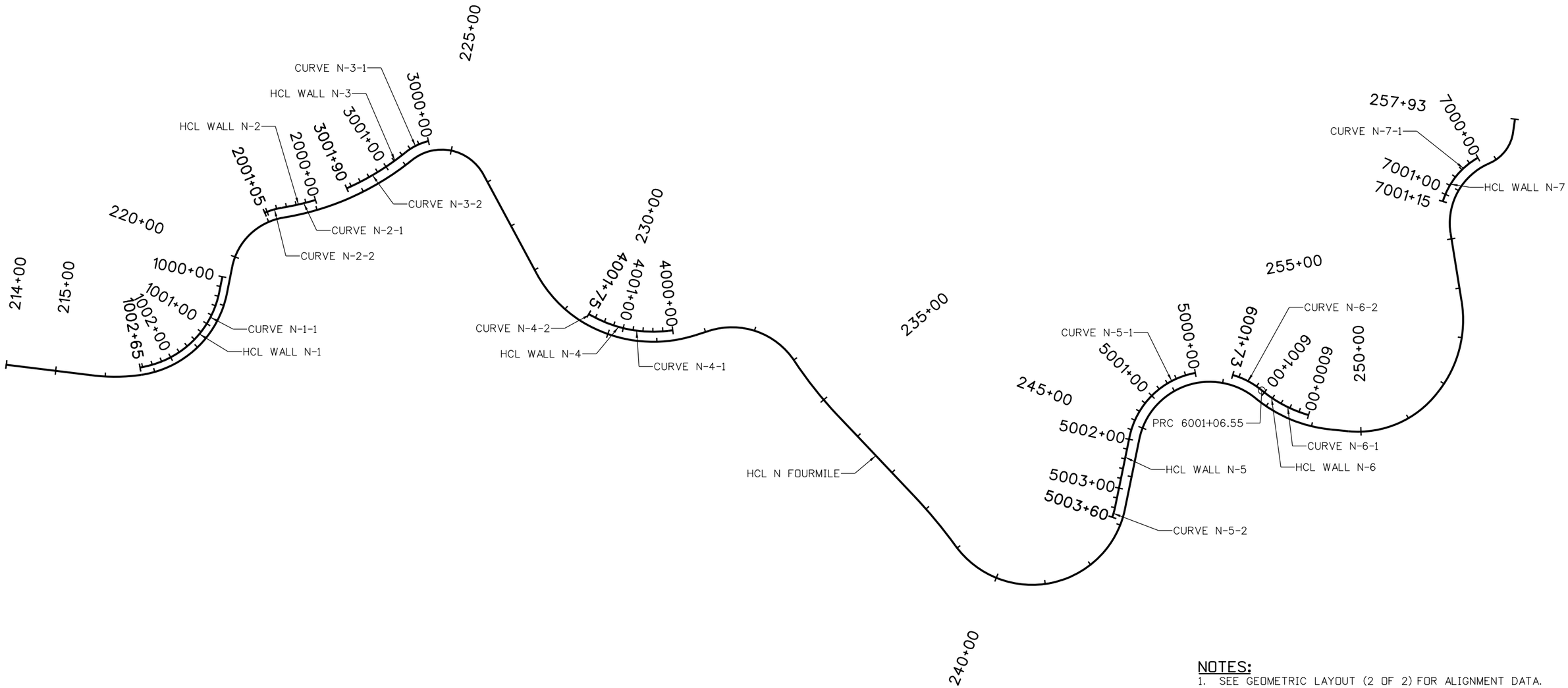

NOTES:

1. SEE GEOMETRIC LAYOUT (2 OF 2) FOR ALIGNMENT DATA.
2. FOR ROADWAY ALIGNMENT AND INFORMATION, REFER TO ROADWAY PLANS.

N

100 0 100 200 FT
SCALE: 1"=200'

brett.terrell 5:12:11 PM 8/30/2016 pw:\\DCPWAPP1.bkr.mbakercorp.com:pwprod\Documents\Projects\Lakewood_Office\Boulder_County_Emergency_Transportation\T03\08_Sheet_Files\06_Structures\DGN\138067_Well_02.0.dgn

60% SET

CALL UTILITY NOTIFICATION CENTER OF COLORADO
811
CALL 2-BUSINESS DAYS IN ADVANCE BEFORE YOU DIG, GRADE, OR EXCAVATE FOR THE MARKING OF UNDERGROUND MEMBER UTILITIES

REVISIONS:	NO.	DATE	REVISION DESCRIPTION:

Boulder County

BOULDER COUNTY TRANSPORTATION DEPARTMENT
ENGINEERING DIVISION

Michael Baker INTERNATIONAL

DESIGNED:	CAD:	CHECKED:	DATE:
DLT	BMT		8/30/2016

FOURMILE CANYON DR (NORTH)
GEOMETRIC LAYOUT
(1 OF 2)

PROJECT NO: 4043.SEPT12C36 | SHEET NO: 144

WALL N-1 HORIZONTAL ALIGNMENT DATA TABLE

CURVE NUMBER	POINT TYPE	STATION	NORTHING	EASTING	BEARING	DISTANCE	RADIUS	LENGTH	DELTA
	POB	1000+00.00	259855.23	38556.84					
					N 61° 10'17" E	32.26'			
	PC	1000+32.26	259870.79	38585.1					
N-1-1	PI	1001+32.12	259918.94	38672.58			189.50'	183.80'	55° 34'21" RT.
	PCC	1002+16.06	259874	38761.75					
N-1-2	PI	1002+40.64	259862.94	38783.7			213.27'	48.94'	13° 08'48" RT.
	POE	1002+65.00	259847.18	38802.56					

WALL N-2 HORIZONTAL ALIGNMENT DATA TABLE

CURVE NUMBER	POINT TYPE	STATION	NORTHING	EASTING	BEARING	DISTANCE	RADIUS	LENGTH	DELTA
	POB	2000+00.00	259898.08	38318.82					
N-2-1	PI	2000+34.72	259879.18	38347.94			529.83'	69.33'	7° 29'52" RT.
	PRC	2000+69.33	259856.63	38374.35					
N-2-2	PI	2000+87.26	259845	38387.98			145.17'	35.67'	14° 04'37" LT.
	POE	2001+05.00	259837.02	38404.03					

WALL N-3 HORIZONTAL ALIGNMENT DATA TABLE

CURVE NUMBER	POINT TYPE	STATION	NORTHING	EASTING	BEARING	DISTANCE	RADIUS	LENGTH	DELTA
	POB	3000+00.00	259994.53	38082.48					
N-3-1	PI	3000+26.11	259979.08	38103.52			115.17'	51.35'	25° 32'46"
	PRC	3000+51.35	259974.21	38129.17					
N-3-2	PI	3001+21.07	259961.2	38197.67			529.83'	138.65'	14° 59'37" RT.
	POE	3001+90.00	259930.91	38260.47					

WALL N-4 HORIZONTAL ALIGNMENT DATA TABLE

CURVE NUMBER	POINT TYPE	STATION	NORTHING	EASTING	BEARING	DISTANCE	RADIUS	LENGTH	DELTA
	POB	4000+00.00	260613.6	38054.94					
					S 46° 58'00" E	9.22'			
	PC	4000+09.22	260607.31	38061.68					
N-4-1	PI	4000+88.81	260553	38119.86			254.83'	154.29'	34° 41'23" RT.
	PCC	4001+63.51	260475.23	38136.78					
N-4-2	PI	4001+69.25	260469.61	38138.01			234.83'	11.49'	2° 48'15" RT.
	POE	4001+75.00	260463.94	38138.95					

WALL N-5 HORIZONTAL ALIGNMENT DATA TABLE

CURVE NUMBER	POINT TYPE	STATION	NORTHING	EASTING	BEARING	DISTANCE	RADIUS	LENGTH	DELTA
	POB	5000+00.00	261467.95	37442.78					
N-5-1	PI	5001+11.28	261397.04	37528.53			164.17'	195.58'	68° 15'38" LT.
	PT	5001+95.58	261450.43	37626.17					
					N 61° 19'41" E	143.42'			
	PC	5003+39.00	261519.24	37752					
N-5-2	PI	5003+49.52	261524.28	37761.22			169.83'	21.00'	7° 04'59" RT.
	POE	5003+60.00	261528.15	37771					

WALL N-6 HORIZONTAL ALIGNMENT DATA TABLE

CURVE NUMBER	POINT TYPE	STATION	NORTHING	EASTING	BEARING	DISTANCE	RADIUS	LENGTH	DELTA
	POB	6000+00.00	261695.62	37360.36					
N-6-1	PI	6000+54.03	261646.35	37382.54			259.83'	106.55'	23° 29'40"
	PRC	6001+06.55	261592.33	37383.25					
N-6-2	PI	6001+40.23	261558.64	37383.68			164.17'	66.45'	23° 11'36" LT.
	POE	6001+73.00	261527.85	37397.35					

WALL N-7 HORIZONTAL ALIGNMENT DATA TABLE

CURVE NUMBER	POINT TYPE	STATION	NORTHING	EASTING	BEARING	DISTANCE	RADIUS	LENGTH	DELTA
	POB	7000+00.00	261621.19	36747.25					
N-7-1	PI	7000+60.49	261600.09	36803.94			150.17'	115.00'	43° 52'41" LT.
	POE	7001+15.00	261624.17	36859.42					

60% SET

CALL UTILITY NOTIFICATION CENTER OF COLORADO
811
CALL 2-BUSINESS DAYS IN ADVANCE BEFORE YOU DIG, GRADE, OR EXCAVATE FOR THE MARKING OF UNDERGROUND MEMBER UTILITIES

REVISIONS: NO.	DATE	REVISION DESCRIPTION:

Boulder County

Michael Baker INTERNATIONAL

BOULDER COUNTY TRANSPORTATION DEPARTMENT
ENGINEERING DIVISION

DESIGNED:	CAD:	CHECKED:	DATE:
DLT	BMT		8/30/2016

FOURMILE CANYON DR (NORTH)
GEOMETRIC LAYOUT
(2 OF 2)

PROJECT NO: 4043.SEPT12C36 | SHEET NO: 145

brett.terrell 5:12:27 PM 8/30/2016 pw:\\DCPWAPP1.bkr.mbakercorp.com:pwprod\Documents\Projects\Lakewood_Office\Boulder_County_Emergency_Transportation\T03\08_Sheet_Files\06_Structures\DGN\138067_Wall_02.1dgn

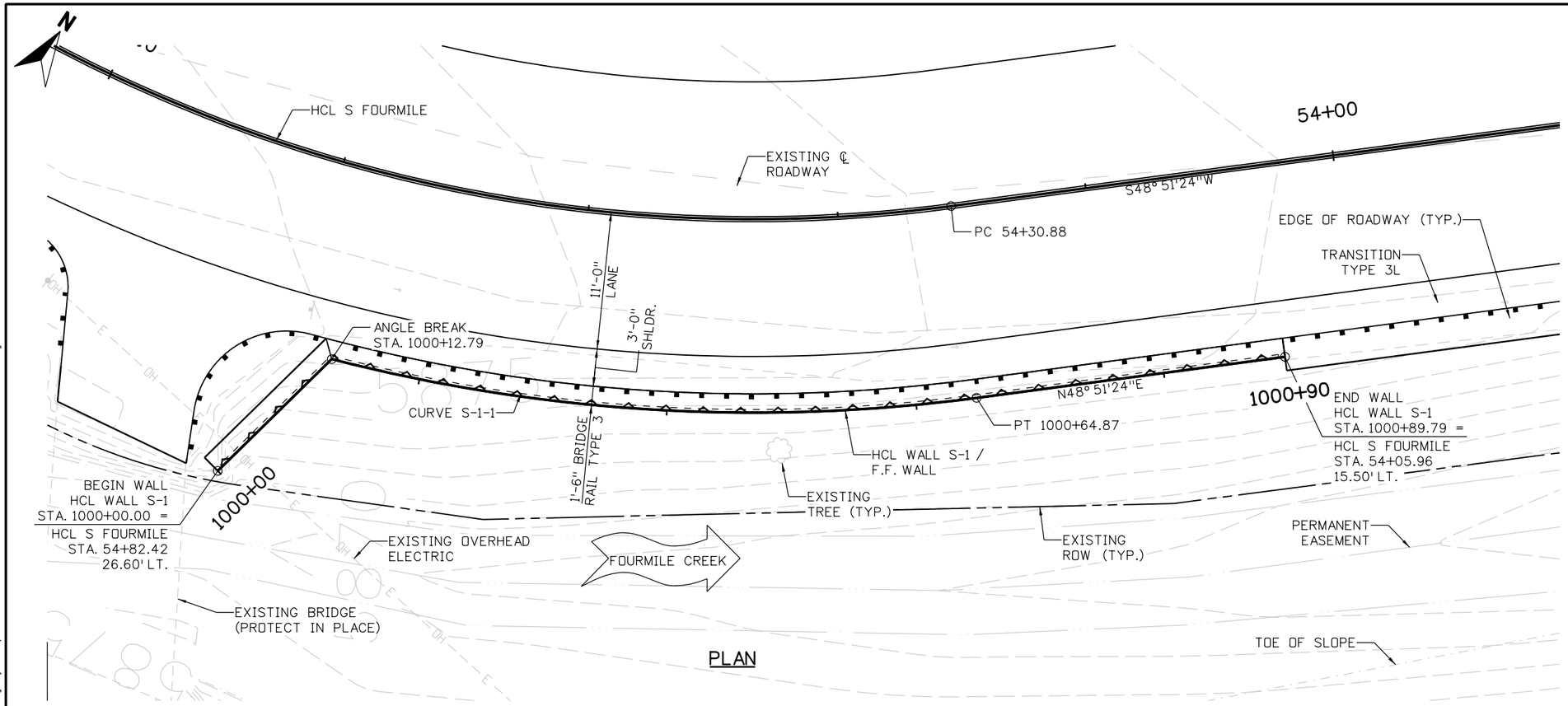

PLAN

NOTES:

1. FOR FINISHED GRADING REFER TO DRAINAGE PLANS.
2. FOR REMOVALS, UTILITY, AND GUARDRAIL INFORMATION REFER TO ROADWAY PLANS.
3. FOR ROADWAY GEOMETRICS, REFER TO ROADWAY PLANS.
4. A GEOTECHNICAL INVESTIGATION FOR A WALL AT THIS LOCATION HAS NOT BEEN COMPLETED AT THIS TIME.
5. FOR WALL TYPICAL SECTION, SEE TYPICAL SECTIONS SHEET.
6. FOR WALL HCL DATA, SEE GEOMETRIC LAYOUT SHEET.

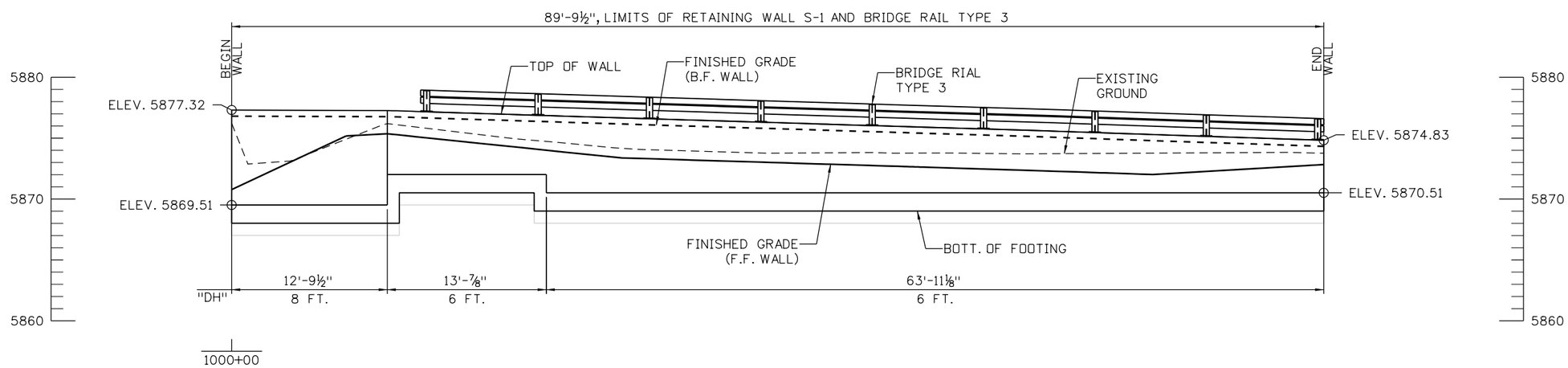

ELEVATION

TAKEN AT HCL WALL S-1 / F.F. WALL

5 0 5 10 FT
SCALE: 1"=10'

60% SET

CALL UTILITY NOTIFICATION CENTER OF COLORADO
811
CALL 2-BUSINESS DAYS IN ADVANCE BEFORE YOU DIG, GRADE, OR EXCAVATE FOR THE MARKING OF UNDERGROUND MEMBER UTILITIES

REVISIONS:	NO.	DATE	REVISION DESCRIPTION:

Boulder County

BOULDER COUNTY TRANSPORTATION DEPARTMENT
ENGINEERING DIVISION

Michael Baker INTERNATIONAL

DESIGNED:	CAD:	CHECKED:	DATE:
DLT	BMT		8/30/2016

FOURMILE CANYON DR
RETAINING WALL S-1
GENERAL LAYOUT

PROJECT NO: 4043.SEPT12C36 | SHEET NO: 146

brett.terrell 5:17:32 PM 8/30/2016 pw:\\DCPWAPP1.bkr.mbakercorp.com:pwprod\Documents\Projects\Lakewood_Office\Boulder_County_Emergency_Transportation\T03\08_Sheet_Files\06_Structures\DGN\138067_Wall_03.dgn

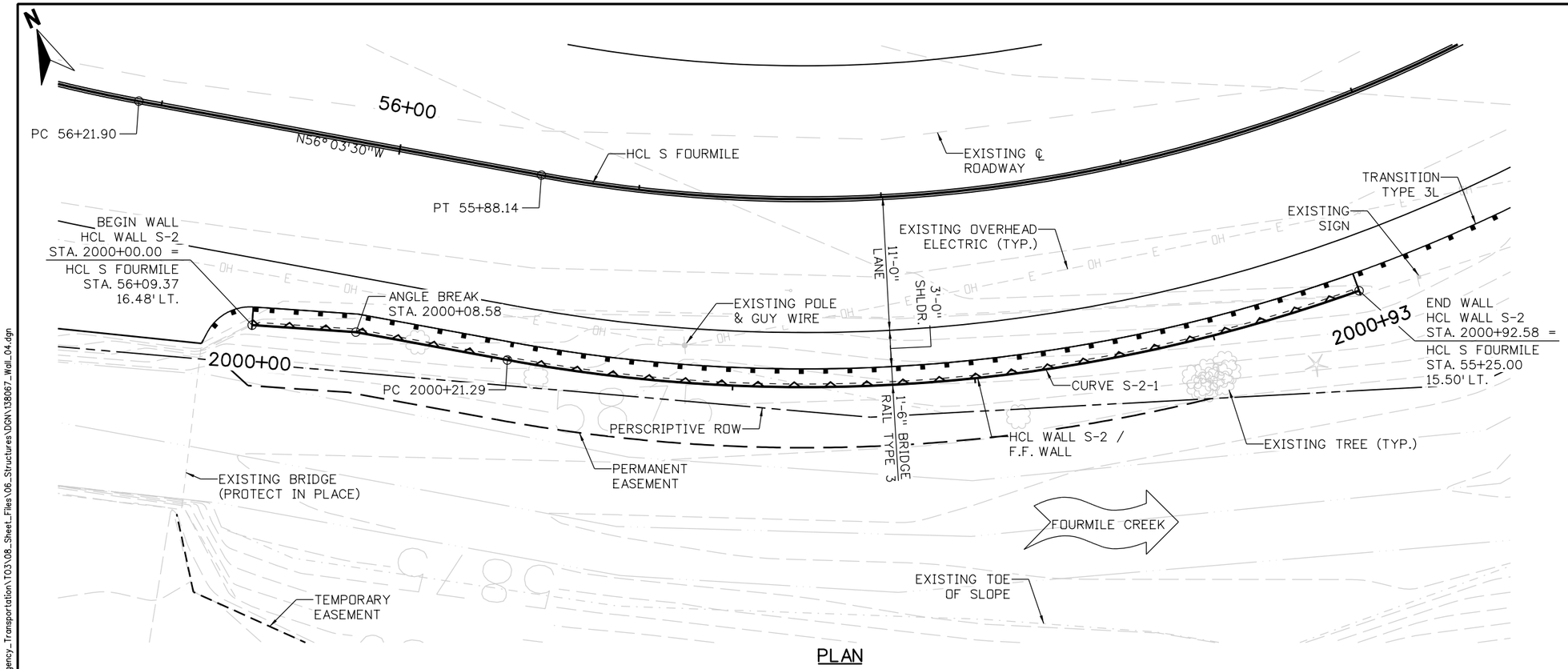

PLAN

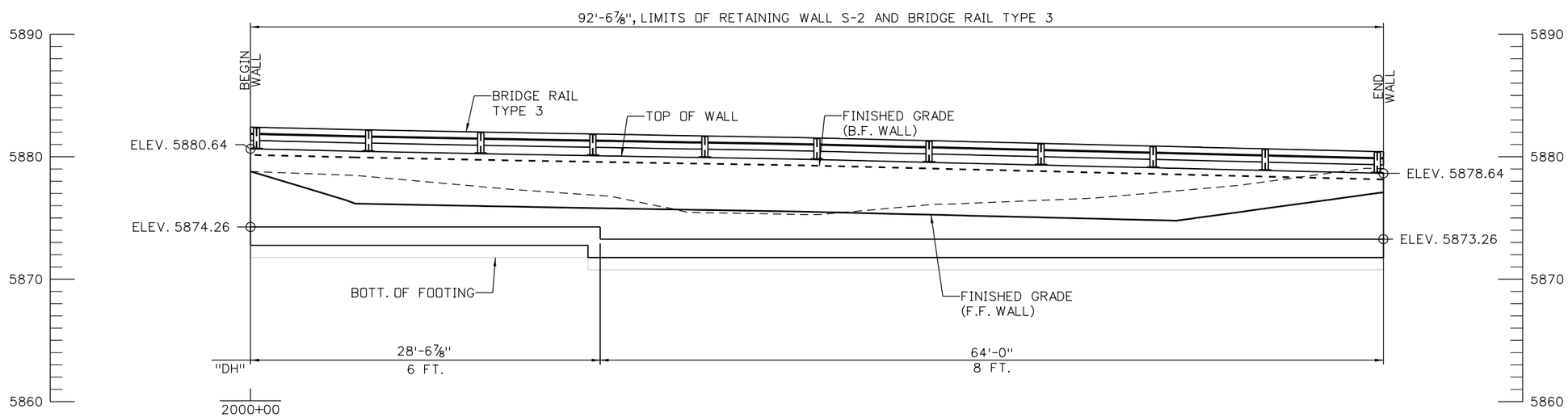

ELEVATION

TAKEN AT HCL WALL S-2 / F.F. WALL

NOTES:

1. FOR FINISHED GRADING REFER TO DRAINAGE PLANS.
2. FOR REMOVALS, UTILITY, AND GUARDRAIL INFORMATION REFER TO ROADWAY PLANS.
3. FOR ROADWAY GEOMETRICS, REFER TO ROADWAY PLANS.
4. A GEOTECHNICAL INVESTIGATION FOR A WALL AT THIS LOCATION HAS NOT BEEN COMPLETED AT THIS TIME.
5. FOR WALL TYPICAL SECTION, SEE TYPICAL SECTIONS SHEET.
6. FOR WALL HCL DATA, SEE GEOMETRIC LAYOUT SHEET.

5 0 5 10 FT
SCALE: 1"=10'

60% SET

CALL UTILITY NOTIFICATION CENTER OF COLORADO
811
CALL 2-BUSINESS DAYS IN ADVANCE BEFORE YOU DIG, GRADE, OR EXCAVATE FOR THE MARKING OF UNDERGROUND MEMBER UTILITIES

REVISIONS:	NO.	DATE	REVISION DESCRIPTION:

Boulder County
Michael Baker INTERNATIONAL

BOULDER COUNTY TRANSPORTATION DEPARTMENT
ENGINEERING DIVISION

DESIGNED:	CAD:	CHECKED:	DATE:
DLT	BMT		8/30/2016

FOURMILE CANYON DR
RETAINING WALL S-2
GENERAL LAYOUT

PROJECT NO: 4043.SEPT12C36 | SHEET NO: 147

brett.terrell 4:56:53 PM 8/30/2016 pw:\\DCPWAPP1.bkr.mbakercorp.com:pwprod\Documents\Projects\Lakewood_Office\Boulder_County_Emergency_Transportation\T03\08_Sheet_Files\06_Structures\DGN\138067_Wall_04.dgn

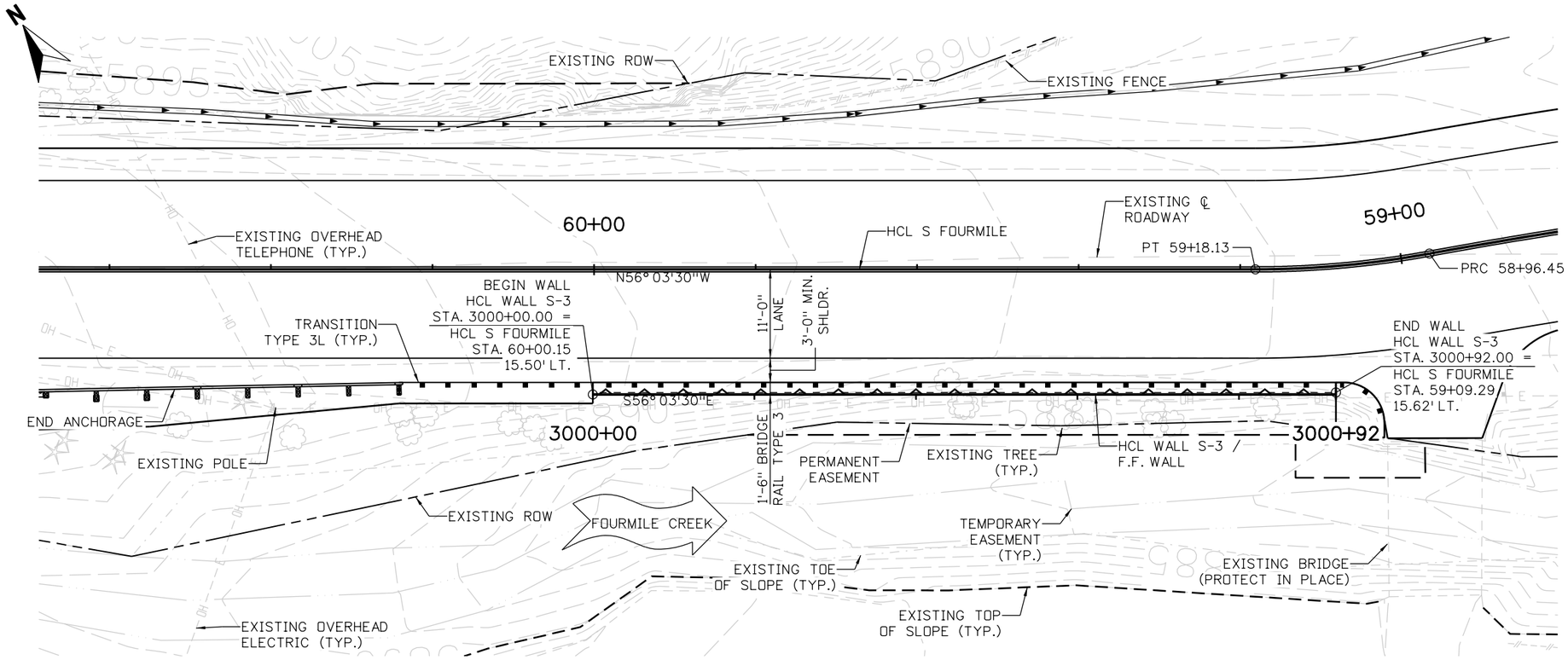

PLAN

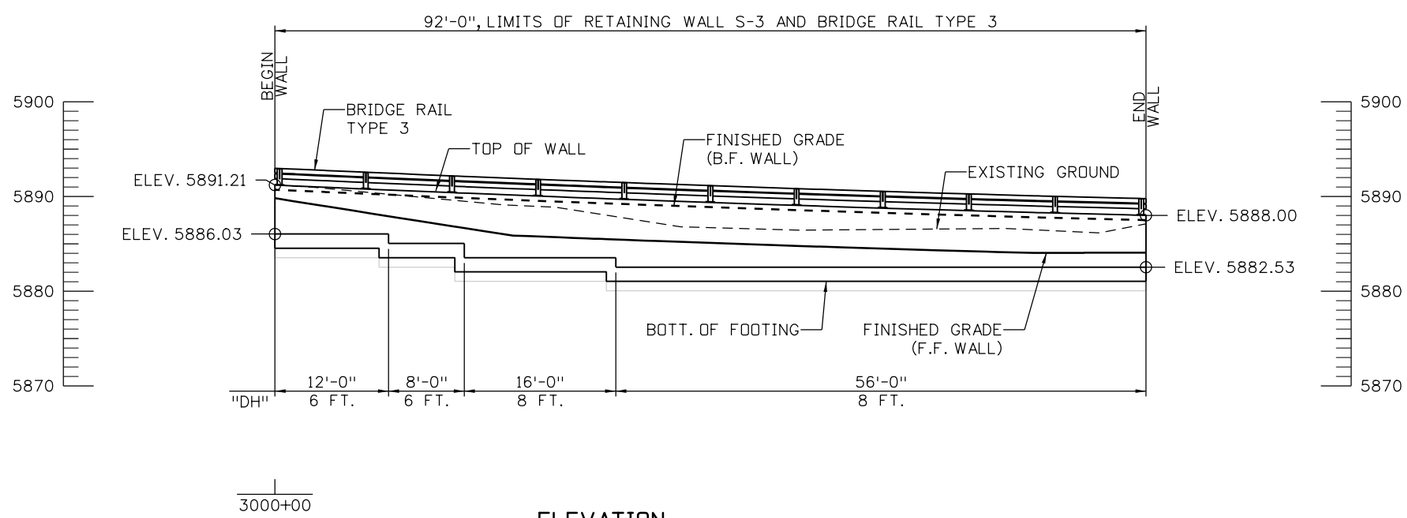

ELEVATION

TAKEN AT HCL WALL S-3 / F.F. WALL

NOTES:

1. FOR FINISHED GRADING REFER TO DRAINAGE PLANS.
2. FOR REMOVALS, UTILITY, AND GUARDRAIL INFORMATION REFER TO ROADWAY PLANS.
3. FOR ROADWAY GEOMETRICS, REFER TO ROADWAY PLANS.
4. A GEOTECHNICAL INVESTIGATION FOR A WALL AT THIS LOCATION HAS NOT BEEN COMPLETED AT THIS TIME.
5. FOR WALL TYPICAL SECTION, SEE TYPICAL SECTIONS SHEET.
6. FOR WALL HCL DATA, SEE GEOMETRIC LAYOUT SHEET.

8 0 8 16 FT
SCALE: 1"=16'

60% SET

CALL UTILITY NOTIFICATION CENTER OF COLORADO
811
CALL 2-BUSINESS DAYS IN ADVANCE BEFORE YOU DIG, GRADE, OR EXCAVATE FOR THE MARKING OF UNDERGROUND MEMBER UTILITIES

REVISIONS:	NO.	DATE	REVISION DESCRIPTION:

Boulder County

BOULDER COUNTY TRANSPORTATION DEPARTMENT
ENGINEERING DIVISION

Michael Baker INTERNATIONAL

DESIGNED:	CAD:	CHECKED:	DATE:
DLT	BMT		8/30/2016

FOURMILE CANYON DR
RETAINING WALL S-3
GENERAL LAYOUT

PROJECT NO: 4043.SEPT12C36 | SHEET NO: 148

brett.terrell 4:57:11 PM 8/30/2016 pw:\\DCPWAPP1.bkr.mbakercorp.com:pwprod\Documents\Projects\Lakewood_Office\Boulder_County_Emergency_Transportation\T03\08_Sheet_Files\06_Structures\DGN\138067_Wall_05.dgn

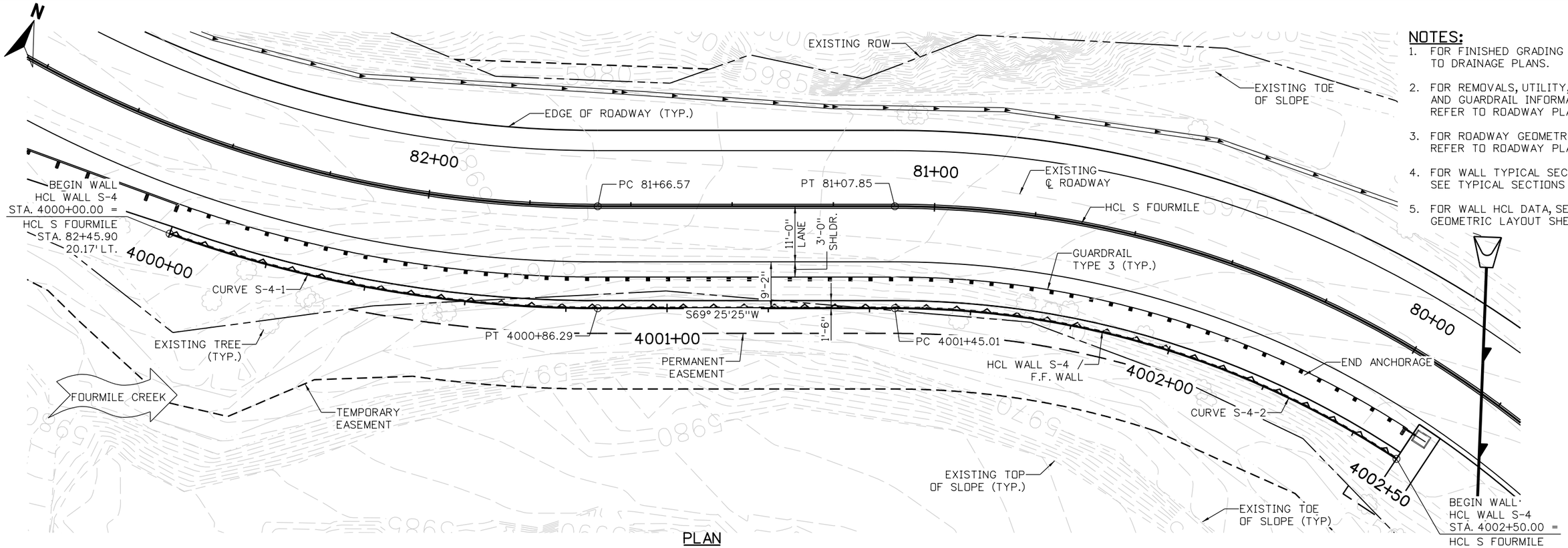

PLAN

NOTES:

1. FOR FINISHED GRADING REFER TO DRAINAGE PLANS.
2. FOR REMOVALS, UTILITY, AND GUARDRAIL INFORMATION REFER TO ROADWAY PLANS.
3. FOR ROADWAY GEOMETRICS, REFER TO ROADWAY PLANS.
4. FOR WALL TYPICAL SECTION, SEE TYPICAL SECTIONS SHEET.
5. FOR WALL HCL DATA, SEE GEOMETRIC LAYOUT SHEET.

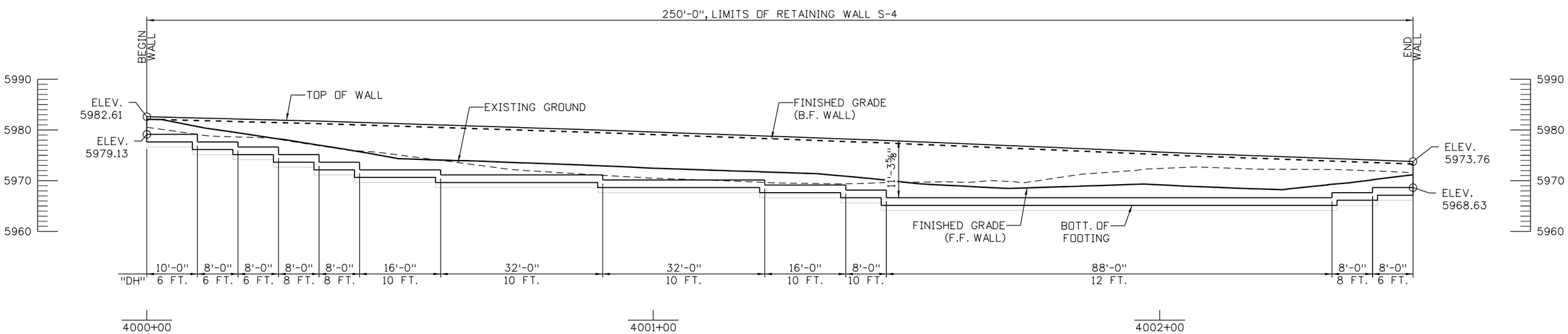

ELEVATION

TAKEN AT HCL WALL S-4 / F.F. WALL

10 0 10 20 FT
SCALE: 1"=20'

60% SET

CALL UTILITY NOTIFICATION CENTER OF COLORADO
CALL 2-BUSINESS DAYS IN ADVANCE BEFORE YOU DIG, GRADE, OR EXCAVATE FOR THE MARKING OF UNDERGROUND MEMBER UTILITIES

REVISIONS:	NO.	DATE	REVISION DESCRIPTION:

Boulder County

BOULDER COUNTY TRANSPORTATION DEPARTMENT
ENGINEERING DIVISION

Michael Baker INTERNATIONAL

DESIGNED:	CAD:	CHECKED:	DATE:
DLT	BMT		8/30/2016

FOURMILE CANYON DR
RETAINING WALL S-4
GENERAL LAYOUT

PROJECT NO: 4043.SEPT12C36 | SHEET NO: 149

brett.terrell 4:57:31 PM 8/30/2016 pw:\\DCPWAPP1.bkr.mbakercorp.com:pwprod\Documents\Projects\Lakewood_Office\Boulder_County_Emergency_Transportation\T03\08_Sheet_Files\06_Structures\DGN\138067_Wall_06.dgn

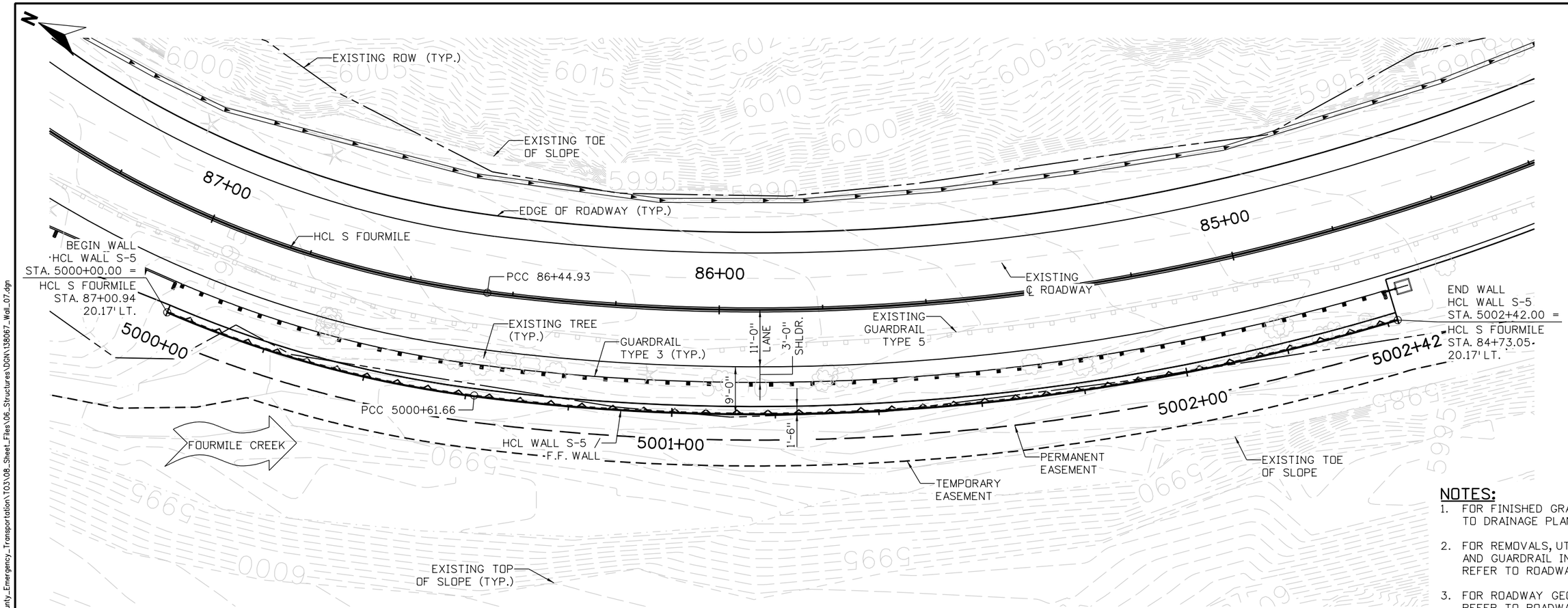

PLAN

NOTES:

1. FOR FINISHED GRADING REFER TO DRAINAGE PLANS.
2. FOR REMOVALS, UTILITY, AND GUARDRAIL INFORMATION REFER TO ROADWAY PLANS.
3. FOR ROADWAY GEOMETRICS, REFER TO ROADWAY PLANS.
4. FOR WALL TYPICAL SECTION, SEE TYPICAL SECTIONS SHEET.
5. FOR WALL HCL DATA, SEE GEOMETRIC LAYOUT SHEET.

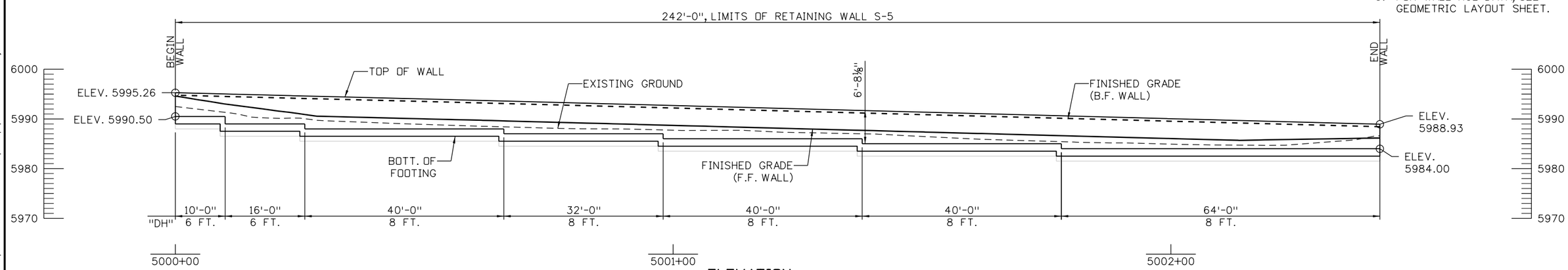

ELEVATION

TAKEN ALONG HCL WALL S-5 / F.F. WALL

10 0 10 20 FT
SCALE: 1"=20'

60% SET

CALL UTILITY NOTIFICATION CENTER OF COLORADO
811
CALL 2-BUSINESS DAYS IN ADVANCE BEFORE YOU DIG, GRADE, OR EXCAVATE FOR THE MARKING OF UNDERGROUND MEMBER UTILITIES

REVISIONS:	NO.	DATE	REVISION DESCRIPTION:

Boulder County

BOULDER COUNTY TRANSPORTATION DEPARTMENT
ENGINEERING DIVISION

Michael Baker INTERNATIONAL

DESIGNED:	CAD:	CHECKED:	DATE:
DLT	BMT		8/30/2016

FOURMILE CANYON DR
RETAINING WALL S-5
GENERAL LAYOUT

PROJECT NO: 4043.SEPT12C36 | SHEET NO: 150

brett.terrell 4:57:50 PM 8/30/2016 pw:\\DCPWAPP1.bkr.mbakercorp.com:pwprod\Documents\Projects\Lakewood_Office\Boulder_County_Emergency_Transportation\T03\08_Sheet_Files\06_Structures\DGN\138067_Wall_07.dgn

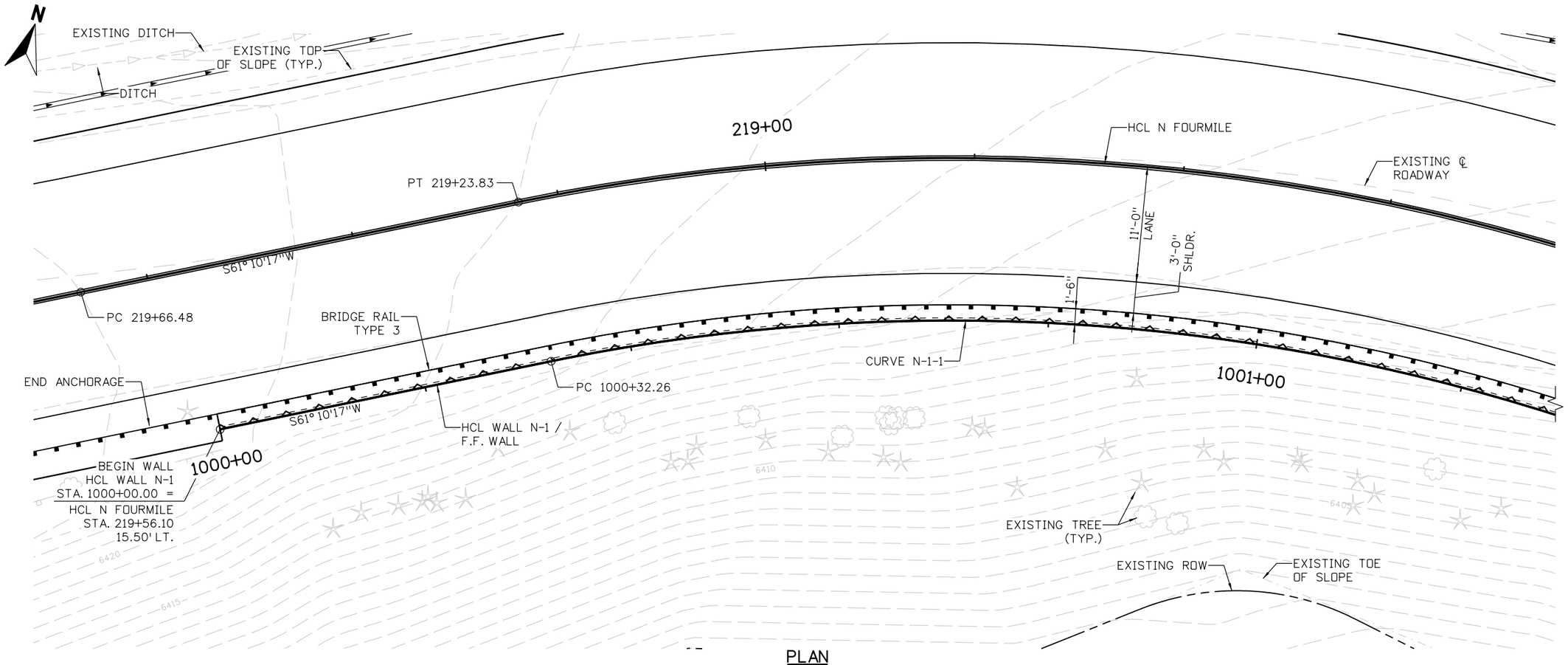

PLAN

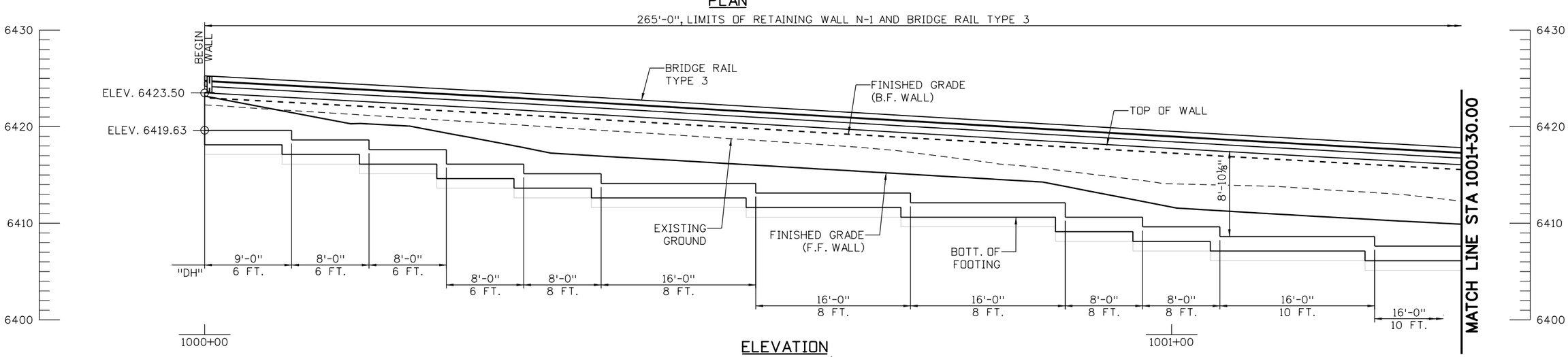

ELEVATION

TAKEN AT HCL WALL N-1 / F.F. WALL

NOTES:

1. FOR FINISHED GRADING REFER TO DRAINAGE PLANS.
2. FOR REMOVALS, UTILITY, AND GUARDRAIL INFORMATION REFER TO ROADWAY PLANS.
3. FOR ROADWAY GEOMETRICS, REFER TO ROADWAY PLANS.
4. GEOTECHNICAL REPORT HAS NOT BEEN COMPLETED AT THIS TIME.

5.333 0 5.333 10.666 FT
SCALE: 1"=10.666'

60% SET

CALL UTILITY NOTIFICATION CENTER OF COLORADO
811
CALL 2-BUSINESS DAYS IN ADVANCE BEFORE YOU DIG, GRADE, OR EXCAVATE FOR THE MARKING OF UNDERGROUND MEMBER UTILITIES

REVISIONS:	NO.	DATE	REVISION DESCRIPTION:

Boulder County

BOULDER COUNTY TRANSPORTATION DEPARTMENT
ENGINEERING DIVISION

Michael Baker INTERNATIONAL

DESIGNED:	CAD:	CHECKED:	DATE:
DLT	BMT		8/30/2016

FOURMILE CANYON DR
RETAINING WALL N-1
GENERAL LAYOUT (1 OF 2)

PROJECT NO: 4043.SEPT12C36 | SHEET NO: 151

brett.terrell 4:58:08 PM 8/30/2016 pw:\\DCPWAPP1.bkr.mbakercorp.com:pwprod\Documents\Projects\Lakewood_Office\Boulder_County_Emergency_Transportation\T03\08_Sheet_Files\06_Structures\DGN\138067_Wall_10.dgn

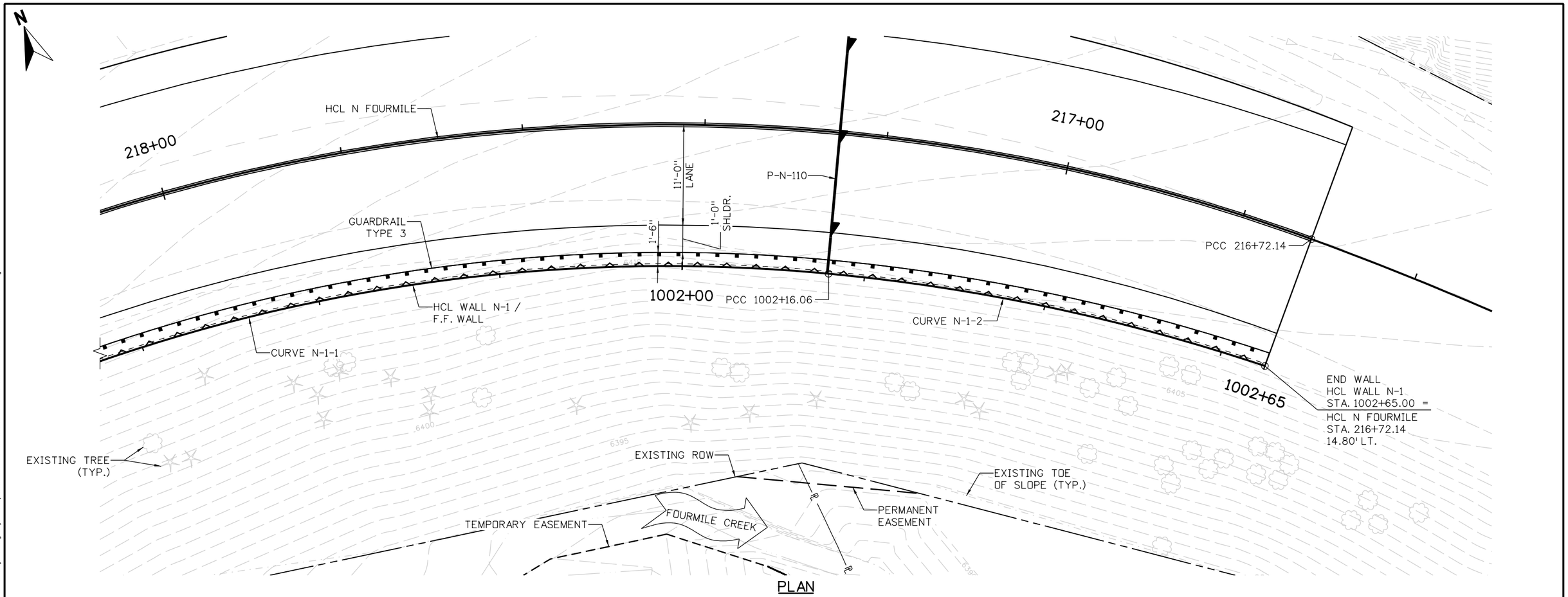

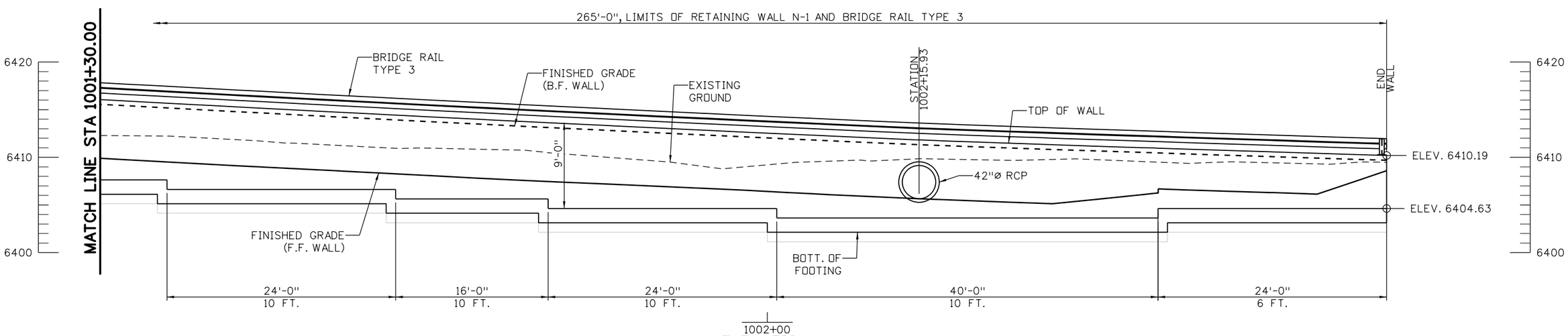

5.333 0 5.333 10.666 FT
SCALE: 1"=10.666'

60% SET

CALL UTILITY NOTIFICATION CENTER OF COLORADO
811
CALL 2-BUSINESS DAYS IN ADVANCE BEFORE YOU DIG, GRADE, OR EXCAVATE FOR THE MARKING OF UNDERGROUND MEMBER UTILITIES

REVISIONS: NO.	DATE	REVISION DESCRIPTION:

Boulder County

Michael Baker INTERNATIONAL

BOULDER COUNTY TRANSPORTATION DEPARTMENT
ENGINEERING DIVISION

DESIGNED:	CAD:	CHECKED:	DATE:
DLT	BMT		8/30/2016

FOURMILE CANYON DR
RETAINING WALL N-1
GENERAL LAYOUT (2 OF 2)

PROJECT NO: 4043.SEPT12C36 | SHEET NO: 152

brett.terrell 4:58:25 PM 8/30/2016 pw:\\DCPWAPP1.bkr.mbakercorp.com:pwprod\Documents\Projects\Lakewood_Office\Boulder_County_Emergency_Transportation\T03\08_Sheet_Files\06_Structures\DGN\138067_Wall_11.dgn

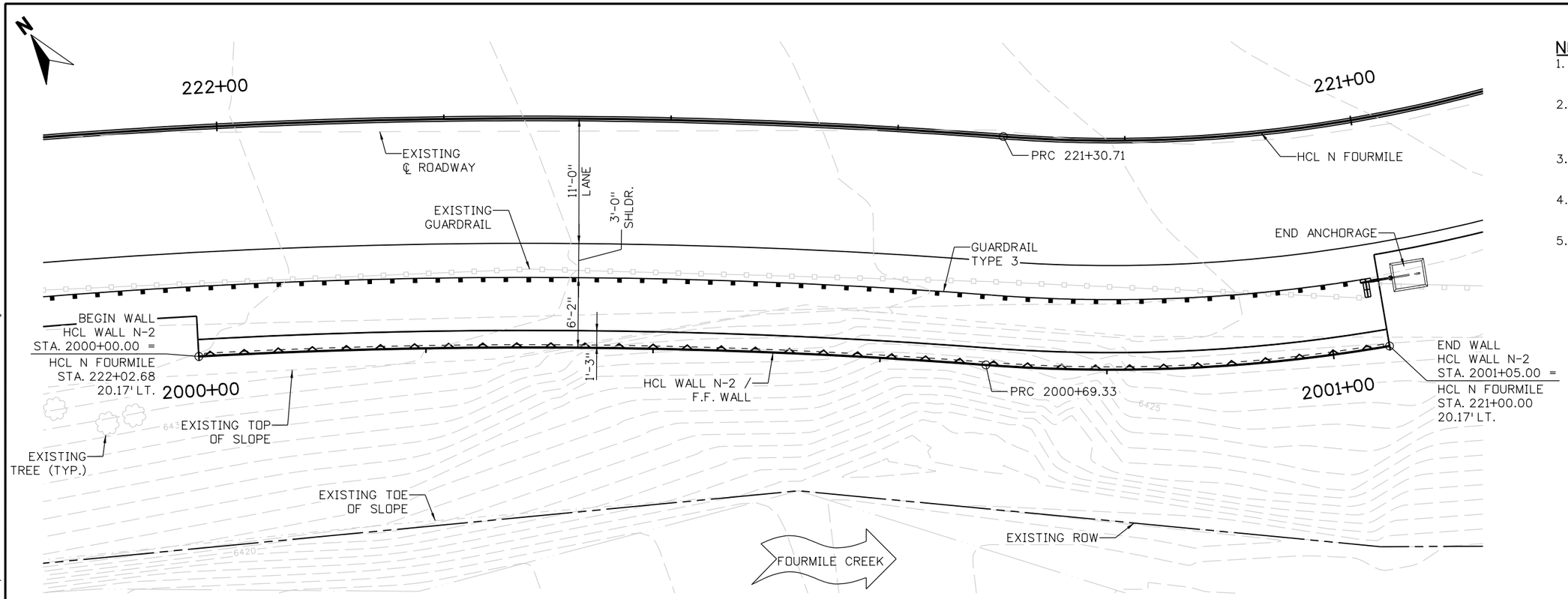

PLAN

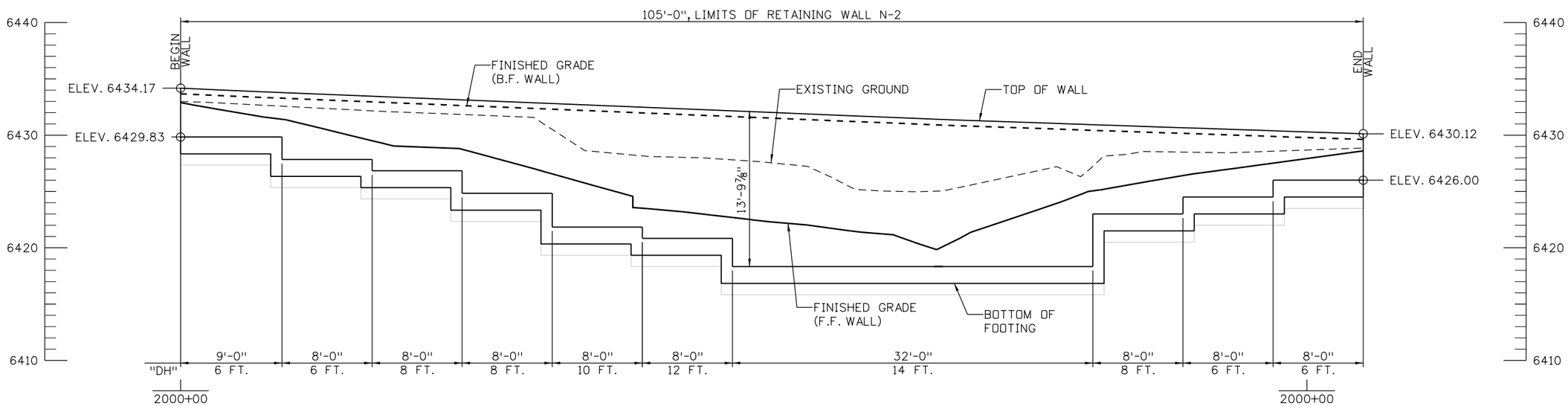

ELEVATION

TAKEN ALONG HCL WALL N-2 / F.F. WALL

NOTES:

1. FOR FINISHED GRADING REFER TO DRAINAGE PLANS.
2. FOR REMOVALS, UTILITY, AND GUARDRAIL INFORMATION REFER TO ROADWAY PLANS.
3. FOR ROADWAY GEOMETRICS, REFER TO ROADWAY PLANS.
4. FOR WALL TYPICAL SECTION, SEE TYPICAL SECTIONS SHEET.
5. FOR WALL HCL DATA, SEE GEOMETRIC LAYOUT SHEET.

5 0 5 10 FT
SCALE: 1"=10'

60% SET

CALL UTILITY NOTIFICATION CENTER OF COLORADO
811
CALL 2-BUSINESS DAYS IN ADVANCE BEFORE YOU DIG, GRADE, OR EXCAVATE FOR THE MARKING OF UNDERGROUND MEMBER UTILITIES

REVISIONS:	NO.	DATE	REVISION DESCRIPTION:

Boulder County

BOULDER COUNTY TRANSPORTATION DEPARTMENT
ENGINEERING DIVISION

Michael Baker INTERNATIONAL

DESIGNED:	CAD:	CHECKED:	DATE:
DLT	BMT		8/30/2016

FOURMILE CANYON DR
RETAINING WALL N-2
GENERAL LAYOUT

PROJECT NO: 4043.SEPT12C36 | SHEET NO: 153

brett.terrell 4:58:42 PM 8/30/2016 pw:\\DCPWAPP1.bkr.mbakercorp.com:pwprod\Documents\Projects\Lakewood_Office\Boulder_County_Emergency_Transportation\T03\08_Sheet_Files\06_Structures\DGN\138067_Wall_12.dgn

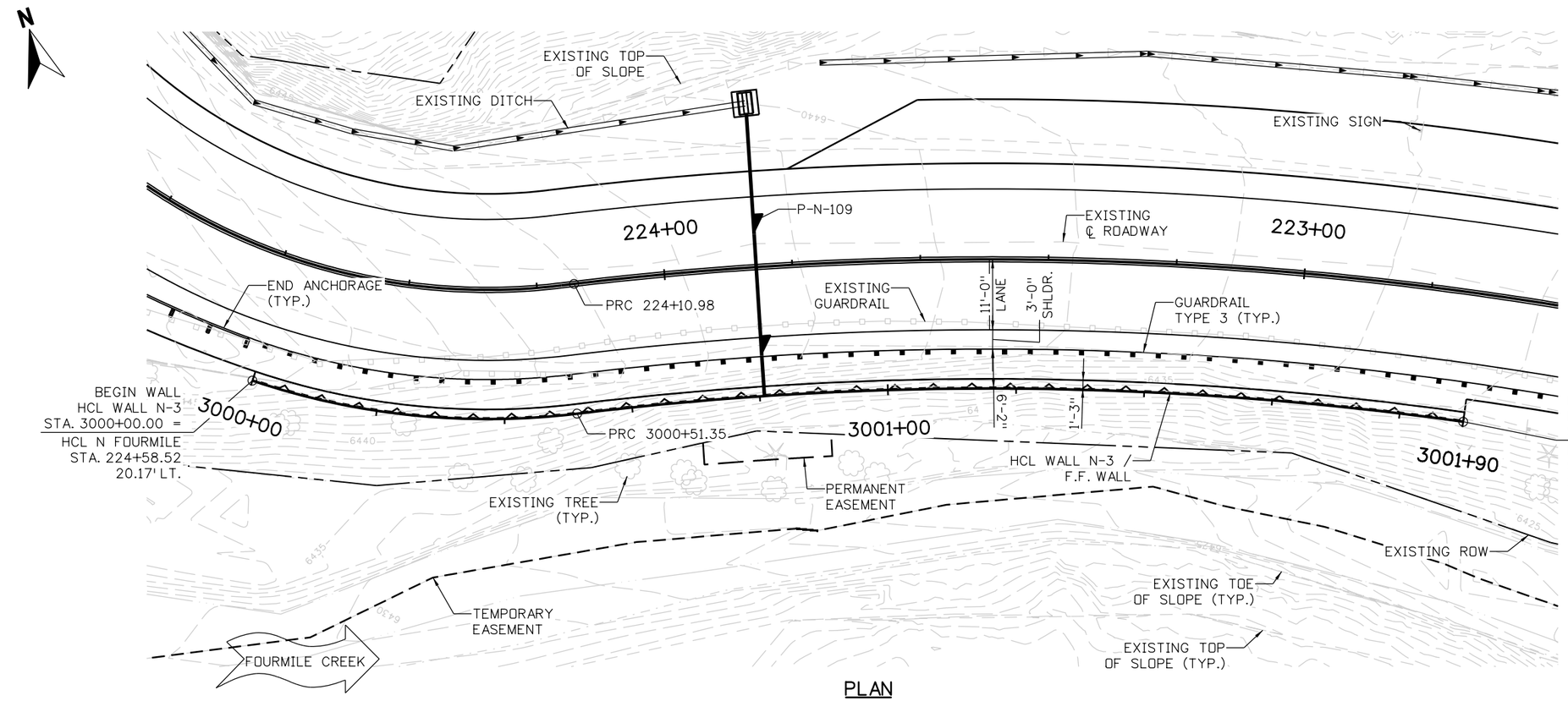

PLAN

NOTES:

1. FOR FINISHED GRADING REFER TO DRAINAGE PLANS.
2. FOR REMOVALS, UTILITY, AND GUARDRAIL INFORMATION REFER TO ROADWAY PLANS.
3. FOR ROADWAY GEOMETRICS, REFER TO ROADWAY PLANS.
4. FOR WALL TYPICAL SECTION, SEE TYPICAL SECTIONS SHEET.
5. FOR WALL HCL DATA, SEE GEOMETRIC LAYOUT SHEET.

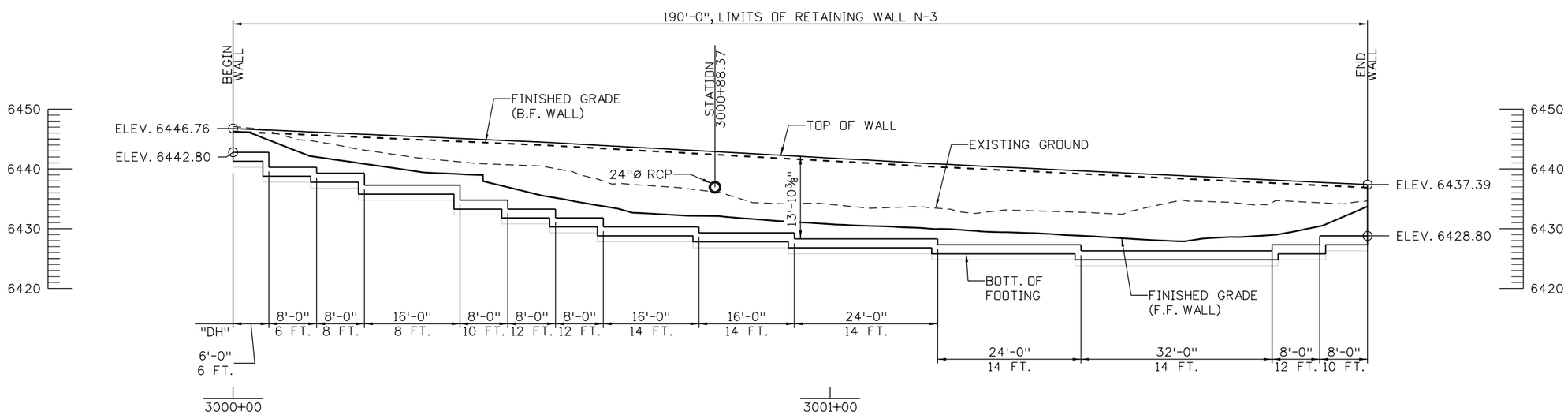

ELEVATION

TAKEN ALONG HCL WALL N-3 / F.F. WALL

10 0 10 20 FT
SCALE: 1"=20'

60% SET

CALL UTILITY NOTIFICATION CENTER OF COLORADO
811
CALL 2-BUSINESS DAYS IN ADVANCE BEFORE YOU DIG, GRADE, OR EXCAVATE FOR THE MARKING OF UNDERGROUND MEMBER UTILITIES

REVISIONS:	NO.	DATE	REVISION DESCRIPTION:

Boulder County
Michael Baker INTERNATIONAL

BOULDER COUNTY TRANSPORTATION DEPARTMENT
ENGINEERING DIVISION

DESIGNED:	CAD:	CHECKED:	DATE:
DLT	BMT		8/30/2016

FOURMILE CANYON DR
RETAINING WALL N-3
GENERAL LAYOUT

PROJECT NO: 4043.SEPT12C36 | SHEET NO: 154

brett.terrell 4:58:59 PM 8/30/2016 pw:\\DCPWAPP1.bkr.mbakercorp.com:pwprod\Documents\Projects\Lakewood_Office\Boulder_County_Emergency_Transportation\T03\08_Sheet_Files\06_Structures\DGN\138067_Wall_13.dgn

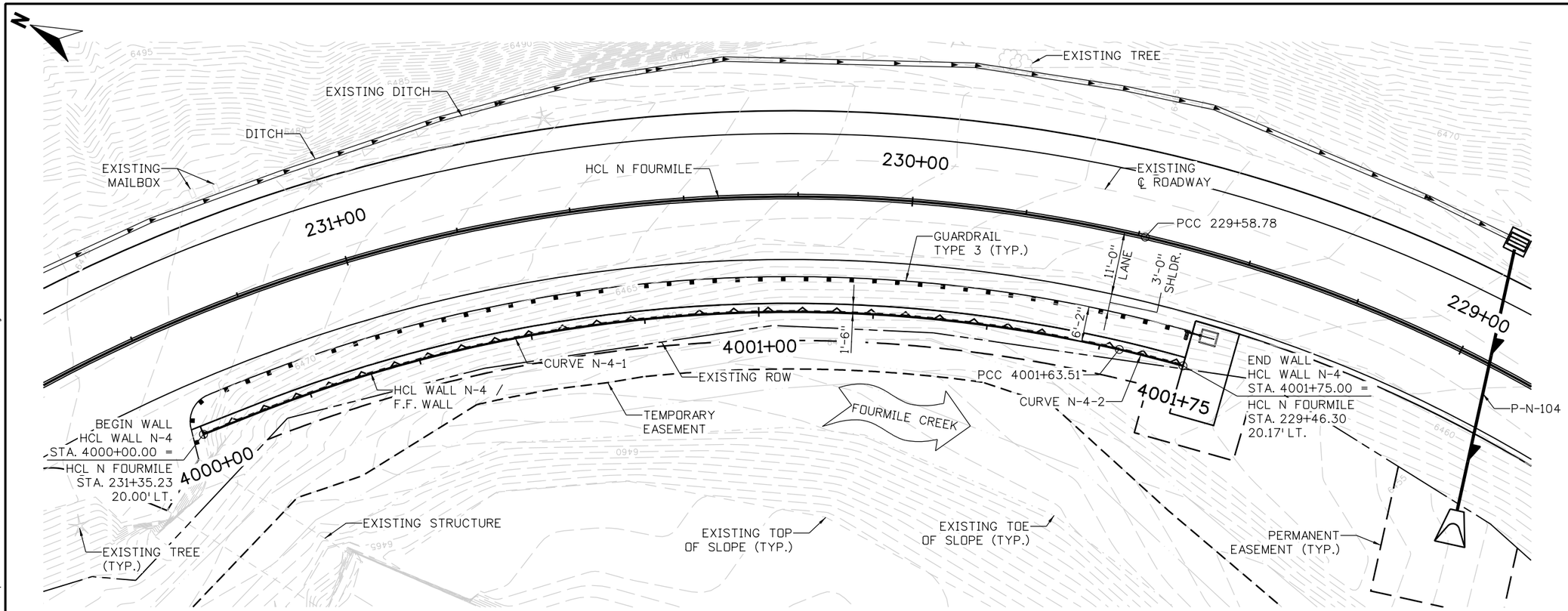

PLAN

NOTES:

1. FOR FINISHED GRADING REFER TO DRAINAGE PLANS.
2. FOR REMOVALS, UTILITY, AND GUARDRAIL INFORMATION REFER TO ROADWAY PLANS.
3. FOR ROADWAY GEOMETRICS, REFER TO ROADWAY PLANS.
4. FOR WALL TYPICAL SECTION, SEE TYPICAL SECTIONS SHEET.
5. FOR WALL HCL DATA, SEE GEOMETRIC LAYOUT SHEET.

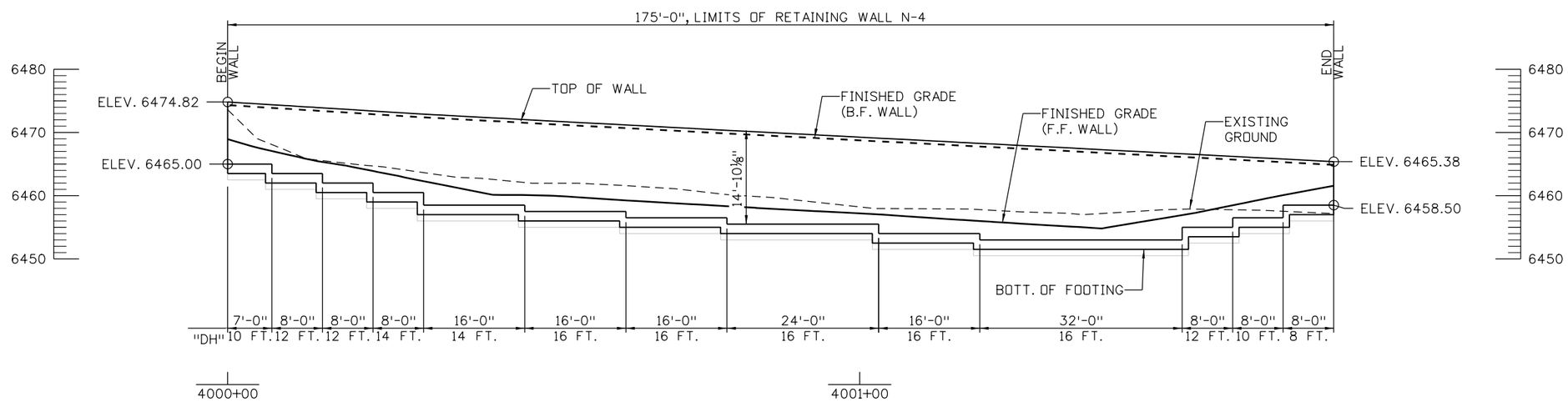

ELEVATION

TAKEN ALONG HCL WALL N-4 / F.F. WALL

10 0 10 20 FT
SCALE: 1"=20'

60% SET

CALL UTILITY NOTIFICATION CENTER OF COLORADO
811
CALL 2-BUSINESS DAYS IN ADVANCE BEFORE YOU DIG, GRADE, OR EXCAVATE FOR THE MARKING OF UNDERGROUND MEMBER UTILITIES

REVISIONS:	NO.	DATE	REVISION DESCRIPTION:

Boulder County

BOULDER COUNTY TRANSPORTATION DEPARTMENT
ENGINEERING DIVISION

Michael Baker INTERNATIONAL

DESIGNED:	CAD:	CHECKED:	DATE:
DLT	BMT		8/30/2016

FOURMILE CANYON DR
RETAINING WALL N-4
GENERAL LAYOUT

PROJECT NO: 4043.SEPT12C36 | SHEET NO: 155

brett.terrell 4:59:17 PM 8/30/2016 pw:\\DCPWAPP1.bkr.mbakercorp.com:pwprod\Documents\Projects\Lakewood_Office\Boulder_County_Emergency_Transportation\T03\08_Sheet_Files\06_Structures\DGN\138067_Wall_14.dgn

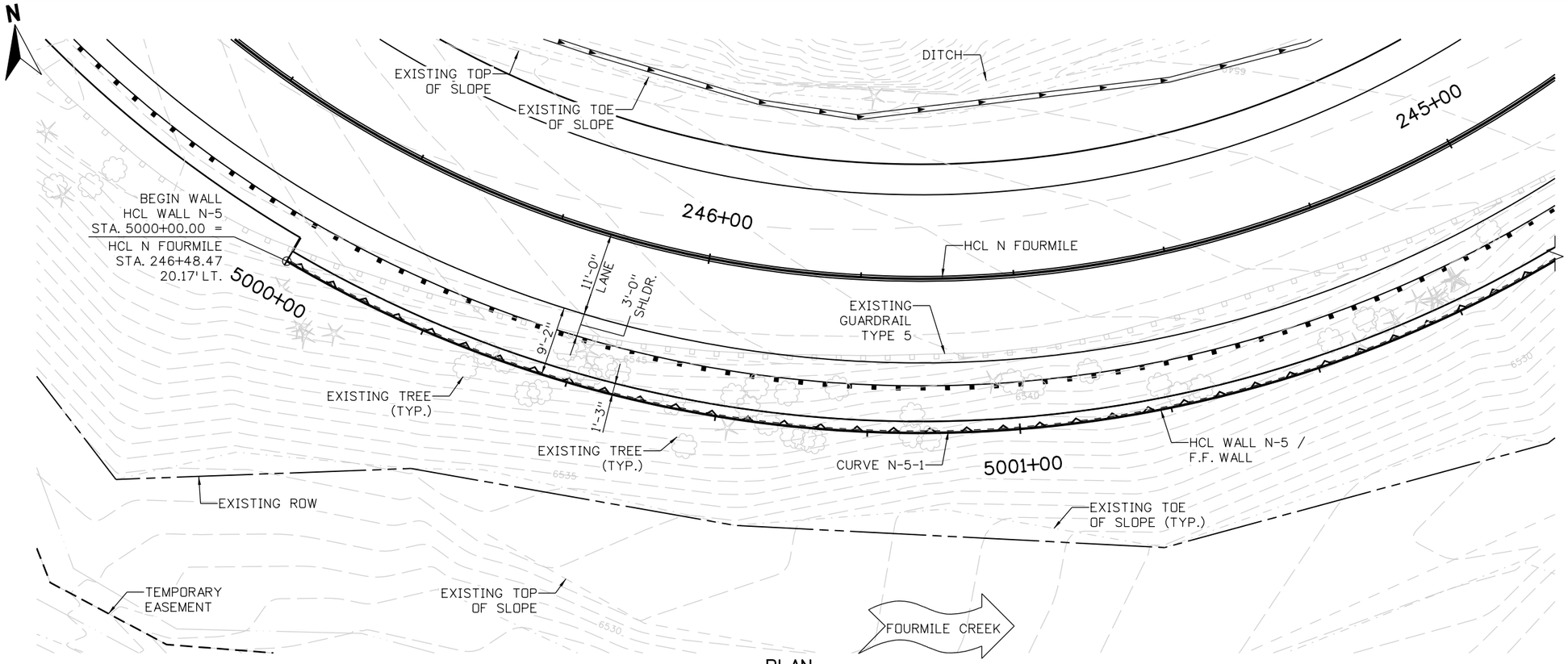

PLAN

NOTES:

1. FOR FINISHED GRADING REFER TO DRAINAGE PLANS.
2. FOR REMOVALS, UTILITY, AND GUARDRAIL INFORMATION REFER TO ROADWAY PLANS.
3. FOR ROADWAY GEOMETRICS, REFER TO ROADWAY PLANS.
4. A GEOTECHNICAL INVESTIGATION FOR A WALL AT THIS LOCATION HAS NOT BEEN COMPLETED AT THIS TIME.
5. FOR WALL TYPICAL SECTION, SEE TYPICAL SECTIONS SHEET.
6. FOR WALL HCL DATA, SEE GEOMETRIC LAYOUT SHEET.

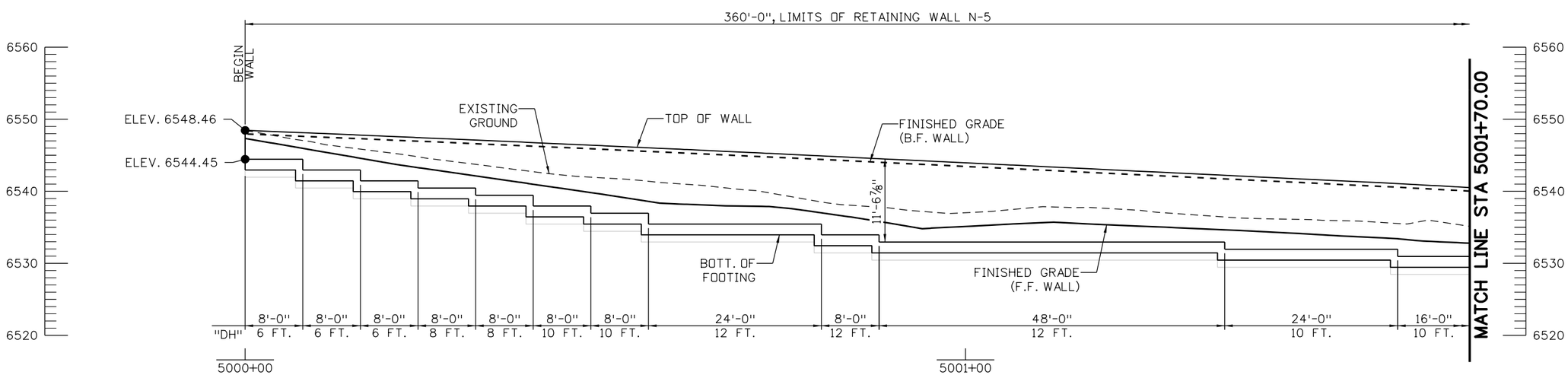

ELEVATION

TAKEN AT HCL WALL N-5 / F.F. WALL

8 0 8 16 FT

SCALE: 1"=16'

60% SET

CALL UTILITY NOTIFICATION CENTER OF COLORADO

811

CALL 2-BUSINESS DAYS IN ADVANCE BEFORE YOU DIG, GRADE, OR EXCAVATE FOR THE MARKING OF UNDERGROUND MEMBER UTILITIES

REVISIONS:	NO.	DATE	REVISION DESCRIPTION:

Boulder County

Michael Baker INTERNATIONAL

BOULDER COUNTY TRANSPORTATION DEPARTMENT
ENGINEERING DIVISION

DESIGNED:	CAD:	CHECKED:	DATE:
DLT	BMT		8/30/2016

FOURMILE CANYON DR
RETAINING WALL N-5
GENERAL LAYOUT (1 OF 2)

PROJECT NO: 4043.SEPT12C36 | SHEET NO: 156

brett.terrell 4:59:34 PM 8/30/2016 pw:\\DCPWAPP1.bkr.mbakercorp.com:pwprod\Documents\Projects\Lakewood_Office\Boulder_County_Emergency_Transportation\T03\08_Sheet_Files\06_Structures\DGN\138067_Wall_15.dgn

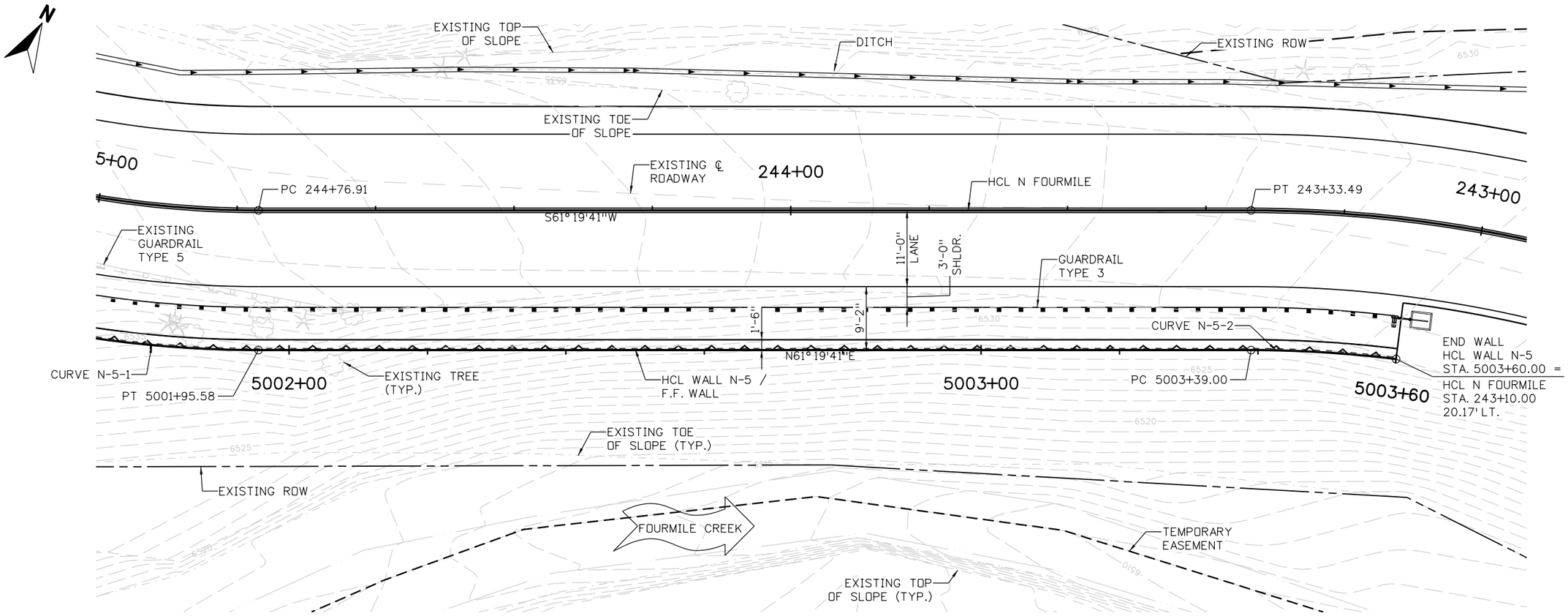

PLAN

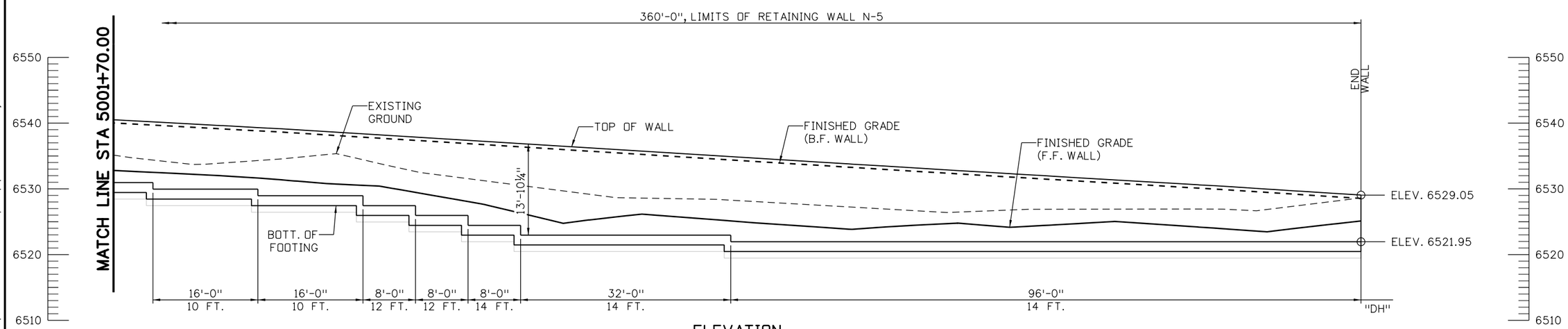

ELEVATION

TAKEN AT HCL WALL N-5 / F.F. WALL

8 0 8 16 FT
SCALE: 1"=16'

60% SET

CALL UTILITY NOTIFICATION CENTER OF COLORADO
811
CALL 2-BUSINESS DAYS IN ADVANCE BEFORE YOU DIG, GRADE, OR EXCAVATE FOR THE MARKING OF UNDERGROUND MEMBER UTILITIES

REVISIONS:	NO.	DATE	REVISION DESCRIPTION:

Boulder County

BOULDER COUNTY TRANSPORTATION DEPARTMENT
ENGINEERING DIVISION

Michael Baker INTERNATIONAL

DESIGNED:	CAD:	CHECKED:	DATE:
DLT	BMT		8/30/2016

FOURMILE CANYON DR
RETAINING WALL N-5
GENERAL LAYOUT (2 OF 2)

PROJECT NO: 4043.SEPT12C36 | SHEET NO: 157

brett.terrell 4:59:52 PM 8/30/2016 pw:\\DCPWAPP1.bkr.mbakercorp.com:pwprod\Documents\Projects\Lakewood_Office\Boulder_County_Emergency_Transportation\T03\08_Sheet_Files\06_Structures\DGN\138067_Wall_16.dgn

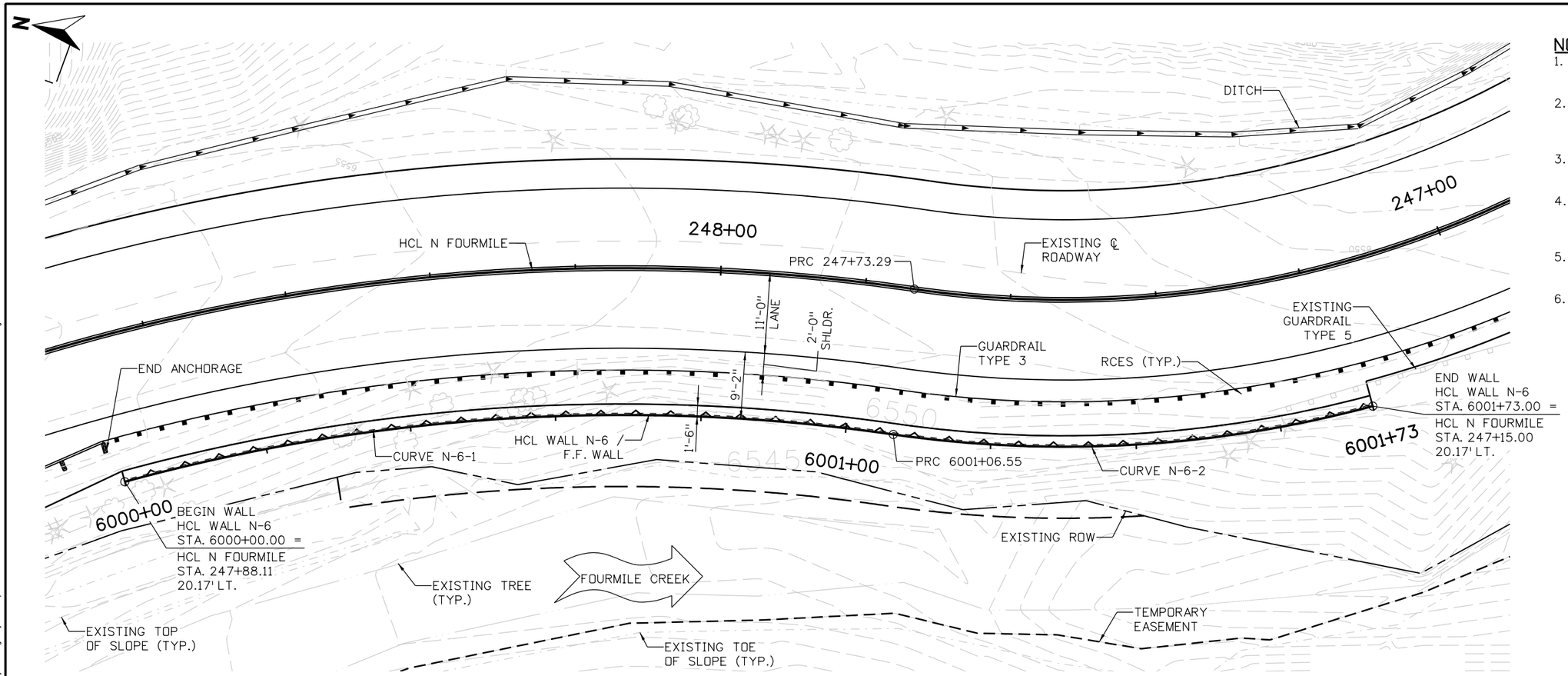

PLAN

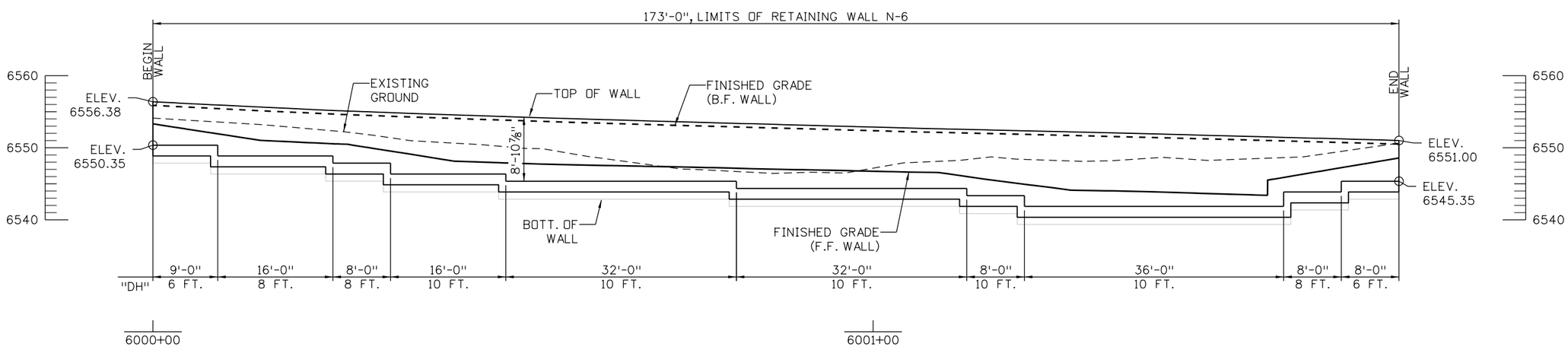

ELEVATION

TAKEN AT HCL WALL N-6 / F.F. WALL

NOTES:

1. FOR FINISHED GRADING REFER TO DRAINAGE PLANS.
2. FOR REMOVALS, UTILITY, AND GUARDRAIL INFORMATION REFER TO ROADWAY PLANS.
3. FOR ROADWAY GEOMETRICS, REFER TO ROADWAY PLANS.
4. A GEOTECHNICAL INVESTIGATION FOR A WALL AT THIS LOCATION HAS NOT BEEN COMPLETED AT THIS TIME.
5. FOR WALL TYPICAL SECTION, SEE TYPICAL SECTIONS SHEET.
6. FOR WALL HCL DATA, SEE GEOMETRIC LAYOUT SHEET.

8 0 8 16 FT
SCALE: 1"=16'

60% SET

CALL UTILITY NOTIFICATION CENTER OF COLORADO
811
CALL 2-BUSINESS DAYS IN ADVANCE BEFORE YOU DIG, GRADE, OR EXCAVATE FOR THE MARKING OF UNDERGROUND MEMBER UTILITIES

REVISIONS:	NO.	DATE	REVISION DESCRIPTION:

Boulder County

BOULDER COUNTY TRANSPORTATION DEPARTMENT
ENGINEERING DIVISION

Michael Baker INTERNATIONAL

DESIGNED:	CAD:	CHECKED:	DATE:
DLT	BMT		8/30/2016

FOURMILE CANYON DR
RETAINING WALL N-6
GENERAL LAYOUT

PROJECT NO: 4043.SEPT12C36 | SHEET NO: 158

brett.terrell 5:00:09 PM 8/30/2016 pw:\\DCPWAPP1.bkr.mbakercorp.com:pwprod\Documents\Projects\Lakewood_Office\Boulder_County_Emergency_Transportation\T03\08_Sheet_Files\06_Structures\DGN\138067_Wall_17.dgn

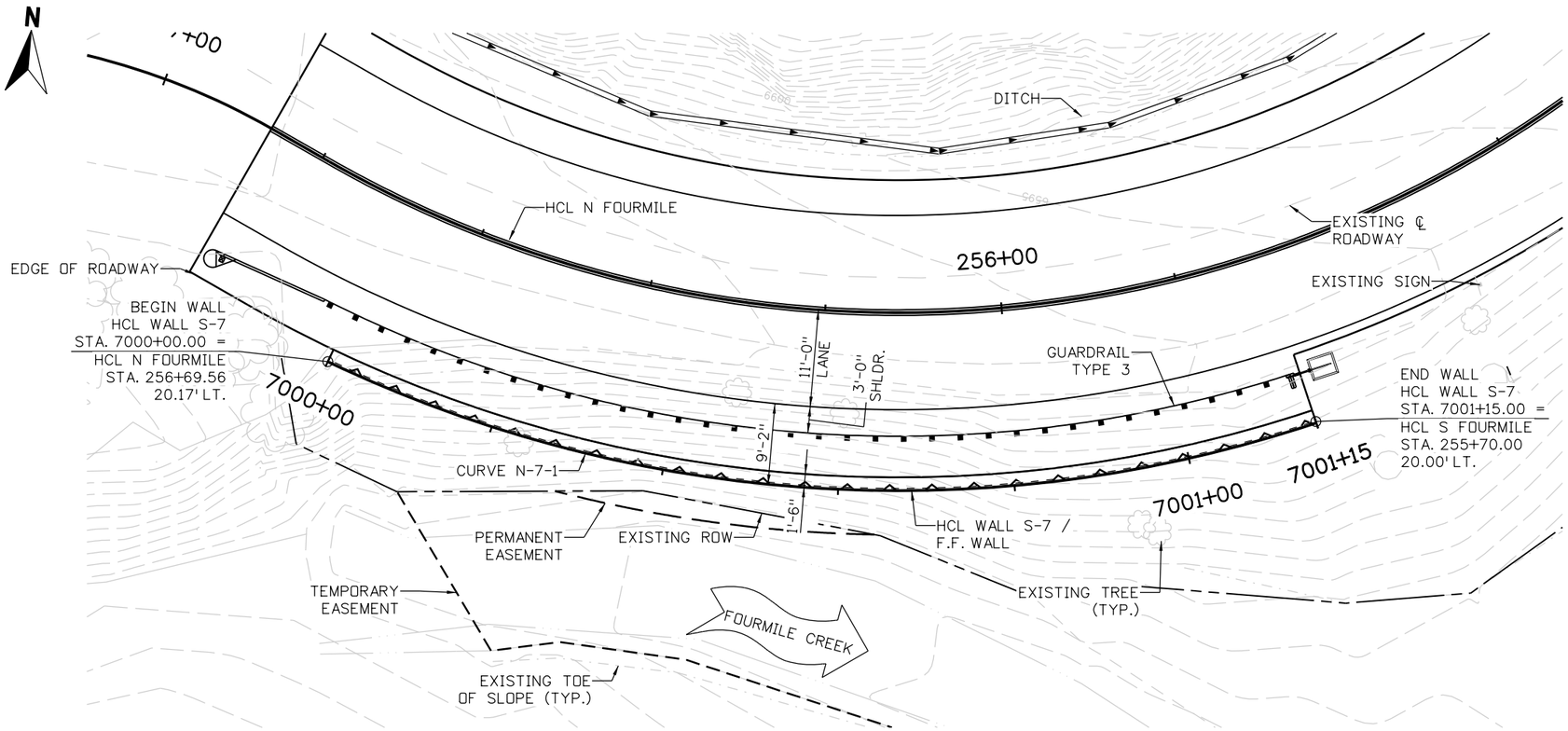

PLAN

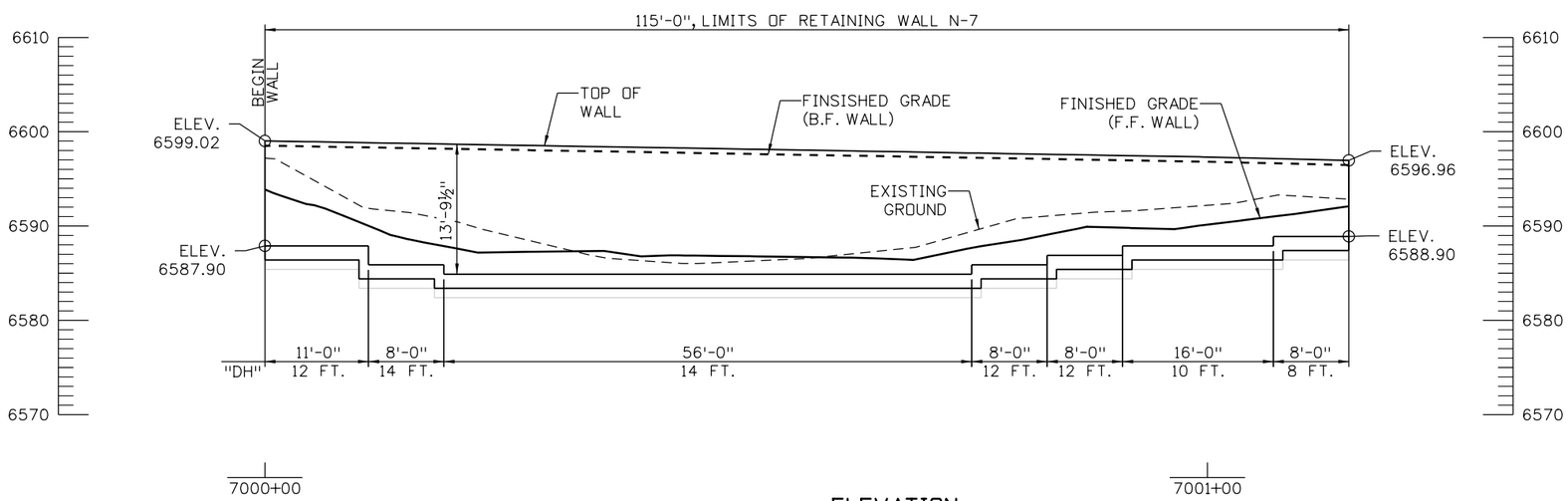

ELEVATION

TAKEN AT HCL WALL N-7 / F.F. WALL

NOTES:

1. FOR FINISHED GRADING REFER TO DRAINAGE PLANS.
2. FOR REMOVALS, UTILITY, AND GUARDRAIL INFORMATION REFER TO ROADWAY PLANS.
3. FOR ROADWAY GEOMETRICS, REFER TO ROADWAY PLANS.
4. A GEOTECHNICAL INVESTIGATION FOR A WALL AT THIS LOCATION HAS NOT BEEN COMPLETED AT THIS TIME.
5. FOR WALL TYPICAL SECTION, SEE TYPICAL SECTIONS SHEET.
6. FOR WALL HCL DATA, SEE GEOMETRIC LAYOUT SHEET.

60% SET

CALL UTILITY NOTIFICATION CENTER OF COLORADO
811
CALL 2-BUSINESS DAYS IN ADVANCE BEFORE YOU DIG, GRADE, OR EXCAVATE FOR THE MARKING OF UNDERGROUND MEMBER UTILITIES

REVISIONS: NO.	DATE	REVISION DESCRIPTION:

Boulder County

BOULDER COUNTY TRANSPORTATION DEPARTMENT
ENGINEERING DIVISION

Michael Baker INTERNATIONAL

DESIGNED:	CAD:	CHECKED:	DATE:
DLT	BMT		8/30/2016

FOURMILE CANYON DR
RETAINING WALL N-7
GENERAL LAYOUT

PROJECT NO: 4043.SEPT12C36 | SHEET NO: 159

brett.terrell 5:00:26 PM 8/30/2016 pw:\\DCPWAPP1.bkr.mbakercorp.com:pwprod\Documents\Projects\Lakewood_Office\Boulder_County_Emergency_Transportation\T03\08_Sheet_Files\06_Structures\DGN\138067_Wall_18.dgn

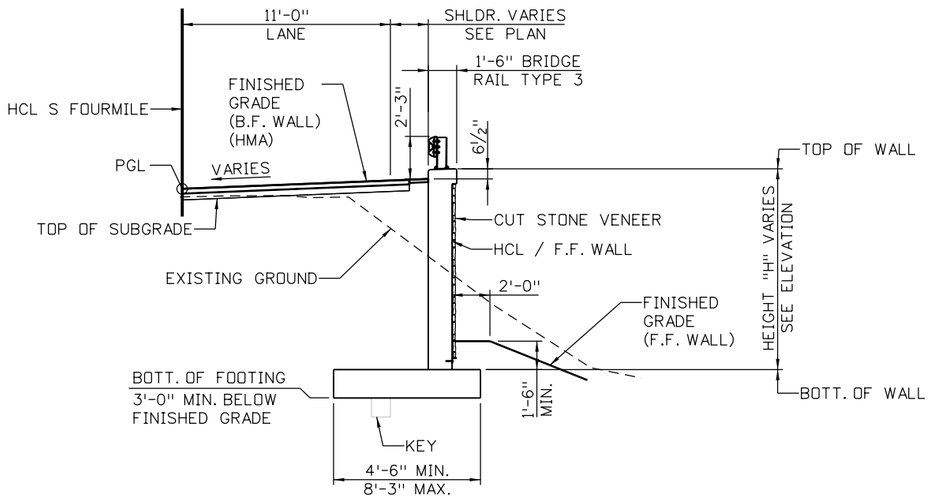

WALL WITH BRIDGE RAIL TYPICAL SECTION

WALLS S-1, S-2, S-3, N-1

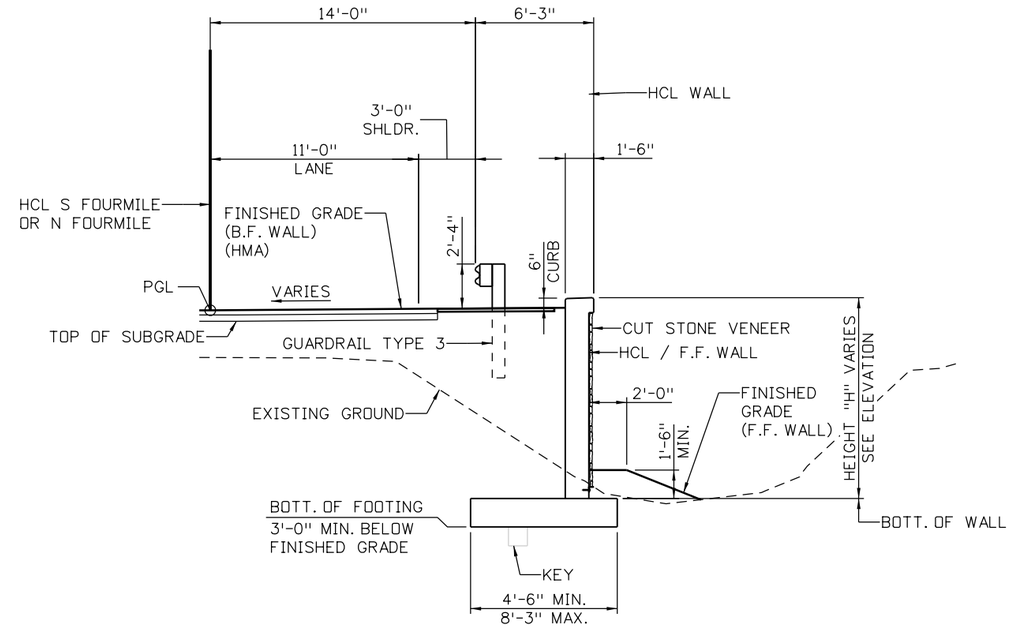

WALL WITHOUT BRIDGE RAIL TYPICAL SECTION

WALLS S-4, S-5, N-2, N-3, N-4, N-5, N-6, N-7

NOTES:

1. SEE WALL GENERAL LAYOUT SHEETS FOR PLAN AND ELEVATION VIEWS.
2. SEE DRAINAGE PLANS FOR FINISHED GRADING.
3. SEE ROADWAY PLANS FOR ROADWAY ALIGNMENT, PROFILE AND SUPERELEVATION INFORMATION.

60% SET

CALL UTILITY NOTIFICATION CENTER OF COLORADO
811
CALL 2-BUSINESS DAYS IN ADVANCE BEFORE YOU DIG, GRADE, OR EXCAVATE FOR THE MARKING OF UNDERGROUND MEMBER UTILITIES

REVISIONS: NO.	DATE	REVISION DESCRIPTION:

Boulder County

Michael Baker INTERNATIONAL

BOULDER COUNTY TRANSPORTATION DEPARTMENT
ENGINEERING DIVISION

DESIGNED:	CAD:	CHECKED:	DATE:
DLT	BMT		8/30/2016

FOURMILE CANYON DR
RETAINING WALL TYPICAL SECTIONS

PROJECT NO: 4043.SEPT12C36 | SHEET NO: 160

brett.terrell 5:00:44 PM 8/30/2016 pw:\\DCPWAPP1.bkr.mbakercorp.com:pwprod\Documents\Projects\Lakewood_Office\Boulder_County_Emergency_Transportation\T03\08_Sheet_Files\06_Structures\DGN\138067_Wall_19.dgn

CONSTRUCTION PHASING AND TRAFFIC CONTROL GENERAL NOTES

1. THIS IS THE PHASING PLAN TO BE BID. THE CONSTRAINTS OF THE PROJECT, THE BID ITEMS AND THEIR QUANTITIES REFLECT UTILIZATION OF THIS PHASING. THE CONTRACTOR MAY SUBMIT AN ALTERNATE PHASING PLAN FOR APPROVAL BY THE ENGINEER AFTER AWARD OF THE PROJECT.

2. THE SUGGESTED CONSTRUCTION PHASING PLANS ARE INTENDED TO BE A GUIDE AND SUGGESTION FOR THE CONTRACTOR TO FOLLOW. THEY ARE NOT ALL INCLUSIVE AND MAY NOT REPRESENT ALL OF THE WORK ACTIVITY REQUIRED TO CONSTRUCT THE PROPOSED IMPROVEMENTS. LAYOUT SHOWN IN THE SUGGESTED CONSTRUCTION PHASING PLANS FOLLOWS TRAFFIC CONTROL DESIGN CRITERIA AS INDICATED ON THIS SHEET.

3. IT IS THE INTENT OF THE SUGGESTED CONSTRUCTION PHASING PLANS TO CONVEY TO THE CONTRACTOR THE GENERAL, BUT ESSENTIAL, DESIGN ELEMENTS REQUIRED TO CONSTRUCT THE PROJECT. OTHER MINI-PHASES (NOT INDICATED IN THE PLANS) USING TEMPORARY LANE CLOSURES MAY BE NECESSARY TO CONSTRUCT THE PROPOSED IMPROVEMENTS. THE CONTRACTOR SHALL SUBMIT TO BOULDER COUNTY FOR REVIEW AND APPROVAL, A METHOD OF HANDLING TRAFFIC (MHT) CONFORMING TO CDOT'S STANDARD SPECIFICATIONS FOR ROAD AND BRIDGE CONSTRUCTION AND M&S STANDARDS TWO WEEKS PRIOR TO RELATED CONSTRUCTION ACTIVITY.

4. ALL CONSTRUCTION TRAFFIC CONTROL SHALL CONFORM TO THE APPLICABLE STANDARDS IN THE MANUAL ON UNIFORM TRAFFIC CONTROL DEVICES, THE COLORADO DEPARTMENT OF TRANSPORTATION STANDARD SPECIFICATIONS FOR ROAD AND BRIDGE CONSTRUCTION (AS REVISED) AND COLORADO DEPARTMENT OF TRANSPORTATION STANDARD PLANS M&S STANDARDS. TRAFFIC CONTROL DEVICES SHALL BE PLACED IN ACCORDANCE WITH CDOT M&S STANDARD PLAN S-630-1 AND THE MANUAL ON UNIFORM TRAFFIC CONTROL DEVICES.

5. APPROPRIATE ADVANCE WARNING SIGNS SHALL BE PLACED AS NEEDED. THESE SHALL BE SHOWN IN THE MHT TO BE APPROVED BY BOULDER COUNTY.

6. THE NUMBER AND TYPE OF LANES SHOWN IN THE SUGGESTED CONSTRUCTION PHASING PLANS SHALL BE MAINTAINED AT ALL TIMES AND SHOWN IN THE CONTRACTOR'S MHT, UNLESS OTHERWISE APPROVED BY THE ENGINEER.

7. A MINIMUM TRAVEL LANE WIDTH OF 10 FEET SHALL BE MAINTAINED AT ALL TIMES UNLESS APPROVED BY THE ENGINEER.

8. A MINIMUM SHOULDER WIDTH OF 1 FOOT SHALL BE PROVIDED BETWEEN THE CHANNELIZING DEVICE OR CONCRETE BARRIER AND EDGE OF TRAVEL LANE AT ALL TIMES.

9. MAXIMUM SLOPE ADJACENT TO TRAVELED WAY SHALL BE 3:1 UNLESS PROTECTED BY CONCRETE BARRIER (TEMPORARY). CONCRETE BARRIER (TEMPORARY) SHALL BE USED ADJACENT TO TRAVEL LANES WITH DROP-OFFS GREATER THAN 3 FEET.

10. IF THE END OF CONCRETE BARRIER (TEMPORARY) IS WITHIN CLEAR ZONE, IT SHALL BE SHIELDED BY EXISTING GUARDRAIL, PROTECTED BY AN IMPACT ATTENUATOR (TEMPORARY) OR TAPERED TO OUTSIDE OF CLEAR ZONE PER THE AASHTO ROADSIDE DESIGN GUIDE.

11. CONCRETE BARRIER (TEMPORARY) MAY REQUIRE MULTIPLE RESETS FOR THE DURATION OF THE PROJECT. MULTIPLE RESETS WILL NOT BE PAID FOR SEPARATELY. SEE SPECIFICATION 630. CONCRETE BARRIER (TEMPORARY) WILL BE PAID ONLY ONCE.

12. TEMPORARY PAVEMENT MARKINGS WILL NOT BE ALLOWED ON FINAL PAVEMENT SURFACES. CHANNELIZING DEVICES SHALL BE USED TO DELINEATE TEMPORARY LANES THROUGH THE CONSTRUCTION ZONE ON FINAL PAVEMENT.

13. REMOVAL OF PAVEMENT MARKINGS FOR TEMPORARY LANES WILL NOT BE PAID FOR SEPARATELY BUT SHALL BE INCLUDED IN THE COST OF THE WORK. PAINT REMOVALS MUST BE DISPOSED OF PROPERLY OFF SITE.

14. THE CONTRACTOR SHALL BEAR ALL RESPONSIBILITY AND EXPENSE FOR PROVIDING TEMPORARY DITCHES AND PIPES TO ENSURE ADEQUATE DRAINAGE AND SAFE DRIVING CONDITIONS AT ALL TIMES. STORM WATER SHALL NOT BE DIRECTED ONTO THE ROADWAY OR PRIVATE PROPERTY. CONCRETE BARRIER (TEMPORARY) SHALL HAVE DRAINAGE SLOTS, WHERE NEEDED TO PROVIDE DRAINAGE. THIS WORK WILL NOT BE PAID FOR SEPARATELY BUT SHALL BE INCLUDED IN THE COST OF THE RELATED WORK.

15. THE CONTRACTOR SHALL DESIGNATE AN INDIVIDUAL, OTHER THAN THE SUPERINTENDENT, TO BE THE TRAFFIC CONTROL SUPERVISOR (TCS) FOR THE DURATION OF THE PROJECT. ONLY ONE DESIGNATED ALTERNATE WILL BE ALLOWED FOR THIS DURATION. MULTIPLE TCS WILL NOT BE ALLOWED FOR THIS PROJECT.

16. THE CONTRACTOR SHALL MAINTAIN SAFE AND REASONABLE ACCESS TO PRIVATE PROPERTIES AT ALL TIMES, UNLESS OTHERWISE APPROVED IN WRITING BY BOTH THE PROPERTY OWNER AND BOULDER COUNTY. FULL ROADWAY CLOSURES SHALL BE PRE-APPROVED BY BOULDER COUNTY AND ADVANCE NOTIFICATION GIVEN TO THE PUBLIC SHALL FOLLOW BOULDER COUNTY STANDARDS AND CRITERIA.

17. RESET MAILBOX STRUCTURE MAY REQUIRE MULTIPLE RESETS FOR THE DURATION OF THE PROJECT. MULTIPLE RESETS WILL NOT BE PAID FOR SEPARATELY. MAILBOXES SHALL BE TEMPORARILY RELOCATED ADJACENT TO THE TRAVEL LANES AND SHALL NOT BE LOCATED WITHIN THE WORK AREA. RELOCATION OF MAILBOXES DURING CONSTRUCTION MAY REQUIRE COORDINATION WITH THE POSTAL SERVICE.

18. THE CONTRACTOR SHALL BE RESPONSIBLE FOR SNOW REMOVAL AND PAVEMENT MAINTENANCE (SWEEPING, PATCHING, ETC.) WITHIN THE CONSTRUCTION ZONE.

19. EXISTING SIGNS IN CONFLICT WITH THE TEMPORARY LANES SHALL BE COVERED OR RESET AS CONDITIONS PERMIT FOR EACH CONSTRUCTION PHASE AND AS DIRECTED BY BOULDER COUNTY. MASKING OF EXISTING SIGNS, INCLUDING THE COVERING MATERIALS AND FASTENING DEVICES, WILL NOT BE MEASURED AND PAID FOR SEPARATELY BUT SHALL BE INCLUDED IN THE COST OF THE WORK.

20. ALL CONSTRUCTION ACTIVITIES ARE ALLOWED BETWEEN THE HOURS OF 9AM AND 3PM. DURING THE HOURS OF NON-CONSTRUCTION ACTIVITY A MINIMUM OF ONE 10 FOOT TRAVEL LANE PLUS SHOULDERS SHALL BE MAINTAINED, OR AS APPROVED BY BOULDER COUNTY. SEE THE SPECIFICATIONS FOR ADDITIONAL REQUIREMENTS.

21. IF TEMPORARY SIGNALS ARE USED, THE CONTRACTOR SHALL PREPARE A DETAILED TEMPORARY SIGNAL PLAN FOR REVIEW AND APPROVAL PRIOR TO STARTING CONSTRUCTION. TIMING FOR TEMPORARY TRAFFIC SIGNALS SHALL BE APPROVED BY BOULDER COUNTY. TEMPORARY TRAFFIC SIGNALS SHALL BE WIRED. THE CONTRACTOR SHALL HAVE 2 SPARE TEMPORARY SIGNALS AVAILABLE AT ALL TIMES.

22. ALL STOCKPILE AND STAGING AREAS SHALL BE THE RESPONSIBILITY OF THE CONTRACTOR. USE OF PRIVATE PROPERTY SHALL BE COORDINATED WITH THE RESPECTIVE PROPERTY OWNER. STOCKPILE AND STAGING AREAS MUST COMPLY WITH ALL APPLICABLE PERMITS. BOULDER COUNTY WILL NOT BE INVOLVED WITH ANY AGREEMENTS MADE BETWEEN THE CONTRACTOR AND PROPERTY OWNERS.

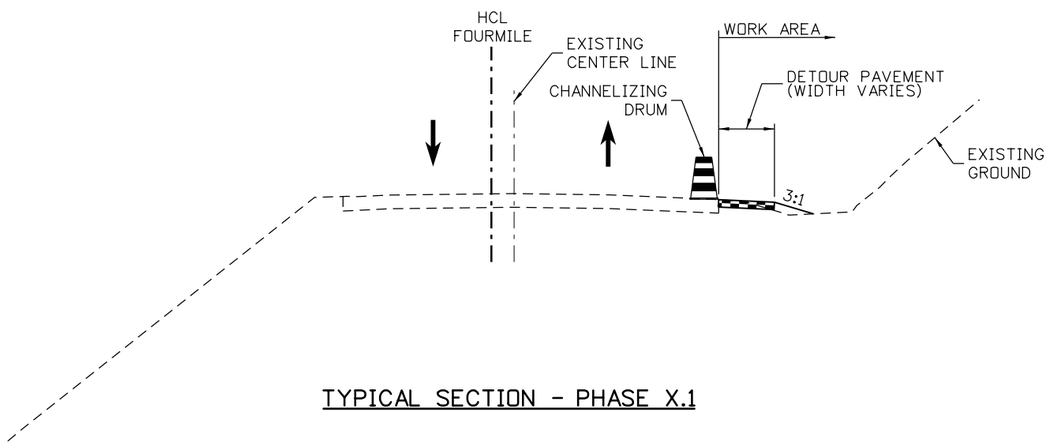

TYPICAL SECTION - PHASE X.1

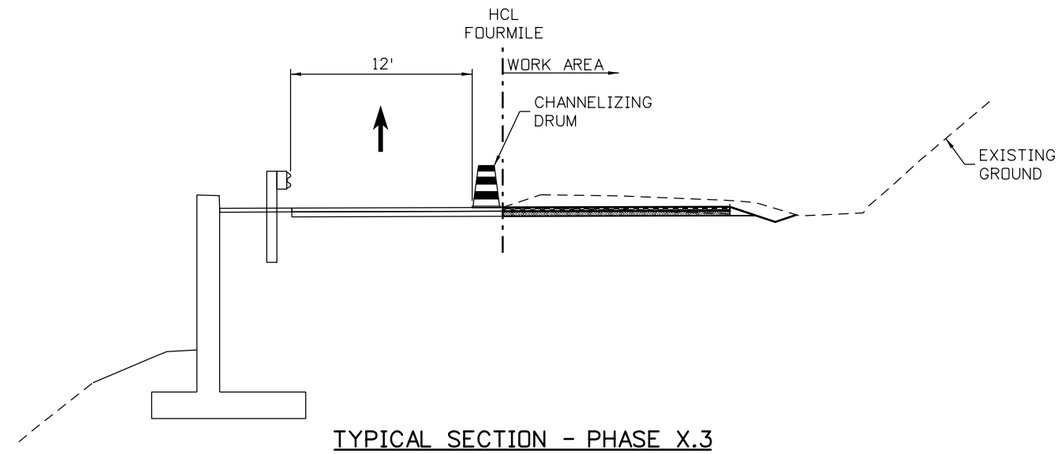

TYPICAL SECTION - PHASE X.3

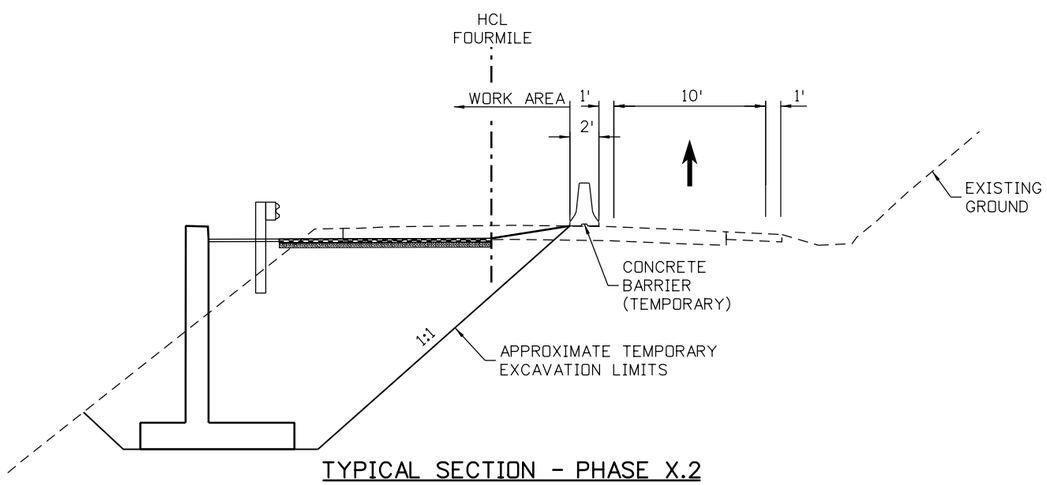

TYPICAL SECTION - PHASE X.2

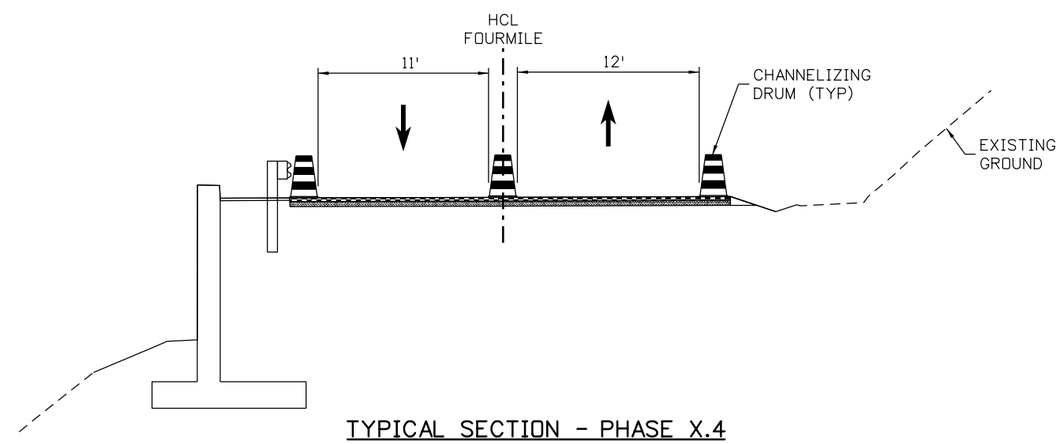

TYPICAL SECTION - PHASE X.4

60% SET

CALL UTILITY NOTIFICATION CENTER OF COLORADO
811
CALL 2-BUSINESS DAYS IN ADVANCE BEFORE YOU DIG, GRADE, OR EXCAVATE FOR THE MARKING OF UNDERGROUND MEMBER UTILITIES

REVISIONS:	NO.	DATE	REVISION DESCRIPTION:

BOULDER COUNTY TRANSPORTATION DEPARTMENT
ENGINEERING DIVISION

Boulder County

Michael Baker INTERNATIONAL

DESIGNED:	CAD:	CHECKED:	DATE:
DTW	EAV		08/30/16

FOURMILE CANYON DR
SUGGESTED CONSTRUCTION PHASING - TYPICAL SECTIONS

PROJECT NO: 4043.SEPT12C36 | SHEET NO: 162

evaughn 3:06:03 PM 8/30/2016 pw:\\DCPWAPP1.bkr.mbakercorp.com:pwprod\Documents\Projects\Lakewood_Office\Boulder_County_Emergency_Transportation\T03\08_Sheet_Files\08_Traffic\DGN\Fourmile_Phasing_TYP_Sections.dgn

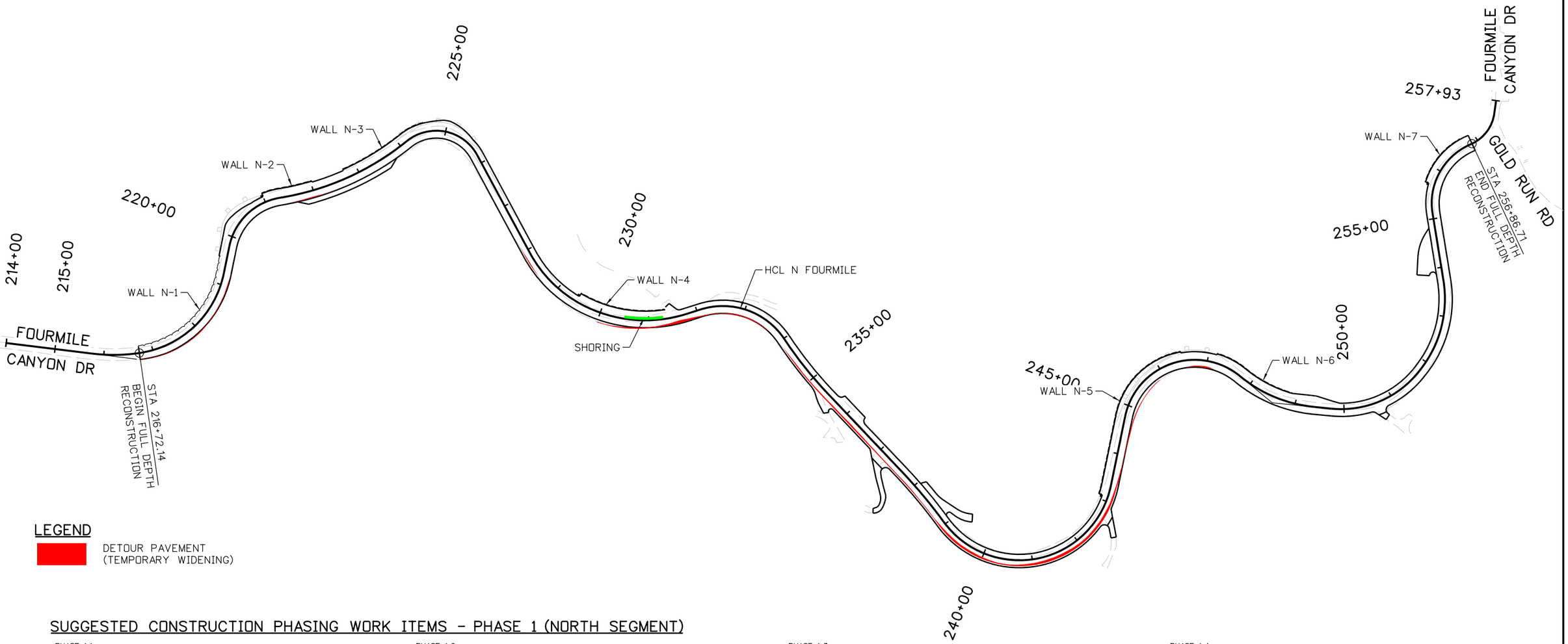

LEGEND

DETOUR PAVEMENT
(TEMPORARY WIDENING)

SUGGESTED CONSTRUCTION PHASING WORK ITEMS - PHASE 1 (NORTH SEGMENT)

PHASE 1.1:

1. TRAFFIC IN EXISTING CONFIGURATION
2. INSTALL TEMPORARY EROSION CONTROL NECESSARY FOR PHASE 1.1 WORK
3. INSTALL CONSTRUCTION TRAFFIC CONTROL NECESSARY FOR PHASE 1.1 WORK
4. UTILITY RELOCATIONS AND PROTECTIONS TO BE PERFORMED AS NECESSARY
5. CONSTRUCT DRAINAGE CROSSINGS OF ROADWAY
6. CONSTRUCT DETOUR PAVEMENT AND INSTALL TEMPORARY PAVEMENT MARKINGS
7. CLOSE ROAD TO SOUTHBOUND TRAFFIC AT SALINA JUNCTION AND DETOUR AROUND PROJECT VIA GOLD RUN ROAD AND SUNSHINE CANYON DRIVE (ASSUMES GOLD RUN ROAD CONSTRUCTION COMPLETE)
8. MOVE NORTHBOUND TRAFFIC TO TEMPORARY 1-WAY CONFIGURATION (PUSHED EAST ONTO EXISTING PAVEMENT & DETOUR PAVEMENT - SOUTHBOUND TRAFFIC REMAINS DETOURED AROUND PROJECT)

PHASE 1.2:

1. TRAFFIC IN TEMPORARY 1-WAY NORTHBOUND CONFIGURATION (ON EAST SIDE)
2. INSTALL TEMPORARY EROSION CONTROL NECESSARY FOR PHASE 1.2 WORK
3. INSTALL CONSTRUCTION TRAFFIC CONTROL NECESSARY FOR PHASE 1.2 WORK
4. UTILITY RELOCATIONS AND PROTECTIONS TO BE PERFORMED AS NECESSARY
5. CONSTRUCT ANY REMAINING DRAINAGE CROSSING ITEMS LEFT OVER FROM PHASE 1.1
6. CONSTRUCT RETAINING WALLS AND GUARDRAIL/BRIDGE RAIL
7. CONSTRUCT SOUTHBOUND ROADWAY, DRIVEWAYS AND PULLOUT WEST OF PROJECT CONTROL LINE
8. MOVE NORTHBOUND TRAFFIC TO TEMPORARY 1-WAY CONFIGURATION (PUSHED WEST ONTO NEW SOUTHBOUND PAVEMENT - SOUTHBOUND TRAFFIC REMAINS DETOURED AROUND PROJECT)

PHASE 1.3:

1. TRAFFIC IN TEMPORARY 1-WAY NORTHBOUND CONFIGURATION (ON WEST SIDE)
2. INSTALL TEMPORARY EROSION CONTROL NECESSARY FOR PHASE 1.3 WORK
3. INSTALL CONSTRUCTION TRAFFIC CONTROL NECESSARY FOR PHASE 1.3 WORK
4. UTILITY RELOCATIONS AND PROTECTIONS TO BE PERFORMED AS NECESSARY
5. CONSTRUCT ANY REMAINING DRAINAGE CROSSING ITEMS LEFT OVER FROM PHASES 1.1 OR 1.2
6. CONSTRUCT NORTHBOUND ROADWAY, DRIVEWAYS AND PULLOUT EAST OF PROJECT CONTROL LINE
7. MOVE 1-WAY NORTHBOUND TRAFFIC TO FINAL NORTHBOUND CONFIGURATION
8. REMOVE SOUTHBOUND DETOUR
9. MOVE SOUTHBOUND TRAFFIC TO FINAL SOUTHBOUND CONFIGURATION

PHASE 1.4:

1. TRAFFIC IN FINAL CONFIGURATION WITH CONSTRUCTION TRAFFIC CONTROL
2. REMOVE TEMPORARY EROSION CONTROL
3. INSTALL PERMANENT EROSION CONTROL
4. INSTALL FINAL SIGNAGE
5. INSTALL FINAL PAVEMENT MARKINGS
6. REMOVE CONSTRUCTION TRAFFIC CONTROL DEVICES
7. CLEAN-UP AND DEMOBILIZE

N

100 0 100 200 FT
HORIZONTAL SCALE: 1"=200'

60% SET

CALL UTILITY NOTIFICATION CENTER OF COLORADO
811
CALL 2-BUSINESS DAYS IN ADVANCE BEFORE YOU DIG, GRADE, OR EXCAVATE FOR THE MARKING OF UNDERGROUND MEMBER UTILITIES

REVISIONS:	NO.	DATE	REVISION DESCRIPTION:

Boulder County

BOULDER COUNTY TRANSPORTATION DEPARTMENT
ENGINEERING DIVISION

Michael Baker INTERNATIONAL

DESIGNED:	CAD:	CHECKED:	DATE:
DTW	EAV		08/30/16

FOURMILE CANYON DR (NORTH)
SUGGESTED CONSTRUCTION PHASING - PHASE 1

PROJECT NO: 4043.SEPT12C36 | SHEET NO: 163

evaughn 3:06:17 PM 8/30/2016 pw:\\DCPWAPP1.bkr.mbakercorp.com:pwprod\Documents\Projects\Lakewood_Office\Boulder_County_Emergency_Transportation\TO3\08_Sheet_Files\08_Traffic\DGN\North\Fourmile_N-Phasing01.dgn

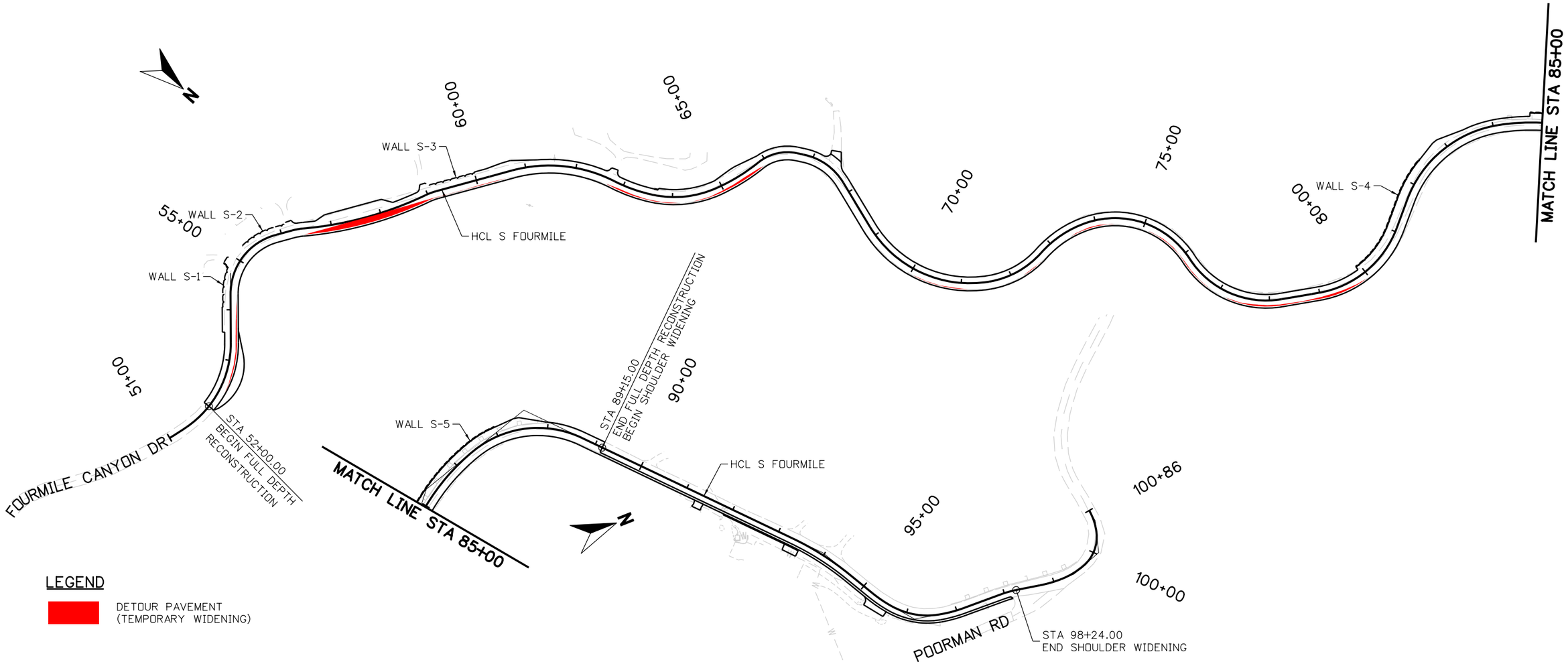

LEGEND

DETOUR PAVEMENT
(TEMPORARY WIDENING)

SUGGESTED CONSTRUCTION PHASING WORK ITEMS - PHASE 2 (SOUTH SEGMENT)

PHASE 2.1:

1. TRAFFIC IN EXISTING CONFIGURATION
2. INSTALL TEMPORARY EROSION CONTROL NECESSARY FOR PHASE 2.1 WORK
3. INSTALL CONSTRUCTION TRAFFIC CONTROL NECESSARY FOR PHASE 2.1 WORK
4. UTILITY RELOCATIONS AND PROTECTIONS TO BE PERFORMED AS NECESSARY
5. CONSTRUCT DRAINAGE CROSSINGS OF ROADWAY
6. CONSTRUCT DETOUR PAVEMENT AND INSTALL TEMPORARY PAVEMENT MARKINGS
7. CLOSE ROAD TO SOUTHBOUND TRAFFIC AT POORMAN ROAD (LOCAL SOUTHBOUND TRAFFIC ALLOWED TO STA. 90+00) AND DETOUR AROUND PROJECT VIA POORMAN ROAD AND SUNSHINE CANYON DRIVE
8. MOVE NORTHBOUND TRAFFIC TO TEMPORARY 1-WAY CONFIGURATION (PUSHED EAST ONTO EXISTING PAVEMENT & DETOUR PAVEMENT - SOUTHBOUND TRAFFIC REMAINS DETOURED AROUND PROJECT)

PHASE 2.2:

1. TRAFFIC IN TEMPORARY 1-WAY NORTHBOUND CONFIGURATION (ON EAST SIDE)
2. INSTALL TEMPORARY EROSION CONTROL NECESSARY FOR PHASE 2.2 WORK
3. INSTALL CONSTRUCTION TRAFFIC CONTROL NECESSARY FOR PHASE 2.2 WORK
4. UTILITY RELOCATIONS AND PROTECTIONS TO BE PERFORMED AS NECESSARY
5. CONSTRUCT ANY REMAINING DRAINAGE CROSSING ITEMS LEFT OVER FROM PHASE 2.1
6. CONSTRUCT RETAINING WALLS AND GUARDRAIL/BRIDGE RAIL
7. CONSTRUCT SOUTHBOUND ROADWAY AND DRIVEWAYS WEST OF PROJECT CONTROL LINE
8. MOVE NORTHBOUND TRAFFIC TO TEMPORARY 1-WAY CONFIGURATION (PUSHED WEST ONTO NEW SOUTHBOUND PAVEMENT - SOUTHBOUND TRAFFIC REMAINS DETOURED AROUND PROJECT)

PHASE 2.3:

1. TRAFFIC IN TEMPORARY 1-WAY NORTHBOUND CONFIGURATION (ON WEST SIDE)
2. INSTALL TEMPORARY EROSION CONTROL NECESSARY FOR PHASE 2.3 WORK
3. INSTALL CONSTRUCTION TRAFFIC CONTROL NECESSARY FOR PHASE 2.3 WORK
4. UTILITY RELOCATIONS AND PROTECTIONS TO BE PERFORMED AS NECESSARY
5. CONSTRUCT ANY REMAINING DRAINAGE CROSSING ITEMS LEFT OVER FROM PHASES 2.1 OR 2.2
6. CONSTRUCT NORTHBOUND ROADWAY AND PULLOUTS EAST OF PROJECT CONTROL LINE
7. CONSTRUCT SHOULDER WIDENING AND RELATED DRAINAGE TO POORMAN ROAD
8. MOVE 1-WAY NORTHBOUND TRAFFIC TO FINAL NORTHBOUND CONFIGURATION
9. REMOVE SOUTHBOUND DETOUR
10. MOVE SOUTHBOUND TRAFFIC TO FINAL SOUTHBOUND CONFIGURATION

PHASE 2.4:

1. TRAFFIC IN FINAL CONFIGURATION WITH CONSTRUCTION TRAFFIC CONTROL
2. REMOVE TEMPORARY EROSION CONTROL
3. INSTALL PERMANENT EROSION CONTROL
4. INSTALL FINAL SIGNAGE
5. INSTALL FINAL PAVEMENT MARKINGS
6. REMOVE CONSTRUCTION TRAFFIC CONTROL DEVICES
7. CLEAN-UP AND DEMOBILIZE

100 0 100 200 FT
HORIZONTAL SCALE: 1"=200'

60% SET

CALL UTILITY NOTIFICATION CENTER OF COLORADO
811
CALL 2-BUSINESS DAYS IN ADVANCE BEFORE YOU DIG, GRADE, OR EXCAVATE FOR THE MARKING OF UNDERGROUND MEMBER UTILITIES

REVISIONS:	NO.	DATE	REVISION DESCRIPTION:

Boulder County

BOULDER COUNTY TRANSPORTATION DEPARTMENT
ENGINEERING DIVISION

Michael Baker INTERNATIONAL

DESIGNED:	CAD:	CHECKED:	DATE:
DTW	EAV		08/30/16

FOURMILE CANYON DR (SOUTH)
SUGGESTED CONSTRUCTION PHASING - PHASE 2

PROJECT NO: 4043.SEPT12C36 SHEET NO: 164

evaughn 3:06:33 PM 8/30/2016 pw:\\DCPWAPP1.bkr.mbakercorp.com:pwprod\Documents\Projects\Lakewood_Office\Boulder_County_Emergency_Transportation\T03\08_Sheet_Files\08_Traffic\DGN\South\Fourmile_S-Phasing01.dgn

1. SITE DESCRIPTION

The Contractor shall comply with all CDOT contractual requirements and all requirements associated with the CDPS-SCP on this project. The SWMP Administrator shall update to reflect current project site conditions.

A. PROJECT SITE LOCATION: The Fourmile Canyon Drive South section (approximately 3600 feet long) starts a mile west of Boulder Canyon Road and extends to Poorman Road. The Fourmile North section (approximately 3,300 feet long) begins at approximately 40°02'44" N, 105°21'54" W and ends just south of Salina Junction. The proposed project limits wind between Sections 17, 21, and 28 Township 1 North, Range 71 West of the 6th Principal Meridian.

B. PROJECT SITE DESCRIPTION: The proposed construction activities would restore and improve the roadway and drainage along Fourmile Canyon Drive resulting in increase safety for vehicles and home owners in the area. Boulder County Task Order 3 project limits extend along Fourmile Canyon Drive (CR 118) from the CR 118 intersection with County Road 119 to Salina Junction. Fourmile Canyon Drive (CR 118) is approximately 5 miles in length with a paved 20 foot wide roadway section located in a narrow mountain valley characterized by residential development along Fourmile Creek. The roadway improvements will include a 27 foot wide typical section consisting of (2) 11 foot lanes with a 4 foot bike lane/uphill shoulder and a 1 foot downhill shoulder. In addition there will be several wall constructed to retain the roadway above Fourmile Creek. Roadside drainage design will be incorporated as well, conveying runoff into ditches and culverts/storm sewer systems that outfall into Fourmile Creek. Drainage project improvements will include adding, replacing and resizing the existing drainage culverts with slope protection.

C. PROPOSED SEQUENCING FOR MAJOR CONSTRUCTION ACTIVITIES: Construction of the project will come in phases, as laid out by the contractor. Sequencing for the construction of the project shall include the following steps; clearing and grubbing, retaining walls, culverts, roadway, grading and stabilization with seeding and planting native plants. All traffic phasing and planning before, during and after the completion of the project shall be coordinated with Boulder County and managed by the contractor. Activities throughout the construction will be determined by the contractor and are subject to change.

D. ACRES OF DISTURBANCE: The total area of disturbance includes areas of grading and stabilization, stockpiling of fill material, demolition, access roads, excavation, areas with heavy equipment vehicle traffic and staging areas. The sum of the areas include both segments (north and south) of Fourmile Canyon Drive.

1. Total area of construction site (LOC (PERMITTED AREA)): 12.9 acres
2. Total area of proposed disturbance (LDA): 11.6 acres
3. Total area of seeding: 5.9 acres
4. Total area of impervious surface: 5.7 acres
5. Total area of NEW impervious surface: 4.7 acres

E. EXISTING SOIL DATA: According to the Soil Survey of Boulder County, Colorado the site consists of 7 soil types. The information was collected from the USDA (http://websoilsurvey.sc.egov.usda.gov/App/WebSoilSurvey.aspx). The soil types are:

1. Juget-Rock outcrop complex
2. Typic Haplustolls-Cathedral family-Rock outcrop complex
3. Pachic Argiustolls-Aquic Argiudolls complex.

F. EXISTING VEGETATION, INCLUDING PERCENT COVER:
During design the SWMP Administrator for Design in consultation with the Engineer will determine if the SWMP Administrator for Design or the SWMP Administrator will conduct the Vegetation Transects as outlined in Chapter 4.11.2 of the Erosion Control and Stormwater Quality Guide.

Design Date of Survey: December 22, 2015 Percent of Density: 40

Description of existing vegetation: Elevations within the project area range from 6,590 ft to 7,723 ft msl. Dominant trees and shrubs within the project area includes Ponderosa pine (Pinus ponderosa), Douglas fir (Pseudotsuga menziesii), plains cottonwood (Populus deltoids), Rocky Mountain juniper (Juniperus scopulorum), aspen (Populus tremuloides), mountain alder (Alnus tenuifolia), and several species of willow (Salix sp.). Common herbaceous vegetation within the project area included downy brome (Bromus tectorum), western wheatgrass (Pascopyrum smithii), bull thistle (Cirsium vulgare), common mullein (Verbascum thapsus), yucca, smooth brome (Bromus inermis), and woods rose (Rosa woodsii). Existing vegetation makes up approximately 40% of the existing ground cover within the project area.

Pre-Construction Date of survey: _____ %Density: _____
Description of existing vegetation:
Map or table showing transect locations in SWMP notebook tab 17:

Post-Construction Date of survey: _____ %Density: _____
Description of existing vegetation: **Date of CDPS-SCP Closure:** _____
Map or table showing transect locations in SWMP notebook tab 17:

G. POTENTIAL POLLUTANTS SOURCES: See First Construction Activities under Potential Pollutant Sources. The SWMP Administrator shall prepare a list of all potential pollutants and their locations in accordance with subsection 107.25.

H. RECEIVING WATER:

1. Outfall locations:

Drainage System	Size	Type	Location	Ultimate Receiving Waters
A-S-100	24" RCP	Culvert	52+52	St. Vrain Creek
A-S-101	30" x 19" RCP	Culvert	56+46	St. Vrain Creek
A-S-104	30" x 19" RCP	Culvert	62+49	St. Vrain Creek
A-S-106	18" RCP	Culvert	66+23	St. Vrain Creek
A-S-107	30" x 19" RCP	Culvert	68+63	St. Vrain Creek
A-S-108	30" RCP	Culvert	72+30	St. Vrain Creek
A-S-110	24" RCP	Culvert	79+66	St. Vrain Creek
A-S-113	23" X 14" RCP	Culvert	90+69	St. Vrain Creek
A-N-100	42" RCP	Culvert	217+25	St. Vrain Creek
A-N-103	18" RCP	Culvert	223+86	St. Vrain Creek
A-N-104	24" RCP	Culvert	228+85	St. Vrain Creek
A-N-106	24" RCP	Culvert	232+70	St. Vrain Creek
A-N-107	48" RCP	Culvert	235+55	St. Vrain Creek
A-N-110	18" RCP	Culvert	240+57	St. Vrain Creek
A-N-111	38" X 24" RCP	Culvert	241+78	St. Vrain Creek
A-N-112	18" RCP	Culvert	242+52	St. Vrain Creek
A-N-115	8' X 5' RCBC	Box	250+48	St. Vrain Creek
A-N-116	24" RCP	Culvert	250+61	St. Vrain Creek
A-N-117	24" RCP	Culvert	252+86	St. Vrain Creek

2. Names of receiving water(s) on site: Fourmile Canyon Creek
3. Ultimate receiving water: St. Vrain Creek
4. Horizontal distance nearest water of the state is from project: approximately 21 miles

I. NON-STORMWATER DISCHARGES: Potential non-stormwater discharges for this site include potable water used for grading, dust suppression and erosion control seeding (permanent and temporary) within the entire site.

I.

ALLOWABLE:

1. Groundwater and stormwater dewatering: Discharges to the ground of water from construction dewatering activities may be authorized provided that:
   a. the source is groundwater and/or groundwater combined with stormwater that does not contain pollutants
   b. the source and BMPs/Control Measures are identified in the SWMP
   c. discharges do not leave the site as surface runoff or to surface waters
   d. The contractor shall protect all work areas and facilities from water at all times. Areas and facilities subject to flooding, regardless of the source of water, shall be promptly dewatered and restored at no cost to the owner. This shall include removal of any debris caused by flooding. Any dewatering shall be done in accordance with Subsection 107.25

CONTAMINATED:

2. If discharges do not meet the above criteria a separate CDPS permit shall be obtained by the Contractor from the CDPHE. See standard special provision 250 Hazardous Waste and Contaminated Water.

2. SITE MAP COMPONENTS:

Pre-construction

A. PROJECT CONSTRUCTION POTENTIAL SITE BOUNDARIES - See Stormwater Management Plan

B. ALL AREAS OF GROUND SURFACE DISTURBANCE - See Stormwater Management Plan

C. AREAS OF CUT AND FILL - See Stormwater Management Plan

D. LOCATION OF ALL STRUCTURAL BMPs/CONTROL MEASURES IDENTIFIED IN THE SWMP - See Stormwater Management Plan

E. LOCATION OF NON-STRUCTURAL BMPs/CONTROL MEASURES AS APPLICABLE IN THE SWMP - See Stormwater Management Plan

F. SPRINGS, STREAMS, WETLANDS AND OTHER SURFACE WATER - See Stormwater Management Plan

G. PROTECTION OF TREES, SHRUBS, CULTURAL RESOURCES AND MATURE VEGETATION - See Stormwater Management Plan

H. AREAS USED FOR STORING AND STOCKPILING OF MATERIALS, STAGING AREAS (field trailer, fueling, etc.) and BATCH PLANTS - See Stormwater Management Plan

3. SWMP ADMINISTRATOR:

A. SWMP ADMINISTRATOR FOR DESIGN:

Name/Title	Contact Information
Jo Ann Murray, P.E.	Michael Baker International (720) 479-3157 joann.murray@mbakerintl.com

B. SWMP ADMINISTRATOR FOR CONSTRUCTION: (As defined in Subsection 208) The Contractor shall designate a SWMP Administrator for Construction upon ownership of the SWMP. The SWMP Administrator shall become the owner/operator and assume responsibility for all design changes to the SWMP implementation and maintenance in accordance to 208.03. The SWMP Administrator shall be responsible for implementing, maintaining and revising SWMP, including the title and contact information. The activities and responsibilities of the SWMP administrator shall address all aspects of the projects SWMP. (Update the information below for each new SWMP Administrator) (Copy of TECS Certification must also be included in the SWMP Notebook.)

Name/Title	Contact Information	Certification #	Start Date	Engineer Approval

C. EROSION CONTROL INSPECTOR: (As defined in Subsection 208) The Contractor may designate an Erosion Control Inspector. The Erosion Control Inspector shall complete duties in accordance with subsection 208.03 (c) (Copy of TECS Certification must also be included in the SWMP Notebook.)

Name/Title	Contact Information	Certification #	Start Date	Engineer Approval

4. STORMWATER MANAGEMENT CONTROLS FIRST CONSTRUCTION ACTIVITIES

THE CONTRACTOR SHALL PERFORM THE FOLLOWING:

A. POTENTIAL POLLUTANT SOURCES

Evaluate, identify, locate and describe all potential sources of pollutants at the site in accordance with subsection 107.25, CDPS-SCP and place in the SWMP notebook. All BMPs/Control Measures related to potential pollutants shall be shown on the SWMP site map by the Contractor's SWMP Administrator.

B. OFFSITE DRAINAGE (RUN ON WATER)

1. Describe and record BMPs/Control Measures on the SWMP site map that have been implemented to address off site run-on water in accordance with subsection 208.03.

C. VEHICLE TRACKING PAD/VEHICLE TRACKING CONTROL

1. BMPs/Control Measures shall be implemented in accordance with subsection 208.04.

D. PERIMETER CONTROL

1. Perimeter control shall be established as the first item on the SWMP to prevent the potential for pollutants leaving the construction site boundaries, entering the stormwater drainage system, or discharging to state waters.
2. Perimeter control may consist of vegetation buffers, berms, silt fence, erosion logs, existing landforms, or other BMPs/Control Measures as approved.
3. Perimeter control shall be in accordance with subsection 208.04

5. DURING CONSTRUCTION

RESPONSIBILITIES OF THE SWMP ADMINISTRATOR DURING CONSTRUCTION

The SWMP should be considered a "living document" that is continuously reviewed and modified. During construction, the following items shall be added, updated, or amended as needed by the SWMP Administrator in accordance with subsection 208.

During construction, indicate how items that have not been addressed during design are being handled in construction. If items are covered in the template or other sections of the SWMP notebook indicate below what section the discussion takes place.

A. STOCKPILE MANAGEMENT: Shall be done in accordance with subsection 107.25 and 208.07

B. CONCRETE WASHOUT: Concrete wash out water or waste from field laboratories and paving equipment shall be contained in accordance with subsection 208.05.

C. SAW CUTTING: Shall be done in accordance with subsection 107.25, 208.04, 208.05

D. STREET SWEEPING: Shall be done in accordance with subsection 208.04

6. INSPECTIONS

A. Inspections shall be in accordance with subsection 208.03 (c).

7. BMP/CONTROL MEASURE MAINTENANCE

A. Maintenance shall be in accordance with subsection 208.04 (f).

8. RECORD KEEPING

A. Records shall be kept in accordance with subsection 208.03 (d).

9. INTERIM AND PERMANENT STABILIZATION

A. SEEDING PLAN

Soil preparation, soil conditioning or topsoil, seeding (native), mulching (weed free) and mulch tackifier will be required for an estimated [XXX] acres of disturbed area within the right-of-way limits which are not surfaced. The following types and rates shall be used:

Foothills Seed Mix (5,500 Feet to 7,000 Feet Elevation)

COMMON NAME	BOTANICAL NAME	Variety	LBS. PLS PER ACRE
Side Oat Grama	Bouteloua curtipendula	Vaughn	1.82
Blue Grama	Boutelous grailis	Native, Alma or Hachita	0.63
Slender Wheatgrass	Elymus trachycaulus	San Luis	4.38
Junegrass	Koeleria macrantha	Native	0.15
Western Wheatgrass	Pascopyrum smithii	Arriba	3.17
Western Wheatgrass	Pascopyrum smithii	Native	3.17
Switchgrass	Panicum virgatum	Blackwell or Nebraska 28	0.63
Little Bluestem	Schizachrium scoparium	Cimarron or Pastura	1.07
Green Needlegrass	Stipa viridula	Lodorm or Native	1.93
TOTAL			

Mountain Seed Mix (7,000 Feet and Above Elevation)

COMMON NAME	BOTANICAL NAME	Variety	LBS. PLS PER ACRE
Blue Grama	Boutelous grailis	Native, Alma or Hachita	0.84
Canada Wildrye	Elymus Canadensis	Native	3.03
Thickspike Wheatgrass	Elymus lanceolatus	Critana	5.58
Slender Wheatgrass	Elymus trachycaulus	San Luis	5.48
Junegrass	Koeleria macrantha	Native	0.15
Sandberg's Bluegrass	Poa secunda	Native	0.38
TOTAL			

B. SEEDING APPLICATION: Drill seed 0.25 inch to 0.5 inch into the soil. In small areas not accessible to a drill, hand broadcast or hydroseed at double the rate and rake 0.25 inch to 0.5 inch into the soil per subsection 212.

C. MULCHING APPLICATION: Apply a minimum of 2 tons of certified weed free hay or 2 1/2 tons of certified weed free straw per acre and in accordance with Section 213, and mechanically crimp it into the soil in combination with an organic mulch tackifier.

1. Prior to winter shutdown or the summer seeding window closure: Uncompleted slopes shall be mulched with 2 tons of mulching (weed free) per acre, mechanically crimped into the topsoil in combination with an organic mulch tackifier per subsections 208 and 213.

D. SPECIAL REQUIREMENTS:

1. Due to steep slopes (>2:1), hydroseeding will be allowed on this project for permanent stabilization. Hydroseeding rate shall be at double the seeding rate. Hydroseed shall be applied in two applications. The first application is a slurry which contains seed, organic amendment and fertilizer. The second application is a slurry of mulch and tackifier. Both slurry applications shall be applied from top of slope downward, in 50' vertical lifts, unless otherwise approved by the Engineer.

E. SOIL CONDITIONING AND FERTILIZER REQUIREMENTS: Minimum requirements for all disturbances to receive seeding (native).

Soil conditioner paid for as Item 212- Soil Conditioning (Acre)			
Biological nutrient organic based fertilizer (lbs/acre)*	Humate (lbs/acre)	Compost (cy/acre) **All areas <2:1** [1/2 inch depth]	Spray on Amendment (lbs/acre) **>2:1 slopes only**
300	200	65	3500

*Biological nutrient shall not exceed 8-8-8 (N-P-K).

Humate based material shall be in accordance to Standard Special Provision 212 and compost shall be in accordance to Standard Special Provision 212.

F. SOIL RETENTION COVERING: On slopes and ditches requiring a blanket or turf reinforcement mat (trm), the blanket/trm shall be placed in lieu of mulch and mulch tackifier and placed after seeding (native). See SWMP site map for blanket/trm locations.

G. RESEEDING OPERATIONS/CORRECTIVE STABILIZATION

Prior to partial acceptance.

1. All seeded areas shall be reviewed during the 14 day inspections by the SWMP Administrator and or Erosion Control Inspector for bare soils caused by surface or wind erosion. Bare areas caused by surface or gully erosion, blown away mulch, etc. shall be re-graded, seeded, and have the designated mulching applied as necessary, at no additional cost to the project.
2. The Contractor shall maintain seeding/mulch/tackifier/blanket/TRM, mow to control weeds or apply herbicide to control weeds in the seeded areas until Partial Acceptance of the stormwater construction work.

10. PRIOR TO PROJECT FINAL ACCEPTANCE

A. Partial Acceptance shall be in accordance with subsection 107.25 (d), 208.10 and 214.04 at the Partial Acceptance of the project, it shall be determined by the SWMP Administrator and the Engineer which temporary BMPs/Control Measures shall remain until 70% revegetation is established or which shall be removed.

B. At the end of the project, all ditch checks shall either consist of temporary erosion logs (or equivalent) or permanent rip-rap.

C. All storm drains shall be cleaned prior to the Final Acceptance of the project. Work shall be included in 202 Clean Culvert.

11. NARRATIVES:

A. ADDITIONAL BMPS/CONTROL MEASURES AND NARRATIVES:

BMP/Control Measure details and narratives not covered by the SWMP or Standard Plan M-208, M-216 shall be added to the SWMP notebook by the SWMP Administrator.

BMP Matrix:

1. M-Standards have been included along with standard BMP narratives. If a Non-Standard BMP will be used or the standard narrative does not apply, the SWMP Administrator shall write a Non-Standard BMP narrative, place an "X" in the column and complete a Non-Standard BMP Specification and Narrative for the SWMP notebook.
2. The SWMP Administrator shall place an "X" in the column In Use on Site when the BMP/Control Measure has been installed.
3. Place an "X" in the column BMP/Control Measure to be located by SWMP Administrator if the SWMP Administrator shall locate the BMP/Control Measure during construction. These BMP/Control Measures are not currently located on SWMP Plans but are anticipated to be used during construction (i.e. Vehicle Tracking Pad, Batch Plants, etc.). The SWMP Administrator shall locate these prior to or during construction and reflect on SWMP Map.
4. Place an "X" in the column Installation BMP/Control Measure Pre-Construction if the BMP/Control Measure is to be installed prior to construction activity.

STRUCTURAL BMPs/Control Measures that may be potentially used on the project for erosion and sediment control; practices may include, but are not limited to:

APPLICATION, BMP/CONTROL MEASURE	NARRATIVE	M-STANDARD/NON-STANDARD	IN USE ON SITE	BMP/CONTROL MEASURE TO BE LOCATED BY SWMP ADMINSTRATOR	INSTALLATION BMP/CONTROL MEASURE PRE-CONSTRUCTION	BMP/CONTROL MEASURE PHASING		
						FIRST/INITIAL CONSTRUCTION ACTIVITIES	INTERIM CONSTRUCTION ACTIVITIES	PERMANENT STABILIZATION
PROTECTION OF EXISTING WETLANDS *Fence (plastic) and erosion logs*	Fence (plastic) shall be placed in combination with erosion logs to prevent encroachment of construction traffic and sediment into state waters prior to start of construction disturbances. Fence (plastic) shall be placed adjacent to the wetlands; erosion logs shall be placed between the plastic fence and disturbance area. Logs shall be placed to direct flows away from or filter water running into wetlands from disturbance areas.							
PROTECTION OF EXISTING TREES/LANDSCAPING *Fence (plastic)*	Fence (plastic) shall be used in areas indicated in the plans to prevent encroachment of construction traffic and sediment for the protection of mature trees and/or existing landscaping prior to start of construction disturbances.		X		X	X	X	
CHECK DAM/DITCH CHECK *Erosion log, silt berm, silt dike, rock check dam*	Placed in ditches immediately upon completion of ditch grading to reduce velocity of runoff in ditch. For existing ditches, place prior to start of construction disturbances.	M-208						
TYPE R AND TYPE 16 INLET PROTECTION *Storm drain inlet protection (Type 1,2 and 3)*	Placed prior to construction disturbances as detailed in M-208-1, to protect existing inlets or immediately upon completion of new inlets to prevent sediment from entering the inlet throughout construction.	M-208						
CULVERT INLET/OUTLET PROTECTION *Erosion logs, aggregate bags*	Placed at mouth of culvert inlets and over top of culvert at inlet and outlet where disturbance may be occurring adjacent to pipe to prevent sediment laden water from entering pipe or drainage. Place prior to start of construction disturbances.	M-208	X		X	X	X	
TYPE C, TYPE D AND TYPE 13 PROTECTION *Erosion logs, aggregate bags, erosion bales*	Placed around inlet grate or slope and ditch paving to prevent sediment from entering inlet. Place prior to start of construction disturbances.	M-208						
STOCKPILE PROTECTION *Temporary berm, erosion logs, aggregate bags**	Placed within specified distance, in accordance with subsection 208.06, from toe to contain sediment around stockpile. *Aggregate bags are easily moved and replaced for access during the work day. Place prior to start of stock pile, increase control as stock pile increases size.	M-208	X	X	X		X	
TOE OF FILL PROTECTION *Erosion logs, temporary berm, silt fence, topsoil windrow**	Place prior to slope/embankment work to capture sediment and protect and delineate undisturbed areas. *Can be used to stockpile topsoil for salvage.	M-208	X			X	X	
PERIMETER CONTROL *Erosion logs, silt fence, temporary berm, topsoil windrow**	Placed prior to construction commencing to address potential run-on water from off site, and to divert around disturbed area. *Can be used to stockpile topsoil for salvage.	M-208	X		X	X	X	
SEDIMENT CONTROL/ SLOPE CONTROL *Silt fence, erosion logs*	Placed on the contour of a slope to contain and slow down construction runoff. Place prior to start of construction disturbances.	M-208	X		X	X	X	

TEMPORARY SEDIMENT TRAP (SWMP Administrator shall add locations to SWMP site maps)	Used to capture sediment laden runoff from disturbed areas < 5 acres during construction. Place prior to start of construction disturbances.	M-208						
PERMANENT SEDIMENT BASIN Extended detention basin or other Permanent Water Quality features	Constructed early in project, prior to storm sewer/ditches to capture storm flow as a temporary sediment trap. Outlet structure shall be modified for contaminants of construction runoff a non-standard detail is needed.							
EMBANKMENT PROTECTION OR TEMPORARY SLOPE DRAIN	Placed as a conduit or chute to drain runoff down slope and to prevent erosion of slope.	M-208						
OUTLET PROTECTION Riprap, or approved other	Material placed as energy dissipater to prevent erosion at outlet structure.		X				X	X
CONCRETE WASHOUT In-ground or fabricated	Construction control, used for waste management of concrete and concrete equipment cleaning. Place prior to start of concrete activities.	M-208	X	X		X	X	
VEHICLE TRACKING PAD	Source control, placed to prevent tracking of sediment from disturbed area to offsite surface. Place prior to start of construction disturbances.	M-208	X	X		X	X	
SWEEPING	Source control, used to remove sediment tracked onto paved surfaces and to prevent sediment from entering drainage system. Sweep daily and at the end of the construction shift as needed. Kick brooms shall not be permitted.		X			X	X	
DEWATERING (Contractor is responsible for obtaining a permit from Colorado Department of Health and Environment.)	Shall be done in such a manner to prevent potential pollutants from entering state waters.		X	X		X	X	
TEMPORARY STREAM CROSSING (SWMP Administrator shall add locations to SWMP site maps)	Constructed over stream or drainage to prevent discharge of pollutants from construction equipment into water.		X			X	X	
CLEAN WATER DIVERSION	Placed to divert clean surface or ground water around disturbance area to prevent it from mixing with construction runoff.		X	X		X	X	
OTHER								

joann.murray 7:33:15 PM 8/30/2016 pw:\\DCPWAPP1.bkr.mbakercorp.com:pwprod\Documents\Projects\Lakewood_Office\Boulder_County_Emergency_Transportation\TO3\08_Sheet_Files\11_SWMP\DGN\TO3_SWMP_txt05.dgn

60% SET

CALL UTILITY NOTIFICATION CENTER OF COLORADO
811
CALL 2-BUSINESS DAYS IN ADVANCE BEFORE YOU DIG, GRADE, OR EXCAVATE FOR THE MARKING OF UNDERGROUND MEMBER UTILITIES

REVISIONS:	NO.	DATE	REVISION DESCRIPTION:

Boulder County

BOULDER COUNTY TRANSPORTATION DEPARTMENT
ENGINEERING DIVISION

Michael Baker INTERNATIONAL

DESIGNED:	CAD:	CHECKED:	DATE:
JAM	JAM	JPZ	08/30/16

UPPER FOURMILE CANYON DRIVE
SWMP NOTES (SHEET 5 OF 7)

PROJECT NO: 4043.SEPT12C36 | SHEET NO: 169

NON-STRUCTURAL BMPs/Control Measures that may be potentially used on the project for erosion and sediment control; practices may include, but are not limited to:
Erosion control devices are used to limit the amount of soil loss on site
Sediment control devices are designed to capture sediment on the project site.
Construction controls are BMPs/Control Measures related to construction access and staging.
BMP/Control Measure locations are indicated on the SWMP site map.

APPLICATION, BMP/CONTROL MEASURE	NARRATIVE	M-STANDARD	IN USE ON SITE	BMP/CONTROL MEASURE TO BE LOCATED BY SWMP ADMINISTRATOR	INSTALLATION BMP/CONTROL MEASURE PRE-CONSTRUCTION	BMP/CONTROL MEASURE PHASING		
						FIRST/INITIAL CONSTRUCTION ACTIVITIES	INTERIM CONSTRUCTION ACTIVITIES	PERMANENT STABILIZATION
VEGETATIVE BUFFER STRIP Fence (plastic)	Filter sediment laden runoff from disturbance area. Area to be identified on SWMP prior to construction starting.							
LANDFORM (SWMP Administrator shall add locations to SWMP site maps)	Existing landforms may be used as a BMP/Control Measure if they prevent sediment from entering or leaving the disturbance area. If a landform directs flow of water to a concentrated outfall point, the outfall point shall be protected to prevent erosion. Area to be identified on SWMP prior to construction starting.							
TOPSOIL MANAGEMENT STOCKPILE/SALVAGE Windrow or stockpile	Prior to embankment work commencing, existing topsoil shall be scraped to a depth of 4 inches, and placed in stockpiles or windrows. Upon completion of slope work/final grading (less 4 inches), topsoil shall be evenly distributed over embankment to a depth of 4 inches.			X		X	X	
SURFACE ROUGHENING / GRADING TECHNIQUES Blading, Backhoe, Dozing, Combination Loader	Temporary stabilization of disturbance and to minimize wind and erosion.						X	
SEEDING (TEMPORARY)	Temporary stabilization used for over wintering of disturbance or used to control erosion for areas scheduled for future construction.						X	
BONDED FIBER MATRIX/HYDRAULIC MULCH	Not to be used in areas of concentrated flows, i.e. ditch lines. To be used in combination with surface roughening for temporary stabilization of disturbed soils, when work is temporarily halted and as approved by the Engineer. May be used as surface cover for temporary topsoil stockpiles							
MULCH/MULCH TACKIFIER	Temporary or Final Stabilization placed as a surface cover for erosion control and or seeding establishment. To be installed as temporary surface cover when work is temporarily halted and as approved by the Engineer						X	X
SPRAY-ON MULCH BLANKET (Not to be used in areas of concentrated flows, i.e. ditch lines.)	Temporary or Final Stabilization placed as a surface cover for erosion control and or seeding establishment. To be installed as temporary surface cover when work is temporarily halted and as approved by the Engineer						X	X
SEEDING PERMANENT (NATIVE)	Final Stabilization of disturbance and to reduce runoff and control erosion on disturbed areas.		X				X	X
SOIL RETENTION BLANKET (SRB)	Final Stabilization of disturbance and to reduce runoff and control erosion on disturbed areas.	M-216	X				X	X
TURF REINFORCEMENT MAT (TRM)	Final Stabilization of disturbance and to reduce runoff and control erosion on disturbed areas. Placed in channels or on slopes for erosion control, channel liner and seeding establishment.	M-216					X	X
OTHER								

12. TABULATION OF STORMWATER QUANTITIES

A. BMP/Control Measure sediment removal and disposal shall be paid for as: 208 Removal and Disposal of Sediment (Equipment) and 208 Removal and Disposal of Sediment (Labor). All other BMP/Control Measure maintenance shall be included in the cost of the BMP/Control Measure.

B. It is estimated that 100 hours of labor, blading (200 horsepower), dozing (104 horsepower), combination loader (93 horsepower) and/or backhoe (93 horsepower) may be required for miscellaneous erosion control work as directed by the Engineer. Work shall be paid for as: 203 Labor, 203 Blading, 203 Dozing, 203 Combination Loader or 203 Backhoe.

C. Establishment of seeded areas shall be paid for as: 212 Seeding (native). This shall include mowing, weed control, reseeding/mulch/tackifier.

Spec.	Pay Item	Description	Pay Unit	Initial Const.	Interim Const.	Permanent Stabilization	*Total Quantity
SSP	203-01500	Blading	Hour		20	10	30
SSP	203-01510	Backhoe	Hour		5	5	10
SSP	203-01550	Dozing	Hour		5	15	20
PSP	203-01594	Combination Loader	Hour		10	10	20
SSP	203-02330	Laborer	Hour		10	10	20
PSP	207-00205	Topsoil	CY			1435	1435
PSP	207-00210	Stockpile Topsoil	CY	1250			1250
SSP	208-00002	Erosion Log Type 1 (12 inch)	LF	300	5400		5700
SSP	208-00020	Silt Fence	LF		2950		2950
SSP	208-00045	Concrete Washout Structure	Each		5		5
SSP	208-00070	Vehicle Tracking Pad	Each		2		2
SSP	208-00106	Sweeping (Sediment Removal)	Hour		20		20
SSP	208-00107	Removal of Trash	Hour		10		10
SSP	208-00207	Erosion Control Management (ECM)	Day	5	40	15	60
SSP	208-00301	Temporary Diversion	LF		1250		1250
SSP	212-00006	Seeding (Native)	Acre			5.9	4.2
SSP	212-00009	Seeding (Temporary)	Acre		0.50		0.50
SSP	212-00032	Soil Conditioning	Acre			5.9	3.80
SSP	213-00004	Mulching (Weed Free Straw)	Acre			5.9	4.2
SSP	213-00012	Spray-on Mulch Blanket	Acre		0.70		0.70
SSP	213-00061	Mulch Tackifier	LB		3800		3800
SSP	216-00201	Soil Retention Blanket (Straw/Coconut) (Biodegradable Class 1)	SY		4800		4800
SSP	216-00301	Turf Reinforcement Mat (Class1)	SY			300	300
PSP	217-00000	Herbicide Treatment	SY		1000		1000
SSP	607-11525	Fence (Plastic)	LF		500		500

*It is anticipated that additional BMPs/Control Measures and BMP/Control Measure quantities not shown on the SWMP Site Maps shall be required on the project for unforeseen conditions and replacement of items that are beyond their useful service life, see subsection 208.03 and 208.04. **Quantities for all BMPs/Control Measures shown above are estimated, and have been increased for unforeseen conditions and normal BMP/Control Measure life expectancy.** Quantities shall be adjusted according to the conditions encountered in the field as directed and approved by the Engineer. Payment shall be for the actual work completed and material used.

13. BIOLOGIC IMPACTS

A. ENVIRONMENTAL IMPACTS:

1. Wetland Impacts: NO
2. Stream Impacts: YES
3. Threatened and Endangered Species: NO
4. If YES to any of the above items, are any permits required or additional actions needed (404, etc.)
   A 404 Permit will be required.

14. NOTES

LEGEND

- LOC — LIMITS OF CONSTRUCTION (UPDATE AS NECESSARY)
- LDA — LIMITS OF DISTURBED AREA (UPDATE AS NECESSARY)
- SF — SILT FENCE
- PF — PLASTIC FENCE
- EL — EROSION LOG
- ELC — EROSION LOG FOR CULVERT
- EL — EROSION LOG FOR DITCH
- CD — ROCK CHECK DAM
- SRB — SOIL RETENTION BLANKET
- SM — SEEDING AND MULCHING
- IP — INLET PROTECTION
- VTC — VEHICLE TRACKING PAD
- CW — CONCRETE WASHOUT STRUCTURE
- RIPRAP
- FLOW ARROW

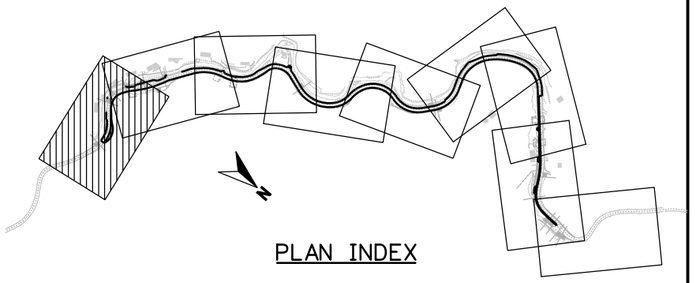

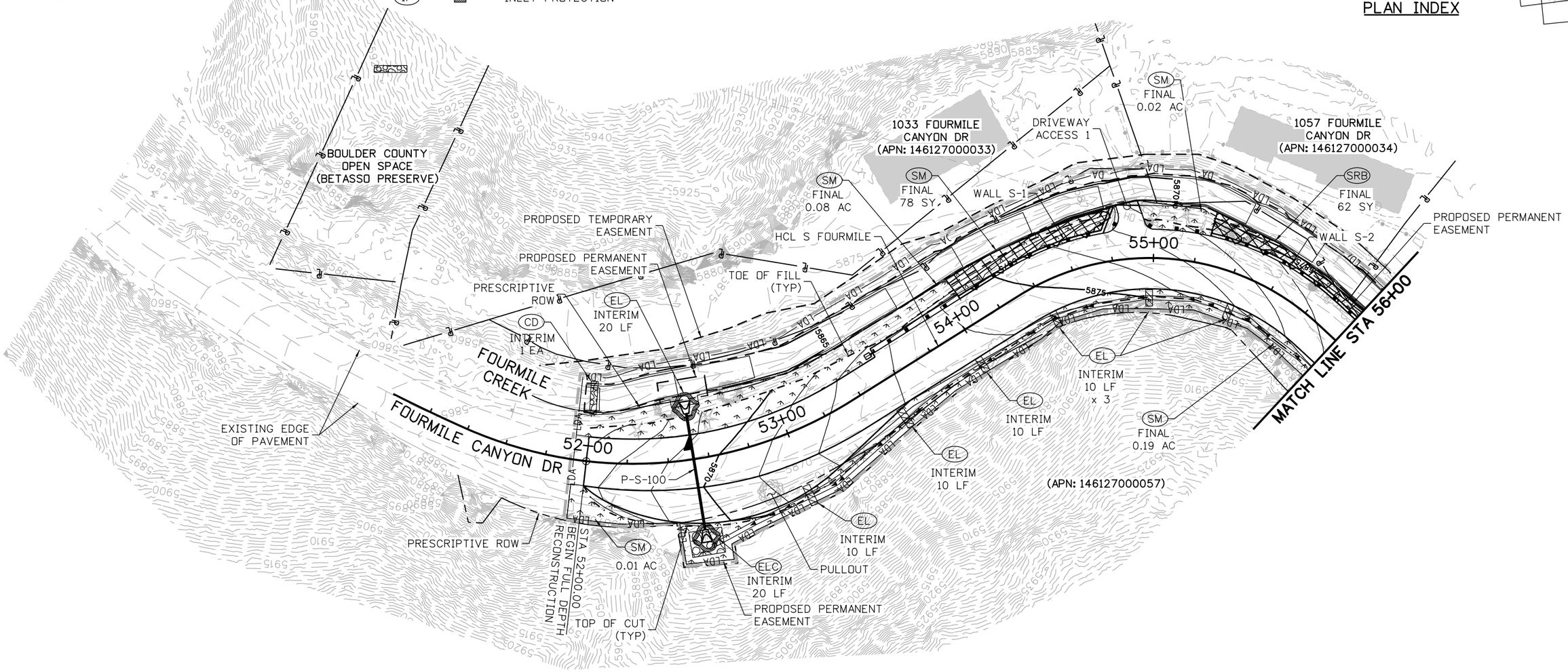

N

25 0 25 50 FT
HORIZONTAL SCALE: 1"=50'

60% SET

CALL UTILITY NOTIFICATION CENTER OF COLORADO
811
CALL 2-BUSINESS DAYS IN ADVANCE BEFORE YOU DIG, GRADE, OR EXCAVATE FOR THE MARKING OF UNDERGROUND MEMBER UTILITIES

REVISIONS: NO.	DATE	REVISION DESCRIPTION:

BOULDER COUNTY TRANSPORTATION DEPARTMENT
ENGINEERING DIVISION
Boulder County
Michael Baker INTERNATIONAL

DESIGNED:	CAD:	CHECKED:	DATE:
JAM	EAV	DTW	05/11/16

FOURMILE CANYON DR (SOUTH)
SWMP PLANS (1 OF 9)
PROJECT NO: 4043.SEPT12C36 SHEET NO: 172

jconn.murray 7:34:35 PM 8/30/2016 pw:\\DCPWAPP1.bkr.mbakercorp.com:pwprod\Documents\Projects\Lakewood_Office\Boulder_County_Emergency_Transportation\TO3\08_Sheet_Files\11_SWMP\DGN\South\Fournmile_SWMP_S-Plan01.dgn

LEGEND

- (LOC) — — — LIMITS OF CONSTRUCTION (UPDATE AS NECESSARY)
- (LDA) —LDA—LDA LIMITS OF DISTURBED AREA (UPDATE AS NECESSARY)
- (SF) —SF—SF SILT FENCE
- (PF) —PF—PF PLASTIC FENCE
- (EL) EROSION LOG
- (ELC) EROSION LOG FOR CULVERT
- (EL) EROSION LOG FOR DITCH
- (CD) ROCK CHECK DAM
- (SRB) SOIL RETENTION BLANKET
- (SM) SEEDING AND MULCHING
- (IP) INLET PROTECTION
- (VTC) VEHICLE TRACKING PAD
- (CW) CONCRETE WASHOUT STRUCTURE
- RIPRAP
- FLOW ARROW

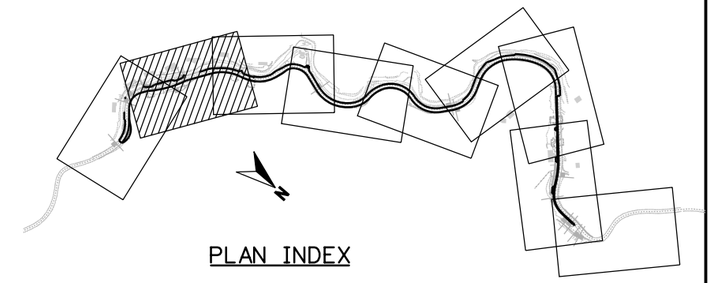

PLAN INDEX

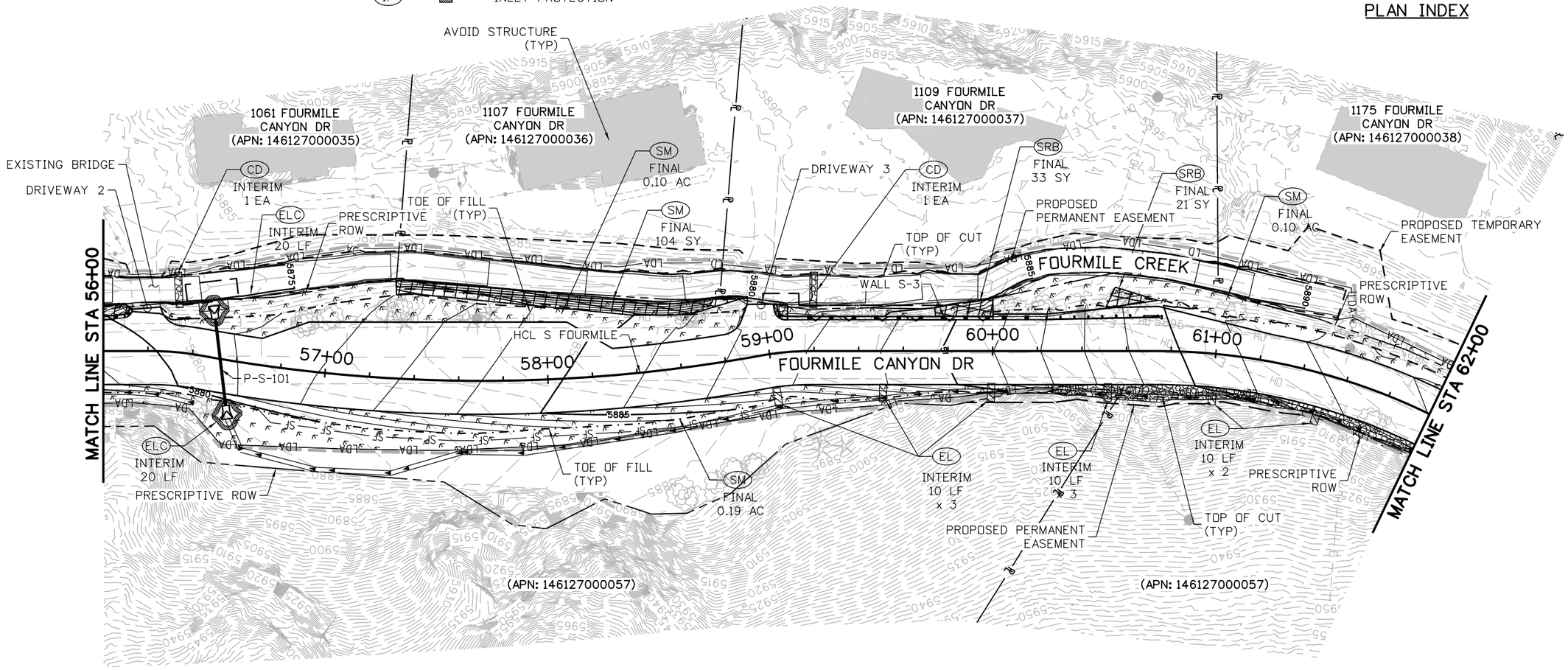

N

25 0 25 50 FT
HORIZONTAL SCALE: 1"=50'

60% SET

CALL UTILITY NOTIFICATION CENTER OF COLORADO
811
CALL 2-BUSINESS DAYS IN ADVANCE BEFORE YOU DIG, GRADE, OR EXCAVATE FOR THE MARKING OF UNDERGROUND MEMBER UTILITIES

REVISIONS:	NO.	DATE	REVISION DESCRIPTION:

BOULDER COUNTY TRANSPORTATION DEPARTMENT
ENGINEERING DIVISION
Michael Baker INTERNATIONAL

DESIGNED:	CAD:	CHECKED:	DATE:
JAM	EAV	DTW	05/11/16

FOURMILE CANYON DR (SOUTH)
SWMP PLANS (2 OF 9)

PROJECT NO: 4043.SEPT12C36 | SHEET NO: 173

joann.murray 7:34:57 PM 8/30/2016 pw:\\DCPWAPP1.bkr.mbakercorp.com:pwprod\Documents\Projects\Lakewood_Office\Boulder_County_Emergency_Transportation\TO3\08_Sheet_Files\11_SWMP\DGN\South\Fourmile_SWMP_S-Plan02.dgn

LEGEND

- LOC — LIMITS OF CONSTRUCTION (UPDATE AS NECESSARY)
- LDA — LDA — LDA — LIMITS OF DISTURBED AREA (UPDATE AS NECESSARY)
- SF — SF — SF — SILT FENCE
- PF — PF — PF — PLASTIC FENCE
- EL — EROSION LOG
- ELC — EROSION LOG FOR CULVERT
- EL — EROSION LOG FOR DITCH
- CD — ROCK CHECK DAM
- SRB — SOIL RETENTION BLANKET
- SM — SEEDING AND MULCHING
- IP — INLET PROTECTION
- VTC — VEHICLE TRACKING PAD
- CW — CONCRETE WASHOUT STRUCTURE
- RIPRAP
- FLOW ARROW

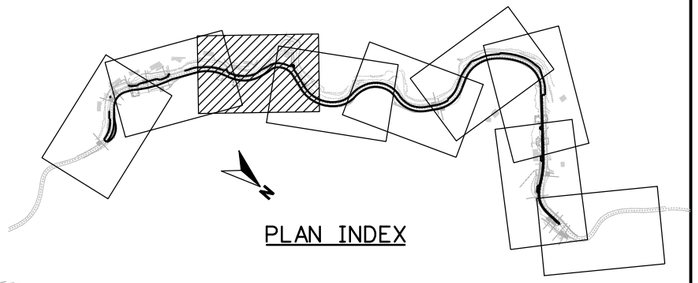

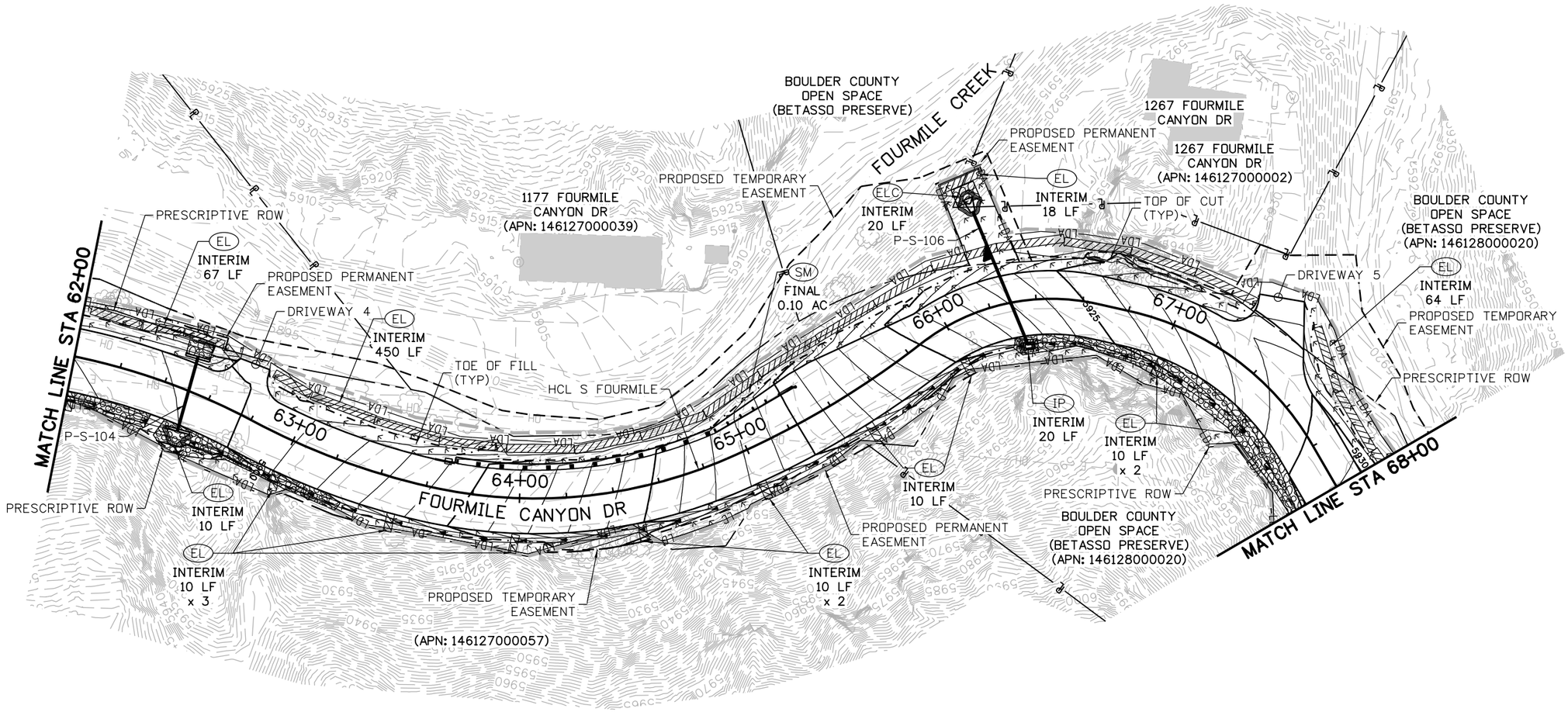

25 0 25 50 FT
HORIZONTAL SCALE: 1"=50'

60% SET

CALL UTILITY NOTIFICATION CENTER OF COLORADO
811
CALL 2-BUSINESS DAYS IN ADVANCE BEFORE YOU DIG, GRADE, OR EXCAVATE FOR THE MARKING OF UNDERGROUND MEMBER UTILITIES

REVISIONS: NO.	DATE	REVISION DESCRIPTION:

Boulder County

BOULDER COUNTY TRANSPORTATION DEPARTMENT
ENGINEERING DIVISION

Michael Baker INTERNATIONAL

DESIGNED:	CAD:	CHECKED:	DATE:
JAM	EAV	DTW	05/11/16

FOURMILE CANYON DR (SOUTH)
SWMP PLANS (3 OF 9)

PROJECT NO: 4043.SEPT12C36 | SHEET NO: 174

joann.murray 7:35:16 PM 8/30/2016 pw:\\DCPWAPP1.bkr.mbakercorp.com:pwprod\Documents\Projects\Lakewood_Office\Boulder_County_Emergency_Transportation\T03\08_Sheet_Files\11_SWMP\DGN\South\Fourmile_SWMP_S-Plan03.dgn

LEGEND

LOC	LIMITS OF CONSTRUCTION (UPDATE AS NECESSARY)
LDA — LDA — LDA	LIMITS OF DISTURBED AREA (UPDATE AS NECESSARY)
SF — SF — SF	SILT FENCE
PF — PF — PF	PLASTIC FENCE
EL	EROSION LOG
ELC	EROSION LOG FOR CULVERT
EL	EROSION LOG FOR DITCH
CD	ROCK CHECK DAM
SRB	SOIL RETENTION BLANKET
SM	SEEDING AND MULCHING
IP	INLET PROTECTION
VTC	VEHICLE TRACKING PAD
CW	CONCRETE WASHOUT STRUCTURE
	RIPRAP
	FLOW ARROW

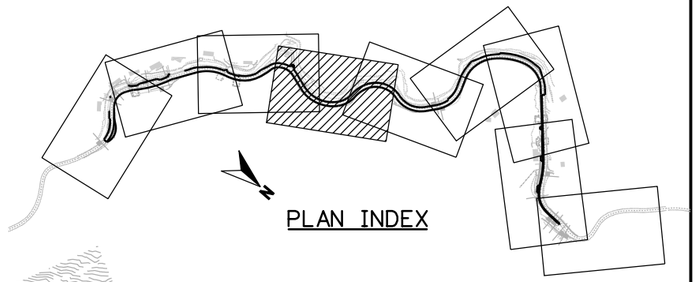

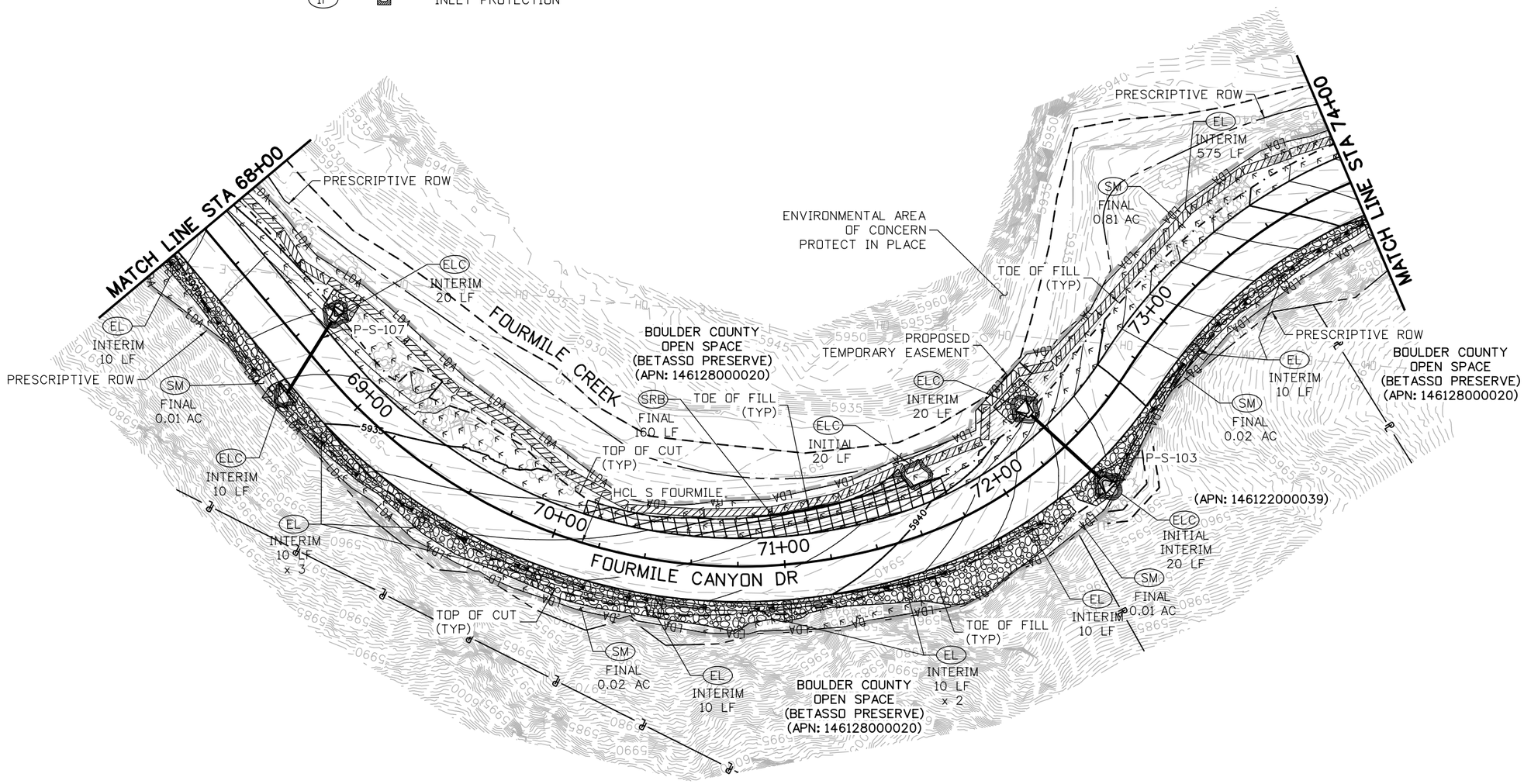

25 0 25 50 FT
HORIZONTAL SCALE: 1"=50'

60% SET

CALL UTILITY NOTIFICATION CENTER OF COLORADO
811
CALL 2-BUSINESS DAYS IN ADVANCE BEFORE YOU DIG, GRADE, OR EXCAVATE FOR THE MARKING OF UNDERGROUND MEMBER UTILITIES

REVISIONS: NO.	DATE	REVISION DESCRIPTION:

Boulder County

BOULDER COUNTY TRANSPORTATION DEPARTMENT
ENGINEERING DIVISION

Michael Baker INTERNATIONAL

DESIGNED:	CAD:	CHECKED:	DATE:
JAM	EAV	DTW	05/11/16

FOURMILE CANYON DR (SOUTH)
SWMP PLANS
(4 OF 9)

PROJECT NO: 4043.SEPT12C36 | SHEET NO: 175

joann.murray 7:35:35 PM 8/30/2016 pw:\\DCPWAPP1.bkr.mbakercorp.com:pwprod\Documents\Projects\Lakewood_Office\Boulder_County_Emergency_Transportation\TO3\08_Sheet_Files\11_SWMP\DGN\South\Fournile_SWMP_S-Plan04.dgn

LEGEND

LOC	LIMITS OF CONSTRUCTION (UPDATE AS NECESSARY)
LDA — LDA — LDA	LIMITS OF DISTURBED AREA (UPDATE AS NECESSARY)
SF — SF — SF	SILT FENCE
PF — PF — PF	PLASTIC FENCE
EL	EROSION LOG
ELC	EROSION LOG FOR CULVERT
EL	EROSION LOG FOR DITCH
CD	ROCK CHECK DAM
SRB	SOIL RETENTION BLANKET
SM	SEEDING AND MULCHING
IP	INLET PROTECTION
VTC	VEHICLE TRACKING PAD
CW	CONCRETE WASHOUT STRUCTURE
	RIPRAP
	FLOW ARROW

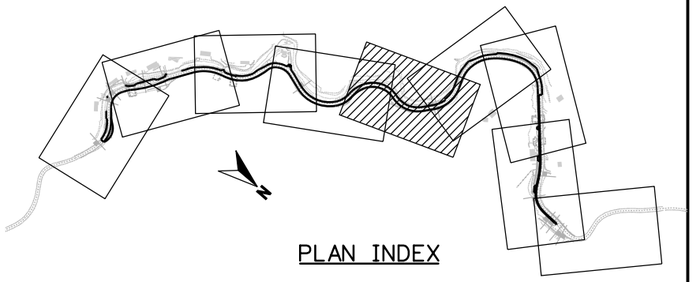

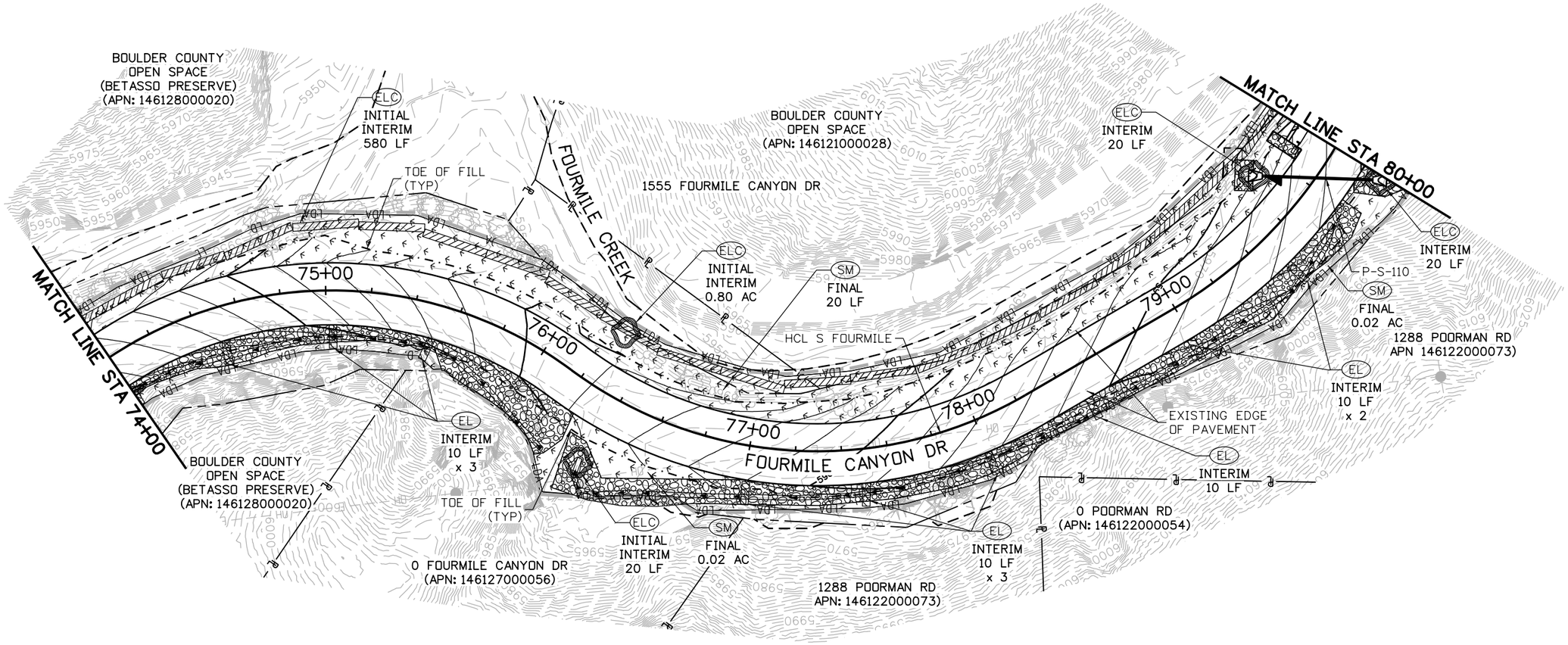

25 0 25 50 FT
HORIZONTAL SCALE: 1"=50'

60% SET

CALL UTILITY NOTIFICATION CENTER OF COLORADO
811
CALL 2-BUSINESS DAYS IN ADVANCE BEFORE YOU DIG, GRADE, OR EXCAVATE FOR THE MARKING OF UNDERGROUND MEMBER UTILITIES

REVISIONS:	NO.	DATE	REVISION DESCRIPTION:

Boulder County
BOULDER COUNTY TRANSPORTATION DEPARTMENT
ENGINEERING DIVISION
Michael Baker INTERNATIONAL

DESIGNED:	CAD:	CHECKED:	DATE:
JAM	EAV	DTW	05/11/16

FOURMILE CANYON DR (SOUTH)
SWMP PLANS
(5 OF 9)

PROJECT NO: 4043.SEPT12C36 | SHEET NO: 176

joann.murray 7:35:54 PM 8/30/2016 pw:\\DCPWAPP1.bkr.mbakercorp.com:pwprod\Documents\Projects\Lakewood_Office\Boulder_County_Emergency_Transportation\TO3\08_Sheet_Files\11_SWMP\DGN\South\Fourmile_SWMP_S-Plan05.dgn

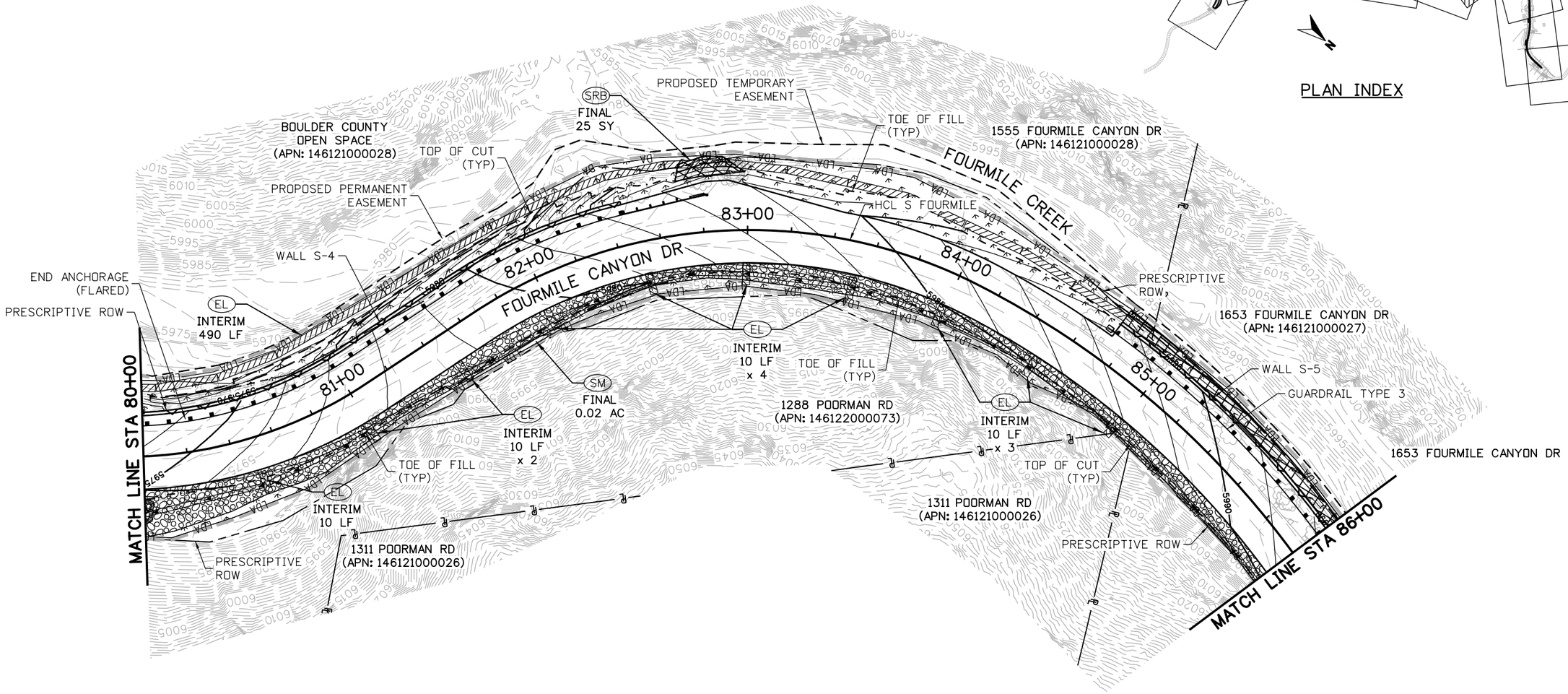

LEGEND

LOC	— — —	LIMITS OF CONSTRUCTION (UPDATE AS NECESSARY)
LDA	—LDA—LDA	LIMITS OF DISTURBED AREA (UPDATE AS NECESSARY)
SF	—SF——SF	SILT FENCE
PF	—PF——PF	PLASTIC FENCE
EL		EROSION LOG
ELC		EROSION LOG FOR CULVERT
EL		EROSION LOG FOR DITCH
CD		ROCK CHECK DAM
SRB		SOIL RETENTION BLANKET
SM		SEEDING AND MULCHING
IP		INLET PROTECTION
VTC		VEHICLE TRACKING PAD
CW		CONCRETE WASHOUT STRUCTURE
		RIPRAP
		FLOW ARROW

25 0 25 50 FT
HORIZONTAL SCALE: 1"=50'

60% SET

CALL UTILITY NOTIFICATION CENTER OF COLORADO
811
CALL 2-BUSINESS DAYS IN ADVANCE BEFORE YOU DIG, GRADE, OR EXCAVATE FOR THE MARKING OF UNDERGROUND MEMBER UTILITIES

REVISIONS:	NO.	DATE	REVISION DESCRIPTION:

Boulder County

BOULDER COUNTY TRANSPORTATION DEPARTMENT
ENGINEERING DIVISION

Michael Baker INTERNATIONAL

DESIGNED:	CAD:	CHECKED:	DATE:
JAM	EAV	DTW	05/11/16

FOURMILE CANYON DR (SOUTH)
SWMP PLANS
(6 OF 9)

PROJECT NO: 4043.SEPT12C36 | SHEET NO: 177

jpann.murray 7:36:14 PM 8/30/2016 pw:\\DCPWAPP1.bkr.mbakercorp.com:pwprod\Documents\Projects\Lakewood_Office\Boulder_County_Emergency_Transportation\T03\08_Sheet_Files\1L_SWMP\DGN\South\Fourmile_SWMP_S-Plan06.dgn

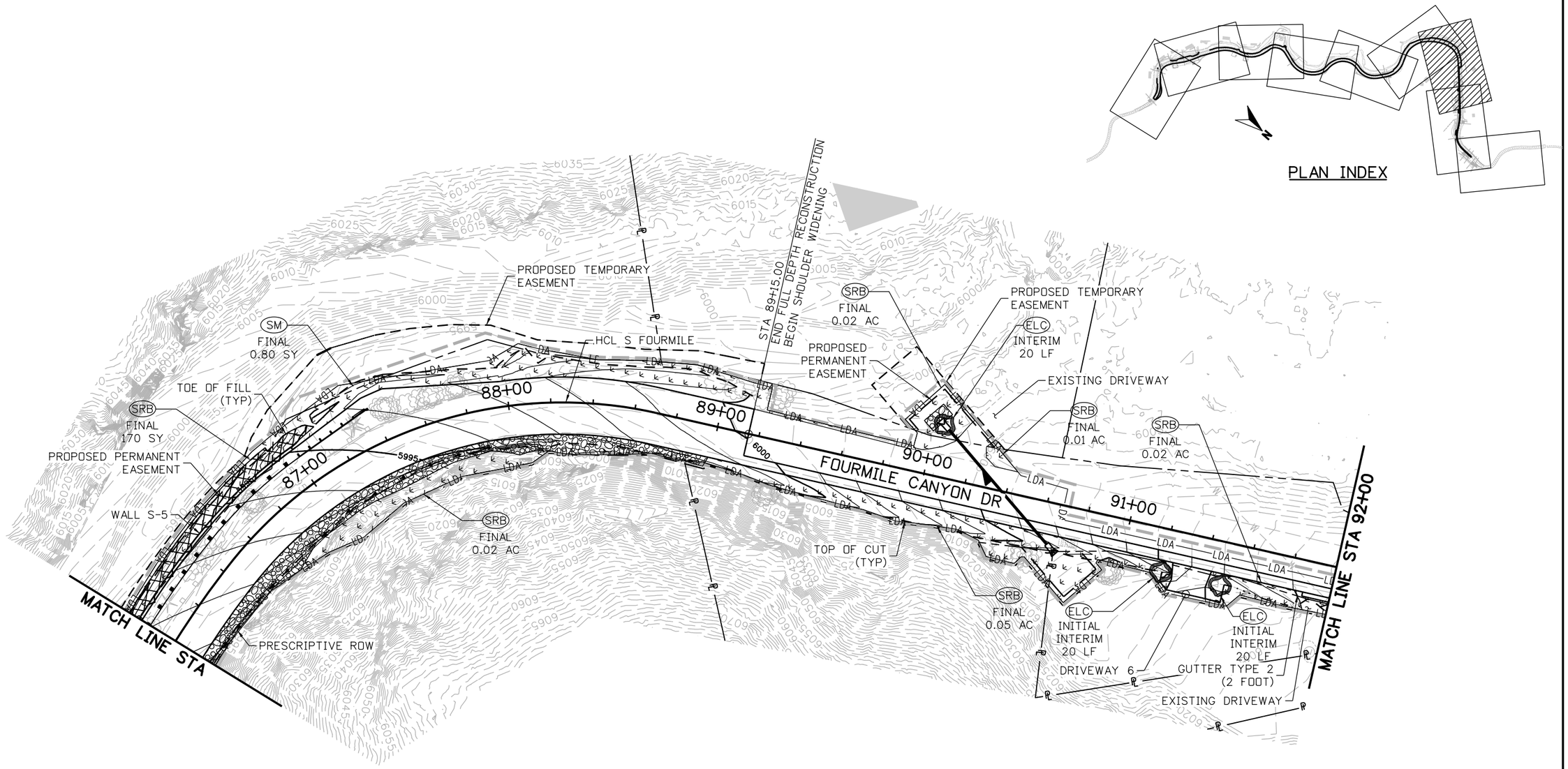

LEGEND

LOC	LIMITS OF CONSTRUCTION (UPDATE AS NECESSARY)	ELC	EROSION LOG FOR CULVERT	VTC	VEHICLE TRACKING PAD
LDA	LDA — LDA — LDA — LIMITS OF DISTURBED AREA (UPDATE AS NECESSARY)	EL	EROSION LOG FOR DITCH	CW	CONCRETE WASHOUT STRUCTURE
SF	SF — SF — SF — SILT FENCE	CD	ROCK CHECK DAM		RIPRAP
PF	PF — PF — PF — PLASTIC FENCE	SRB	SOIL RETENTION BLANKET		FLOW ARROW
EL	EROSION LOG	SM	SEEDING AND MULCHING		
		IP	INLET PROTECTION		

N

25 0 25 50 FT
HORIZONTAL SCALE: 1"=50'

60% SET

CALL UTILITY NOTIFICATION CENTER OF COLORADO
811
CALL 2-BUSINESS DAYS IN ADVANCE BEFORE YOU DIG, GRADE, OR EXCAVATE FOR THE MARKING OF UNDERGROUND MEMBER UTILITIES

REVISIONS:	NO.	DATE	REVISION DESCRIPTION:

Boulder County

BOULDER COUNTY TRANSPORTATION DEPARTMENT
ENGINEERING DIVISION

Michael Baker INTERNATIONAL

DESIGNED:	CAD:	CHECKED:	DATE:
JAM	EAV		05/11/16

FOURMILE CANYON DR (SOUTH)
SWMP PLANS
(7 OF 8)

PROJECT NO: 4043.SEPT12C36 | SHEET NO: 178

jbann.murray 7:36:33 PM 8/30/2016 pw:\\DCPWAPP1bkr.mbakercorp.com:pwprod\Documents\Projects\Lakewood_Office\Boulder_County_Emergency_Transportation\TO3\08_Sheet_Files\11_SWMP\DGN\South\Fourmile_SWMP_S-Plan07.dgn

LEGEND

LOC	— — —	LIMITS OF CONSTRUCTION (UPDATE AS NECESSARY)
LDA	—LDA—LDA	LIMITS OF DISTURBED AREA (UPDATE AS NECESSARY)
SF	—SF——SF	SILT FENCE
PF	—PF——PF	PLASTIC FENCE
EL		EROSION LOG
ELC		EROSION LOG FOR CULVERT
EL		EROSION LOG FOR DITCH
CD		ROCK CHECK DAM
SRB		SOIL RETENTION BLANKET
SM		SEEDING AND MULCHING
IP		INLET PROTECTION
VTC		VEHICLE TRACKING PAD
CW		CONCRETE WASHOUT STRUCTURE
		RIPRAP
		FLOW ARROW

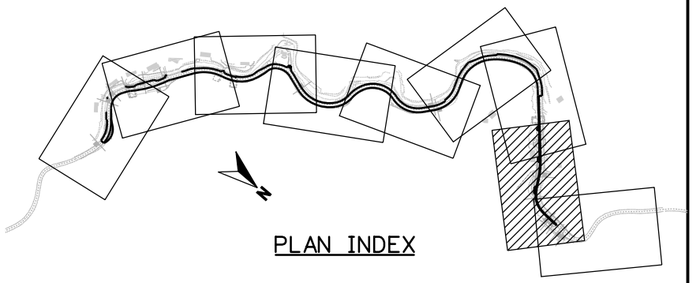

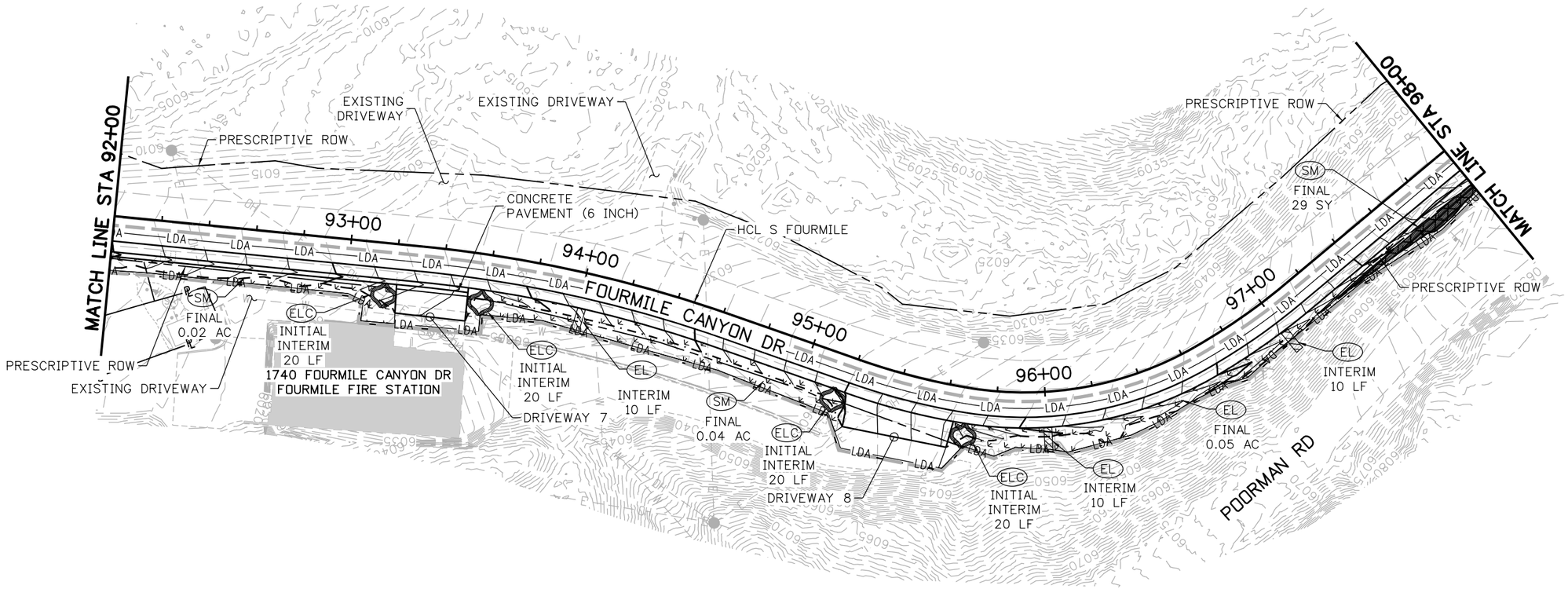

25 0 25 50 FT
HORIZONTAL SCALE: 1"=50'

60% SET

CALL UTILITY NOTIFICATION CENTER OF COLORADO
811
CALL 2-BUSINESS DAYS IN ADVANCE BEFORE YOU DIG, GRADE, OR EXCAVATE FOR THE MARKING OF UNDERGROUND MEMBER UTILITIES

REVISIONS: NO.	DATE	REVISION DESCRIPTION:

BOULDER COUNTY TRANSPORTATION DEPARTMENT
ENGINEERING DIVISION
Boulder County
Michael Baker INTERNATIONAL

DESIGNED:	CAD:	CHECKED:	DATE:
JAM	EAV	DTW	05/11/16

FOURMILE CANYON DR (SOUTH)
SWMP PLANS
(8 OF 9)

PROJECT NO: 4043.SEPT12C36 | SHEET NO: 179

joann.murray 7:36:52 PM 8/30/2016 pw:\\DCPWAPP1.bkr.mbakercorp.com:pwprod\Documents\Projects\Lakewood_Office\Boulder_County_Emergency_Transportation\TO3\08_Sheet_Files\11_SWMP\DGN\South\Fournile_SWMP_S-Plan08.dgn

LEGEND

LOC	LIMITS OF CONSTRUCTION (UPDATE AS NECESSARY)
LDA — LDA — LDA	LIMITS OF DISTURBED AREA (UPDATE AS NECESSARY)
SF — SF — SF	SILT FENCE
PF — PF — PF	PLASTIC FENCE
EL	EROSION LOG
ELC	EROSION LOG FOR CULVERT
EL	EROSION LOG FOR DITCH
CD	ROCK CHECK DAM
SRB	SOIL RETENTION BLANKET
SM	SEEDING AND MULCHING
IP	INLET PROTECTION
VTC	VEHICLE TRACKING PAD
CW	CONCRETE WASHOUT STRUCTURE
	RIPRAP
	FLOW ARROW

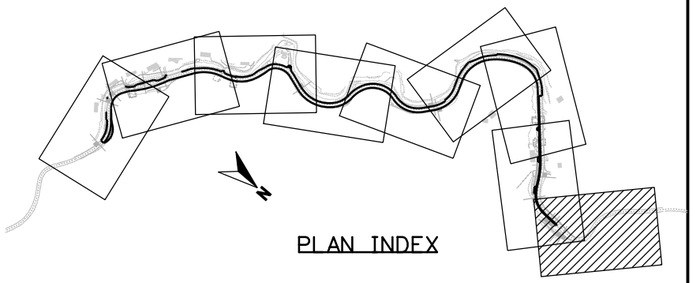

PLAN INDEX

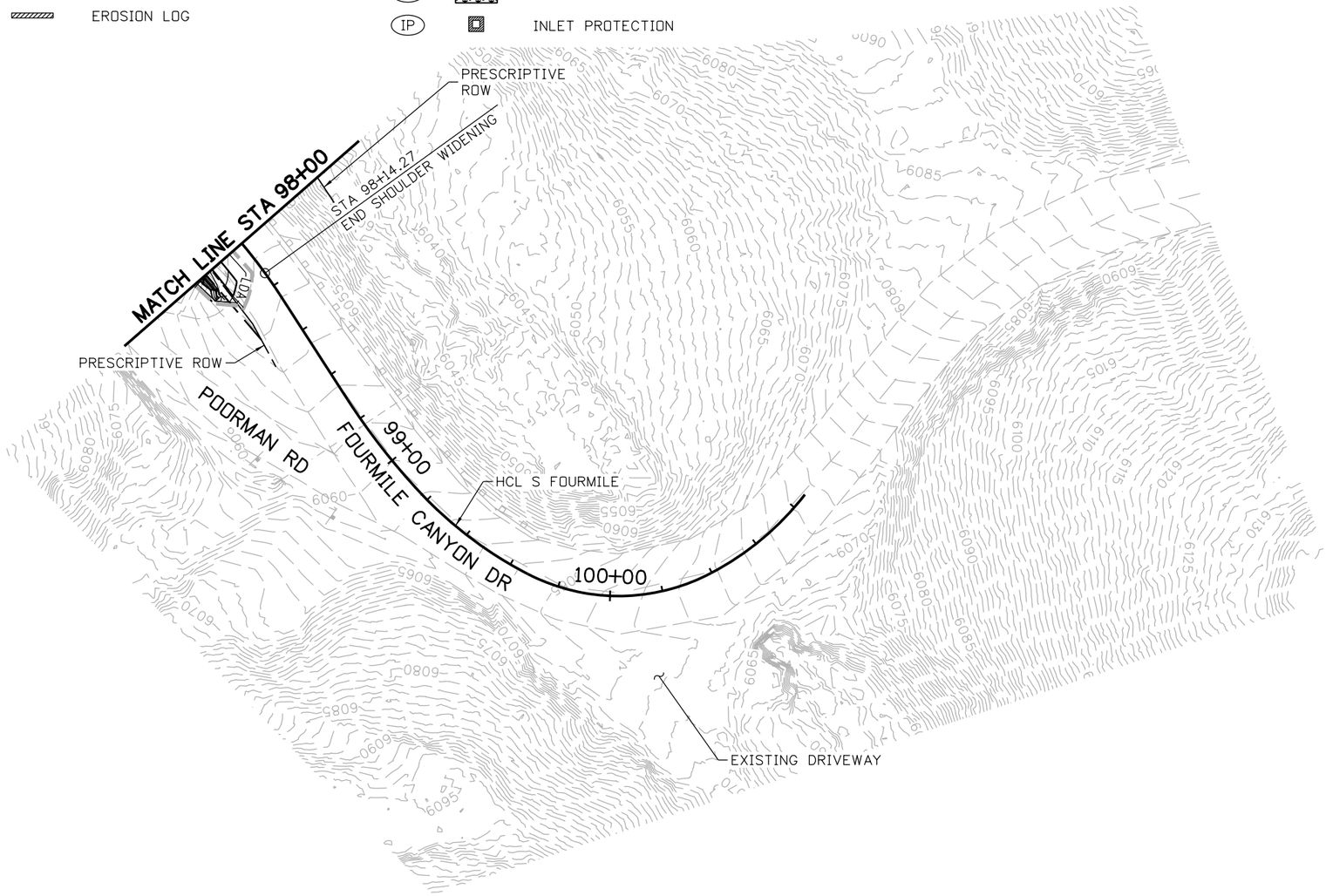

25 0 25 50 FT
HORIZONTAL SCALE: 1"=50'

60% SET

CALL UTILITY NOTIFICATION CENTER OF COLORADO
811
CALL 2-BUSINESS DAYS IN ADVANCE BEFORE YOU DIG, GRADE, OR EXCAVATE FOR THE MARKING OF UNDERGROUND MEMBER UTILITIES

REVISIONS:	NO.	DATE	REVISION DESCRIPTION:

Boulder County

BOULDER COUNTY TRANSPORTATION DEPARTMENT
ENGINEERING DIVISION

Michael Baker INTERNATIONAL

DESIGNED:	CAD:	CHECKED:	DATE:
JAM	EAV	DTW	05/11/16

FOURMILE CANYON DR (SOUTH)
SWMP PLANS
(9 OF 9)

PROJECT NO: 4043.SEPT12C36 | SHEET NO: 180

joann.murray 7:37:11 PM 8/30/2016 pw:\\DCPWAPP1.bkr.mbakercorp.com:pwprod\Documents\Projects\Lakewood_Office\Boulder_County_Emergency_Transportation\T03\08_Sheet_Files\11_SWMP\DGN\South\Fourmile_SWMP_S-Plan09.dgn

LEGEND

LOC	LIMITS OF CONSTRUCTION (UPDATE AS NECESSARY)
LDA — LDA — LDA	LIMITS OF DISTURBED AREA (UPDATE AS NECESSARY)
SF — SF — SF	SILT FENCE
PF — PF — PF	PLASTIC FENCE
EL	EROSION LOG
ELC	EROSION LOG FOR CULVERT
EL	EROSION LOG FOR DITCH
CD	ROCK CHECK DAM
SRB	SOIL RETENTION BLANKET
SM	SEEDING AND MULCHING
IP	INLET PROTECTION
VTC	VEHICLE TRACKING PAD
CW	CONCRETE WASHOUT STRUCTURE
	RIPRAP
	FLOW ARROW

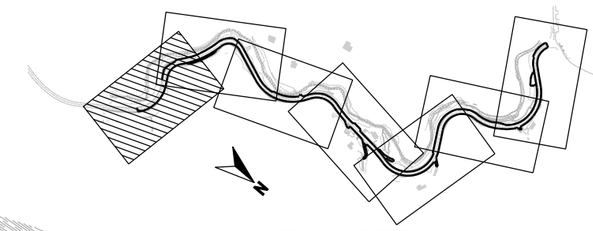

PLAN INDEX

556 WILD TURKEY TRL
(APN: 146117000070)

FOURMILE CREEK

TOE OF FILL (TYP)

SRB FINAL 80 SY

EL INTERIM 105 LF

PRESCRIPTIVE ROW

WALL N-2

SF INTERIM 370 LF

SM FINAL 0.45 AC

PROPOSED TEMPORARY EASEMENT

5411 SUNSHINE CANYON DR
(APN: 146117000034)

PRESCRIPTIVE ROW

SF INTERIM 45 LF

EL INTERIM 16 LF

PROPOSED PERMANENT EASEMENT

SRB FINAL 185 SY

TOP OF CUT (TYP)

WALL N-1

HCL N FOURMILE

4000 FOURMILE CANYON DR

PRESCRIPTIVE ROW

216+00

217+00

218+00

219+00

220+00

221+00

MATCH LINE STA 222+00

FOURMILE CANYON DR

TOE OF FILL (TYP)

EL INTERIM 10 LF x 2

SM FINAL 0.05 AC

PRESCRIPTIVE ROW

FIRE DEPT. PULLOUT (SOFT SURFACE)

EL INTERIM 10 LF x 2

SM FINAL 0.01 AC

ENVIRONMENTAL AREA OF CONCERN PROTECT IN PLACE

BEGIN FULL DEPTH RECONSTRUCTION STA 216+72.14

TOP OF CUT (TYP)

P-N-100

EL INTERIM 10 LF

556 WILD TURKEY TRL
(APN: 146117000070)

N

25 0 25 50 FT
HORIZONTAL SCALE: 1"=50'

60% SET

CALL UTILITY NOTIFICATION CENTER OF COLORADO
811
CALL 2-BUSINESS DAYS IN ADVANCE BEFORE YOU DIG, GRADE, OR EXCAVATE FOR THE MARKING OF UNDERGROUND MEMBER UTILITIES

REVISIONS:	NO.	DATE	REVISION DESCRIPTION:

BOULDER COUNTY TRANSPORTATION DEPARTMENT
ENGINEERING DIVISION

Boulder County

Michael Baker INTERNATIONAL

DESIGNED:	CAD:	CHECKED:	DATE:
JAM	EAV	DTW	

FOURMILE CANYON DR (NORTH)
SWMP PLANS
(1 OF 7)

PROJECT NO: 4043.SEPT12C36 | SHEET NO: 181

joann.murray 7:37:29 PM 8/30/2016 pw:\\DCPWAPP1.bkr.mbakercorp.com:pwprod\Documents\Projects\Lakewood_Office\Boulder_County_Emergency_Transportation\T03\08_Sheet_Files\11_SWMP\DGN\North\Fourmile_SWMP_N-Plan01.dgn

LEGEND

LOC	LIMITS OF CONSTRUCTION (UPDATE AS NECESSARY)
LDA — LDA — LDA	LIMITS OF DISTURBED AREA (UPDATE AS NECESSARY)
SF — SF — SF	SILT FENCE
PF — PF — PF	PLASTIC FENCE
EL	EROSION LOG
ELC	EROSION LOG FOR CULVERT
EL	EROSION LOG FOR DITCH
CD	ROCK CHECK DAM
SRB	SOIL RETENTION BLANKET
SM	SEEDING AND MULCHING
IP	INLET PROTECTION
VTC	VEHICLE TRACKING PAD
CW	CONCRETE WASHOUT STRUCTURE
	RIPRAP
	FLOW ARROW

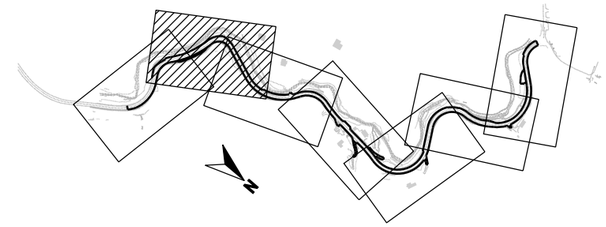

PLAN INDEX

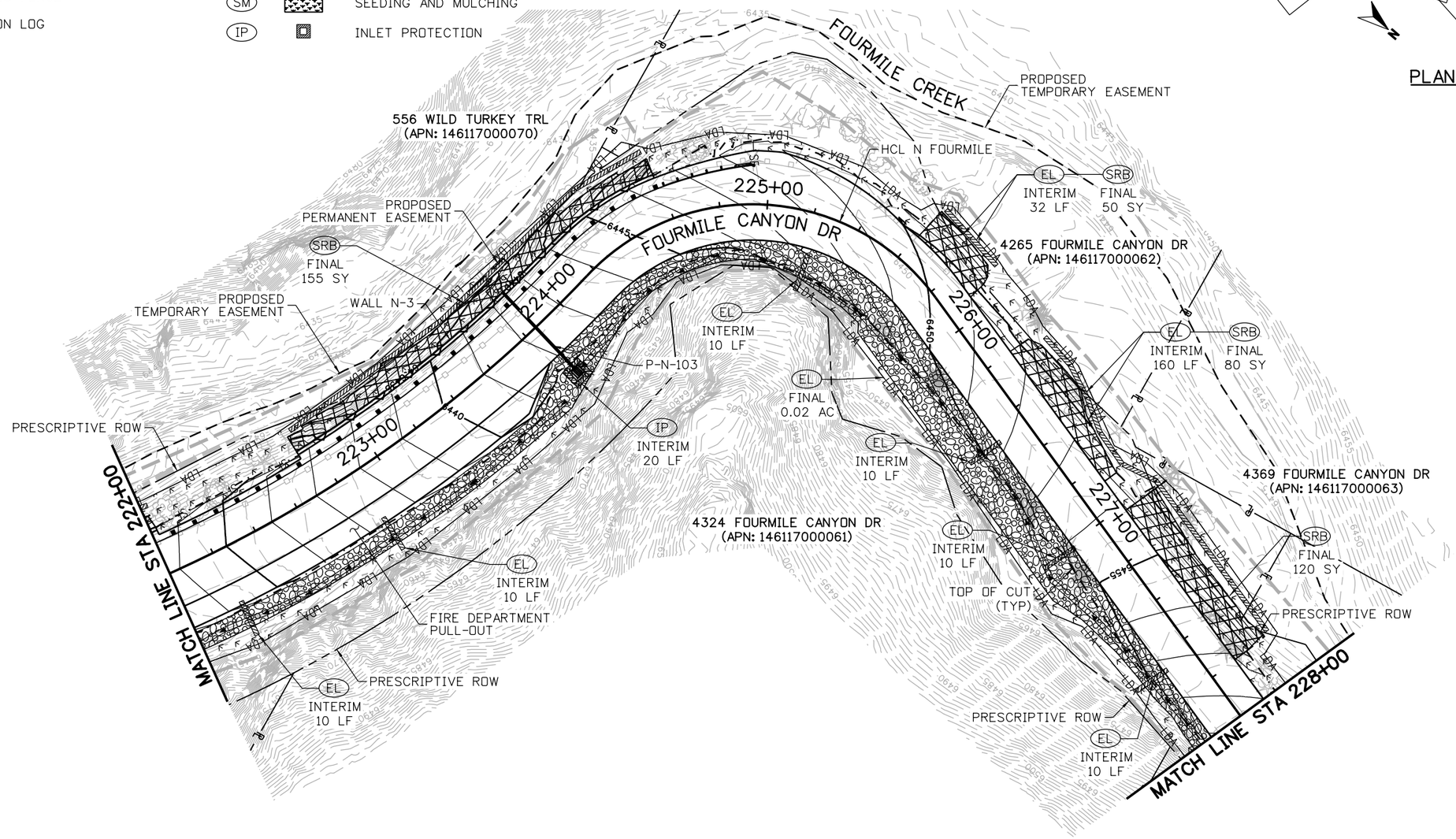

25 0 25 50 FT
HORIZONTAL SCALE: 1"=50'

60% SET

CALL UTILITY NOTIFICATION CENTER OF COLORADO
811
CALL 2-BUSINESS DAYS IN ADVANCE BEFORE YOU DIG, GRADE, OR EXCAVATE FOR THE MARKING OF UNDERGROUND MEMBER UTILITIES

REVISIONS: NO.	DATE	REVISION DESCRIPTION:

Boulder County

BOULDER COUNTY TRANSPORTATION DEPARTMENT
ENGINEERING DIVISION

Michael Baker INTERNATIONAL

DESIGNED:	CAD:	CHECKED:	DATE:
JAM	EAV	DTW	

FOURMILE CANYON DR (NORTH)
SWMP PLANS
(2 OF 7)

PROJECT NO: 4043.SEPT12C36 | SHEET NO: 182

jpann.murray 7:37:48 PM 8/30/2016 pw:\\DCPWAPP1.bkr.mbakercorp.com:pwprod\Documents\Projects\Lakewood_Office\Boulder_County_Emergency_Transportation\T03\08_Sheet_Files\11_SWMP\DGN\North\Fourmile_SWMP_N-Plan02.dgn

LEGEND

LOC	LIMITS OF CONSTRUCTION (UPDATE AS NECESSARY)
LDA — LDA — LDA	LIMITS OF DISTURBED AREA (UPDATE AS NECESSARY)
SF — SF — SF	SILT FENCE
PF — PF — PF	PLASTIC FENCE
EL	EROSION LOG
ELC	EROSION LOG FOR CULVERT
EL	EROSION LOG FOR DITCH
CD	ROCK CHECK DAM
SRB	SOIL RETENTION BLANKET
SM	SEEDING AND MULCHING
IP	INLET PROTECTION
VTC	VEHICLE TRACKING PAD
CW	CONCRETE WASHOUT STRUCTURE
	RIPRAP
	FLOW ARROW

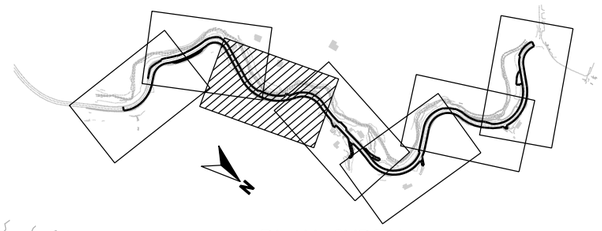

PLAN INDEX

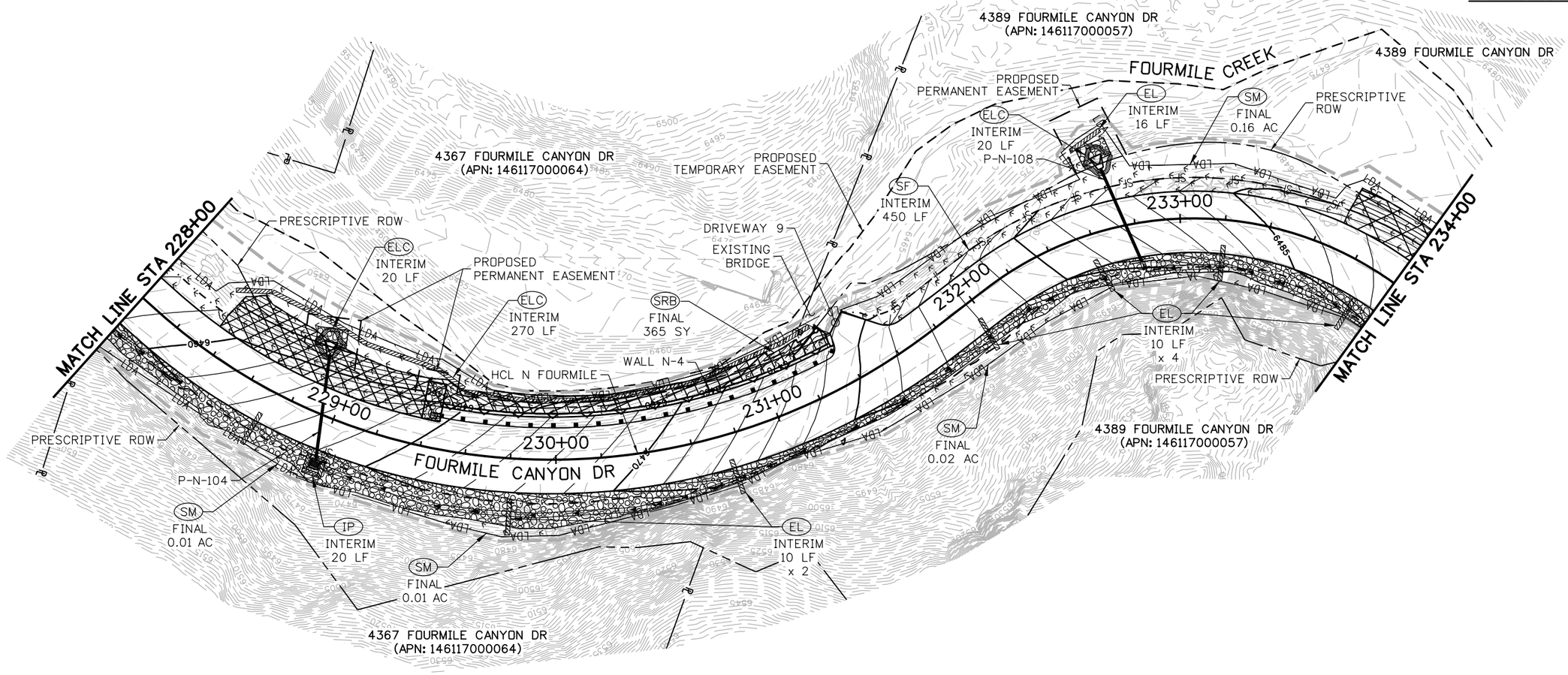

25 0 25 50 FT
HORIZONTAL SCALE: 1"=50'

60% SET

CALL UTILITY NOTIFICATION CENTER OF COLORADO
811
CALL 2-BUSINESS DAYS IN ADVANCE BEFORE YOU DIG, GRADE, OR EXCAVATE FOR THE MARKING OF UNDERGROUND MEMBER UTILITIES

REVISIONS:	NO.	DATE	REVISION DESCRIPTION:

Boulder County

BOULDER COUNTY TRANSPORTATION DEPARTMENT
ENGINEERING DIVISION

Michael Baker INTERNATIONAL

DESIGNED:	CAD:	CHECKED:	DATE:
JAM	EAV	DTW	

FOURMILE CANYON DR (NORTH)
SWMP PLANS
(3 OF 7)

PROJECT NO: 4043.SEPT12C36 | SHEET NO: 183

jcann.murray 7:38:08 PM 8/30/2016 pw:\\DCPWAPP1.bkr.mbakercorp.com:pwprod\Documents\Projects\Lakewood_Office\Boulder_County_Emergency_Transportation\TO3\08_Sheet_Files\11_SWMP\DGN\North\Fourmile_SWMP_N-Plan03.dgn

LEGEND

- (LOC) — — — LIMITS OF CONSTRUCTION (UPDATE AS NECESSARY)
- (LDA) —LDA—LDA LIMITS OF DISTURBED AREA (UPDATE AS NECESSARY)
- (SF) —SF—SF SILT FENCE
- (PF) —PF—PF PLASTIC FENCE
- (EL) EROSION LOG
- (ELC) EROSION LOG FOR CULVERT
- (EL) EROSION LOG FOR DITCH
- (CD) ROCK CHECK DAM
- (SRB) SOIL RETENTION BLANKET
- (SM) SEEDING AND MULCHING
- (IP) INLET PROTECTION
- (VTC) VEHICLE TRACKING PAD
- (CW) CONCRETE WASHOUT STRUCTURE
- RIPRAP
- FLOW ARROW

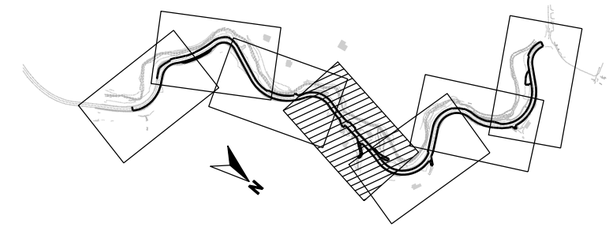

PLAN INDEX

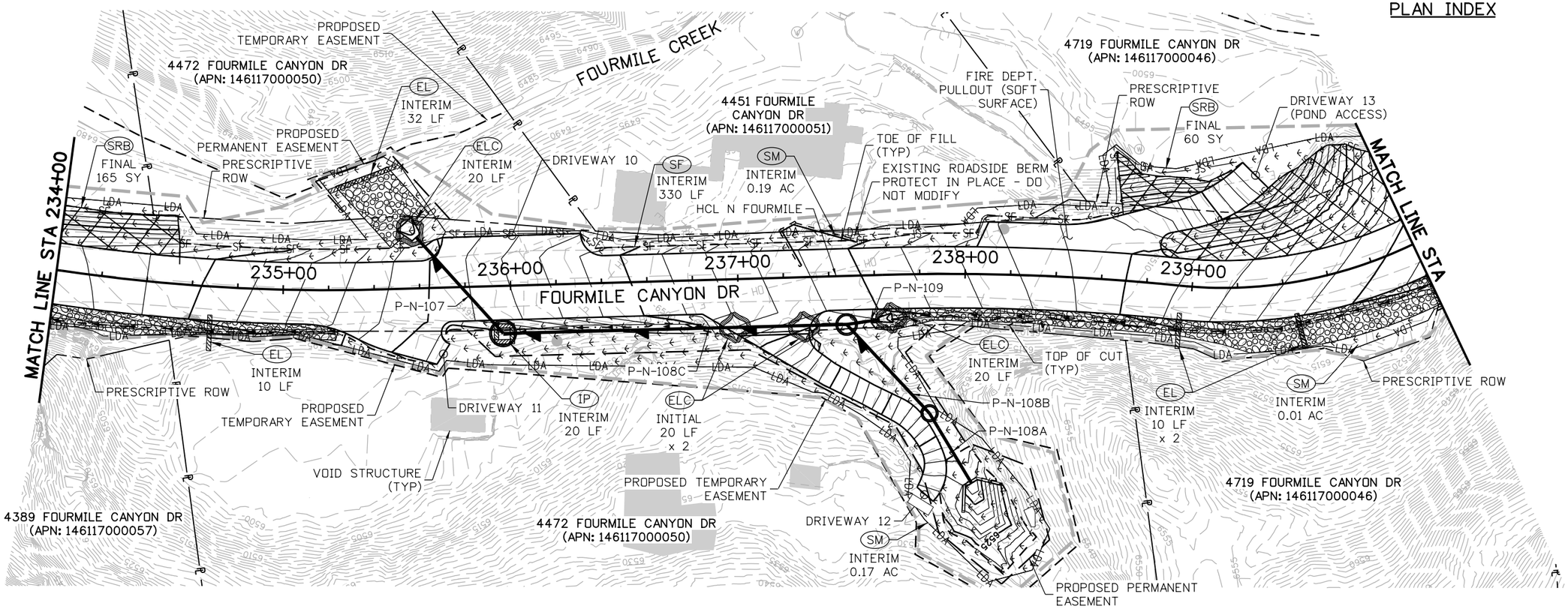

N

25 0 25 50 FT
HORIZONTAL SCALE: 1"=50'

60% SET

CALL UTILITY NOTIFICATION CENTER OF COLORADO
811
CALL 2-BUSINESS DAYS IN ADVANCE BEFORE YOU DIG, GRADE, OR EXCAVATE FOR THE MARKING OF UNDERGROUND MEMBER UTILITIES

REVISIONS:	NO.	DATE	REVISION DESCRIPTION:

Boulder County

BOULDER COUNTY TRANSPORTATION DEPARTMENT
ENGINEERING DIVISION

Michael Baker INTERNATIONAL

DESIGNED:	CAD:	CHECKED:	DATE:
JAM	EAV	DTW	

FOURMILE CANYON DR (NORTH)
SWMP PLANS (4 OF 7)

PROJECT NO: 4043.SEPT12C36 | SHEET NO: 184

joann.murray 7:38:27 PM 8/30/2016 pw:\\DCPWAPP1bkr.mbakercorp.com:pwprod\Documents\Projects\Lakewood_Office\Boulder_County_Emergency_Transportation\TO3\08_Sheet_Files\11_SWMP\DGN\North\Fourmile_SWMP_N-Plan04.dgn

LEGEND

LOC	LIMITS OF CONSTRUCTION (UPDATE AS NECESSARY)
LDA — LDA — LDA	LIMITS OF DISTURBED AREA (UPDATE AS NECESSARY)
SF — SF — SF	SILT FENCE
PF — PF — PF	PLASTIC FENCE
EL	EROSION LOG
ELC	EROSION LOG FOR CULVERT
EL	EROSION LOG FOR DITCH
CD	ROCK CHECK DAM
SRB	SOIL RETENTION BLANKET
SM	SEEDING AND MULCHING
IP	INLET PROTECTION
VTC	VEHICLE TRACKING PAD
CW	CONCRETE WASHOUT STRUCTURE
	RIPRAP
	FLOW ARROW

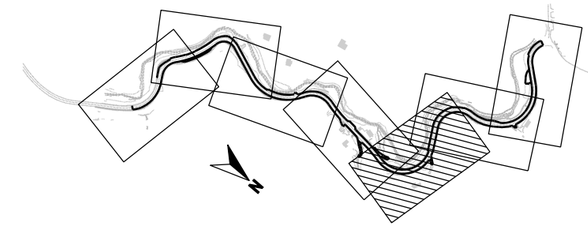

PLAN INDEX

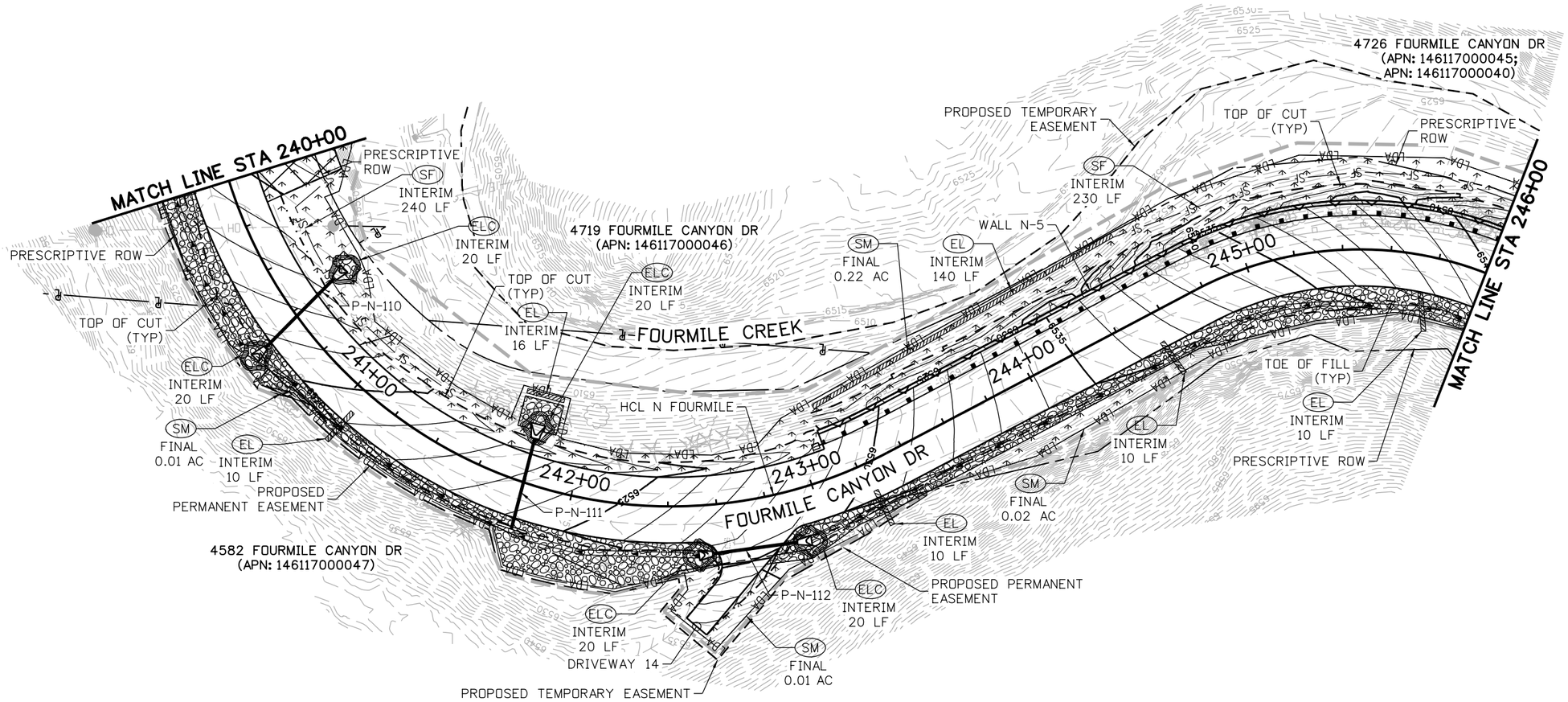

25 0 25 50 FT
HORIZONTAL SCALE: 1"=50'

60% SET

CALL UTILITY NOTIFICATION CENTER OF COLORADO
811
CALL 2-BUSINESS DAYS IN ADVANCE BEFORE YOU DIG, GRADE, OR EXCAVATE FOR THE MARKING OF UNDERGROUND MEMBER UTILITIES

REVISIONS: NO.	DATE	REVISION DESCRIPTION:

Boulder County
Michael Baker INTERNATIONAL

BOULDER COUNTY TRANSPORTATION DEPARTMENT
ENGINEERING DIVISION

DESIGNED:	CAD:	CHECKED:	DATE:
JAM	EAV	DTW	

FOURMILE CANYON DR (NORTH)
SWMP PLANS
(5 OF 7)

PROJECT NO: 4043.SEPT12C36 | SHEET NO: 185

joann.murray 7:38:45 PM 8/30/2016 pw:\\DCPWAPP1.bkr.mbakercorp.com:pwprod\Documents\Projects\Lakewood_Office\Boulder_County_Emergency_Transportation\T03\08_Sheet_Files\11_SWMP\DGN\North\Fourmile_SWMP_N-Plan05.dgn

LEGEND

- (LOC) — — — LIMITS OF CONSTRUCTION (UPDATE AS NECESSARY)
- (LDA) —LDA—LDA LIMITS OF DISTURBED AREA (UPDATE AS NECESSARY)
- (SF) —SF——SF SILT FENCE
- (PF) —PF——PF PLASTIC FENCE
- (EL) EROSION LOG
- (ELC) EROSION LOG FOR CULVERT
- (EL) EROSION LOG FOR DITCH
- (CD) ROCK CHECK DAM
- (SRB) SOIL RETENTION BLANKET
- (SM) SEEDING AND MULCHING
- (IP) INLET PROTECTION
- (VTC) VEHICLE TRACKING PAD
- (CW) CONCRETE WASHOUT STRUCTURE
- RIPRAP
- FLOW ARROW

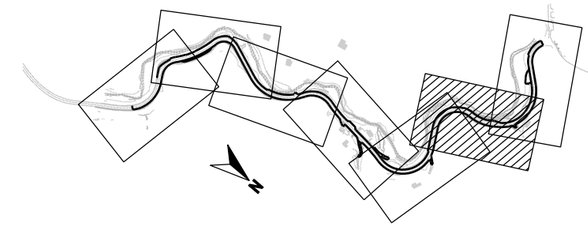

PLAN INDEX

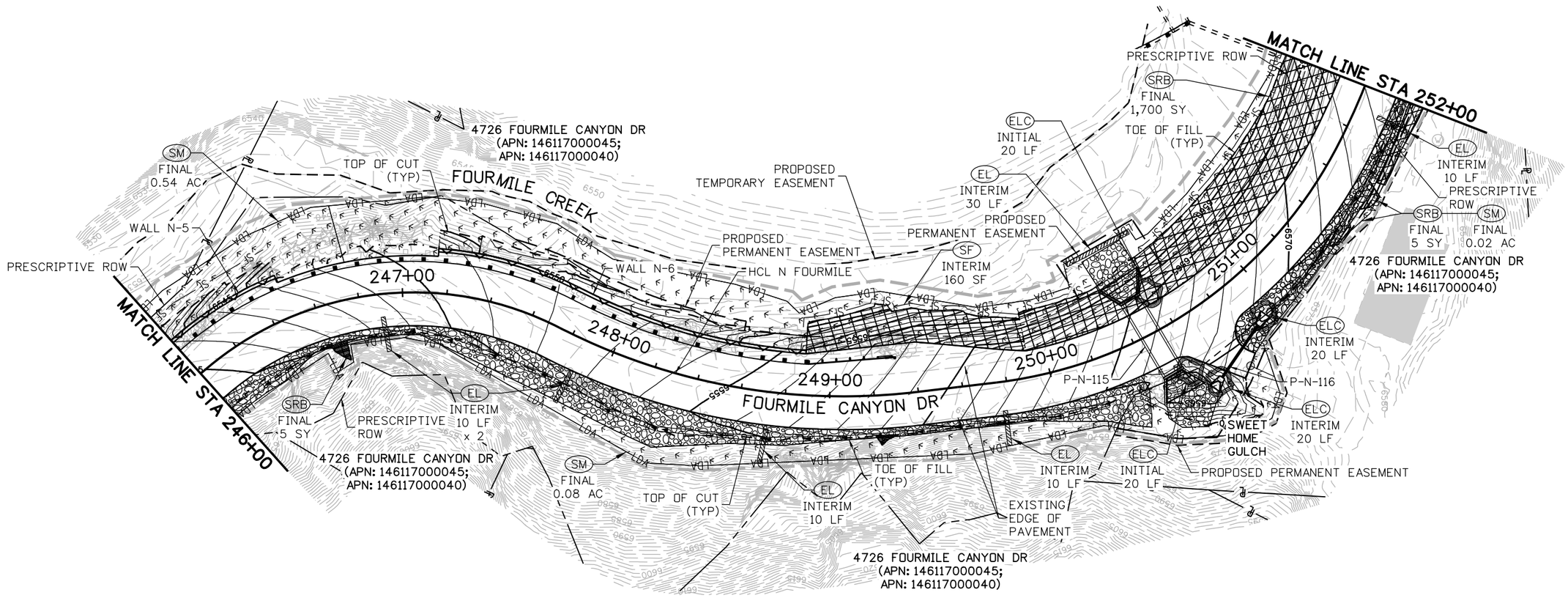

25 0 25 50 FT
HORIZONTAL SCALE: 1"=50'

60% SET

CALL UTILITY NOTIFICATION CENTER OF COLORADO
811
CALL 2-BUSINESS DAYS IN ADVANCE BEFORE YOU DIG, GRADE, OR EXCAVATE FOR THE MARKING OF UNDERGROUND MEMBER UTILITIES

REVISIONS:	NO.	DATE	REVISION DESCRIPTION:

BOULDER COUNTY TRANSPORTATION DEPARTMENT
ENGINEERING DIVISION
Michael Baker INTERNATIONAL

DESIGNED:	CAD:	CHECKED:	DATE:
JAM	EAV	DTW	

FOURMILE CANYON DR (NORTH)
SWMP PLANS
(6 OF 7)

PROJECT NO: 4043.SEPT12C36 SHEET NO: 186

joann.murray 7:39:04 PM 8/30/2016 pw:\\DCPWAPP1.bkr.mbakercorp.com:pwprod\Documents\Projects\Lakewood_Office\Boulder_County_Emergency_Transportation\TO3\08_Sheet_Files\11_SWMP\DGN\North\Fourmile_SWMP_N-Plan06.dgn

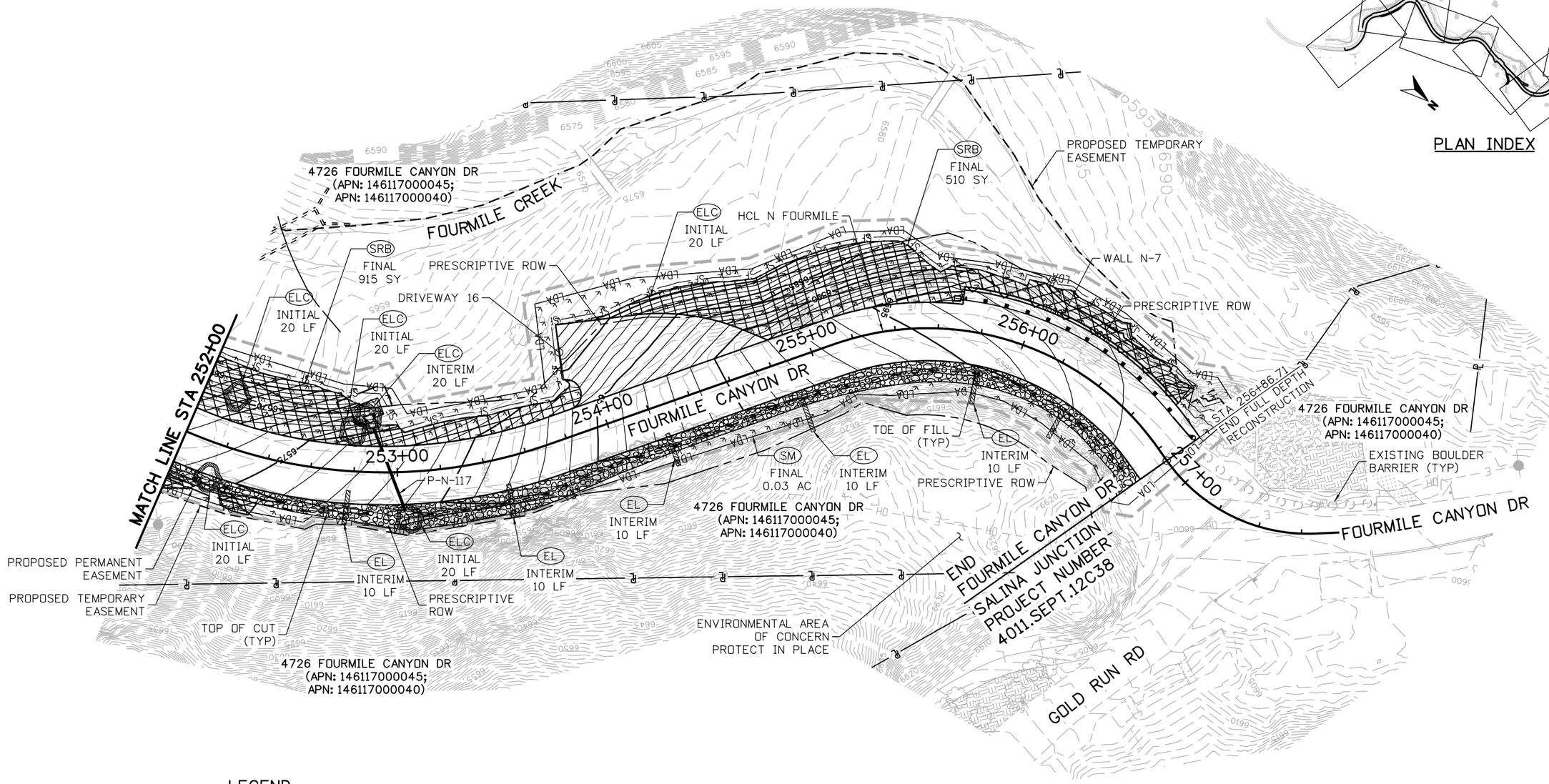

LEGEND

LOC		LIMITS OF CONSTRUCTION (UPDATE AS NECESSARY)
LDA	—LDA—LDA	LIMITS OF DISTURBED AREA (UPDATE AS NECESSARY)
SF	—SF——SF	SILT FENCE
PF	—PF——PF	PLASTIC FENCE
EL		EROSION LOG
ELC		EROSION LOG FOR CULVERT
EL		EROSION LOG FOR DITCH
CD		ROCK CHECK DAM
SRB		SOIL RETENTION BLANKET
SM		SEEDING AND MULCHING
IP		INLET PROTECTION
VTC		VEHICLE TRACKING PAD
CW		CONCRETE WASHOUT STRUCTURE
		RIPRAP
		FLOW ARROW

25 0 25 50 FT
HORIZONTAL SCALE: 1"=50'

30% SET

CALL UTILITY NOTIFICATION CENTER OF COLORADO
811
CALL 2-BUSINESS DAYS IN ADVANCE BEFORE YOU DIG, GRADE, OR EXCAVATE FOR THE MARKING OF UNDERGROUND MEMBER UTILITIES

REVISIONS:	NO.	DATE	REVISION DESCRIPTION:

Boulder County
BOULDER COUNTY TRANSPORTATION DEPARTMENT
ENGINEERING DIVISION
Michael Baker INTERNATIONAL

DESIGNED:	CAD:	CHECKED:	DATE:
MEM	EAV	DTW	05/11/16

FOURMILE CANYON DR (NORTH)
SWMP PLANS
(7 OF 7)

PROJECT NO: 4043.SEPT12C36 | SHEET NO: 187

jconn.murray 7:39:22 PM 8/30/2016 pw:\\DCPWAPP1bkr.mbakercorp.com:pwprod\Documents\Projects\Lakewood_Office\Boulder_County_Emergency_Transportation\TO3\08_Sheet_Files\11_SWMP\DGN\North\Fourmile_SWMP_N-Plan07.dgn