Oversight / NHS	
FHWA FULL OVERSIGHT?	■ NO □ YES
NATIONAL HIGHWAY SYSTEM?	■ NO □ YES

BOULDER COUNTY TRANSPORTATION DEPARTMENT STATE OF COLORADO

HIGHWAY CONSTRUCTION BID PLANS OF PROPOSED

FEDERAL AID PROJECT NO. XX XXXX-XXX

N. CEDAR BROOK RD

BOULDER COUNTY

CONSTRUCTION PROJECT CODE NO. XXXXX

Related Projects:
P. E. UNDER PROJECT:
Project Number: XXXXXXXX
Project Code: XXXXX

R.O.W. Projects:
R.O.W. Project Description

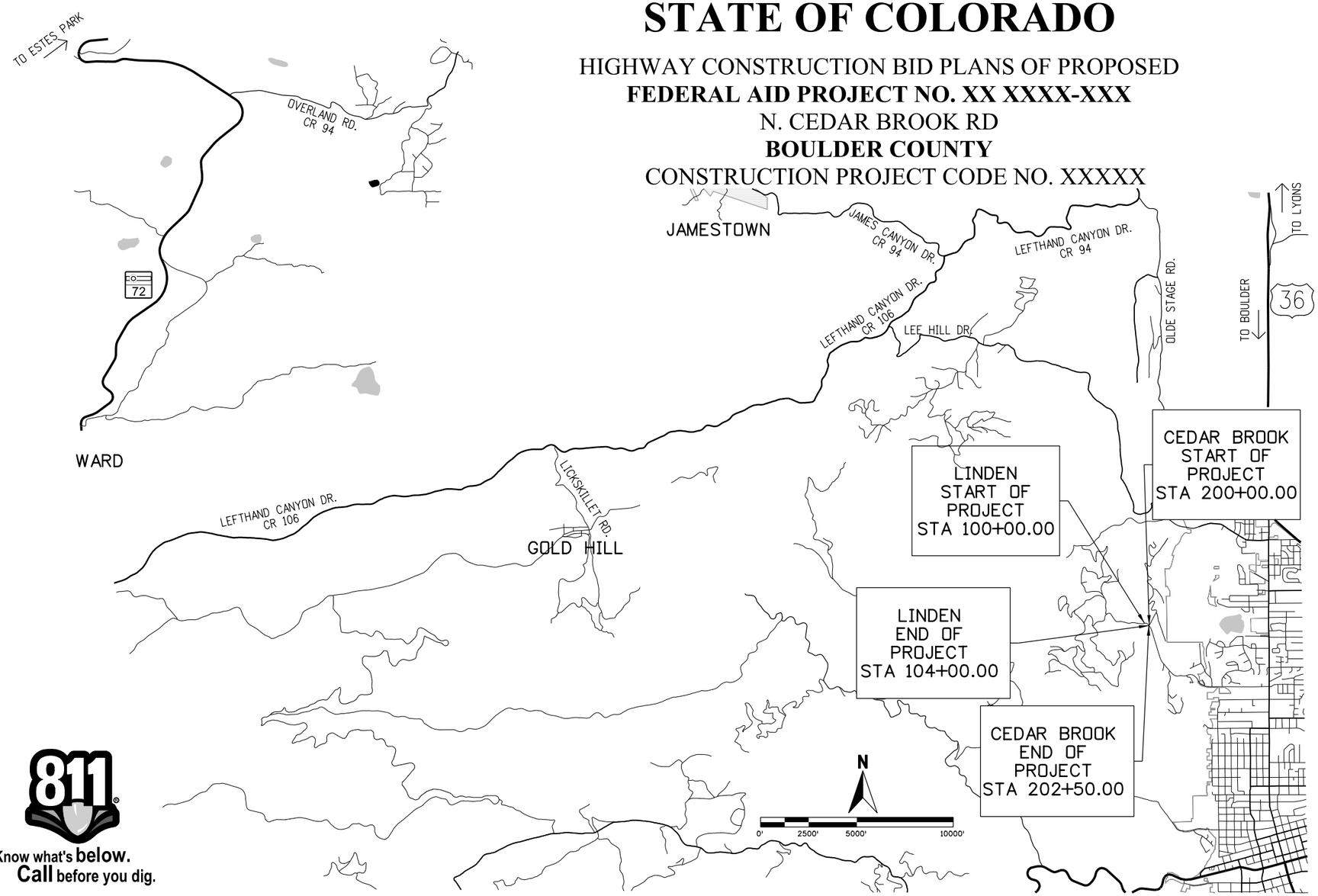

TABULATION OF LENGTH & DESIGN DATA

STATION	LINEAR FEET ROADWAY	LINEAR FEET MAJOR STR.
STA 100+00.00 LINDEN DR BEGIN LINDEN DR STA 104+00.00 LINDEN DR END LINDEN DR	400.00	0.08
STA 200+00.00 N. CEDAR BROOK RD BEGIN CEDAR BROOK STA 202+50.00 CEDAR BROOK DR END CEDAR BROOK	250.00	0.05
TOTAL	650.00	0.12
SUMMARY OF PROJECT LENGTH	FEET	MILES
ROADWAY	650.00	0.12
MAJOR STRUCTURE	0.12	0.00
PROJECT GROSS LENGTH	650.12	0.12

DESIGN DATA	LINDEN	CEDAR BROOK
MINIMUM RADIUS OF CURVE	130'	250'
MAXIMUM GRADE	8.39%	5.13%
MINIMUM S.S.D. HORIZONTAL	287'	173'
MINIMUM S.S.D. VERTICAL	516'	124'
DESIGN SPEED	25 MPH	20 MPH
2013 TRAFFIC	ADT = 1400	ADT =>1400
DHV TRUCK %		
CLEAR ZONE DISTANCE	14'	12'

SHEET NO. INDEX OF SHEETS

1 COVER SHEET
2 TYPICAL SECTIONS
3 ROAD PLAN & PROFILE
4 60" PIPE LINDEN
5 CBC LINDEN
6 CBC CEDAR BROOK

PROGRESS SET

JULY 23, 2015

Know what's **below.** **Call** before you dig.

SCOPE OF WORK

THIS PROJECT CONSISTS OF RECONSTRUCTION OF LINDEN DR AND CEDAR BROOK DR, WHERE IT WAS DAMAGED BY THE SEPT 2013 FLOODING, AND INCLUDES THE INSTALLATION OF A 60" REINFORCED CONCRETE PIPE AND THREE 7'X7' CONCRETE BOX CULVERTS.
THE PROJECT IS APPROXIMATELY 650 FEET IN LENGTH.

Print Date: 7/23/2015
File Name: BOCO-CedarBrook_TitleSheet.dgn
Horiz. Scale: 1:6000 Vert. Scale: As Noted
Unit Information: Unit Leader Initials:

TRANSPORTATION
AECOM Technical Services, Inc.
717 Seventeenth Street, Suite 2600, Denver, CO 80202
T 303.228.3000 F 303.228.3001
AECOM
www.aecom.com

R-X

Sheet Revisions		
Date:	Comments	Init.

Colorado Department of Transportation
CDOT DEPARTMENT OF TRANSPORTATION
1050 Lee Hill Road
Boulder, CO 80302
Phone: 303-546-5658 FAX: 303-444-0751
Region 4

???

As Constructed
No Revisions:
Revised:
Void:

Contract Information
Contractor:
Resident Engineer:
Project Engineer:
PROJECT STARTED: ACCEPTED:
Comments:

Project No./Code
XX XXXXX-XXX
XXXXX
Sheet Number 1

rodriguezjl 7/23/2015 10:55:17 AM L:\0048\900-CAD\02-SHEETS\GVN. Cedar Brook\BOCO-CedarBrook_TitleSheet.dgn

TYPICAL SECTION LEGEND:

PGL	PROFILE GRADE LINE
ABC	AGGREGATE BASE COURSE
POSS	POINT OF SLOPE SELECTION
○	VERTICAL ALIGNMENT CONTROL POINTS
ϕ	4" TOPSOIL, SEEDING AND MULCHING OR SOIL RETENTION BLANKET
◿	2% TYPICAL

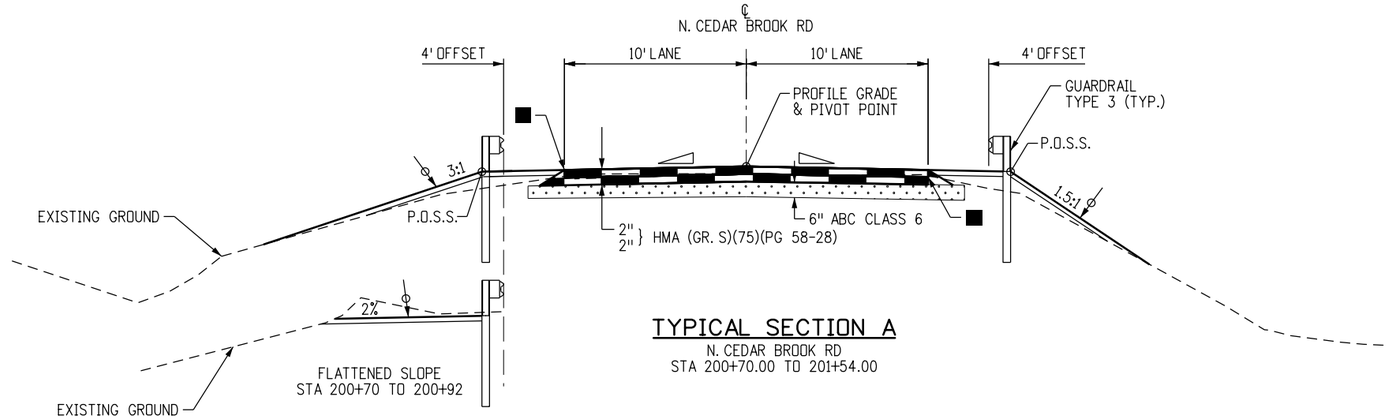

TYPICAL SECTION A

N. CEDAR BROOK RD
STA 200+70.00 TO 201+54.00

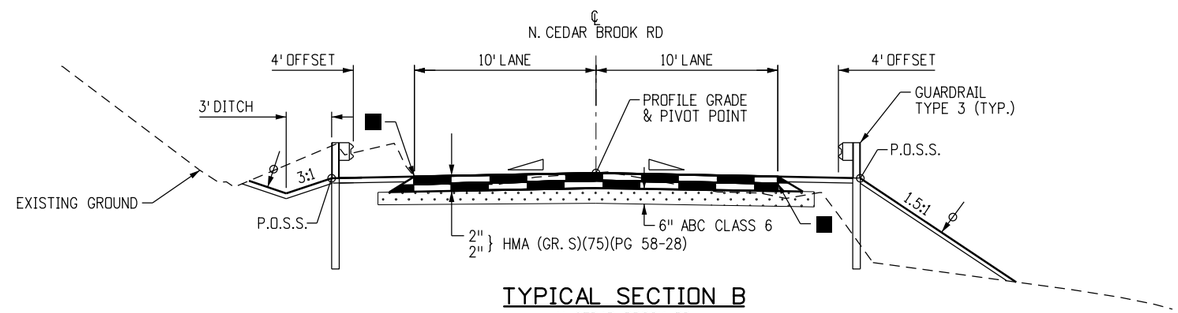

TYPICAL SECTION B

N. CEDAR BROOK RD
STA 201+54.00 TO 201+72.00

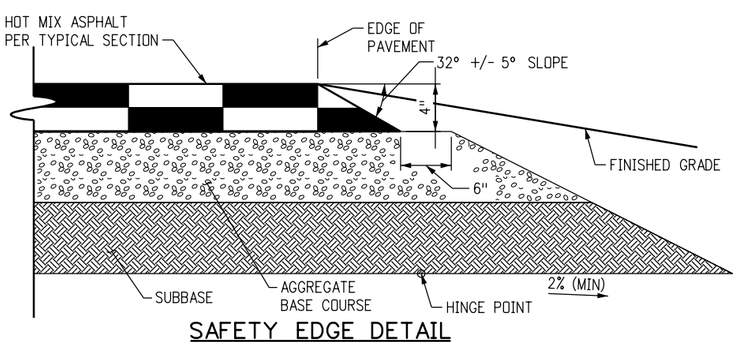

SAFETY EDGE DETAIL

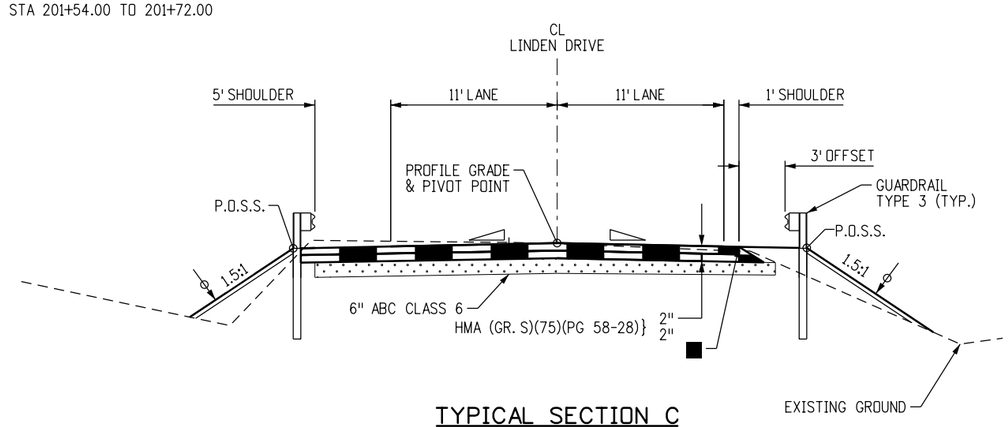

TYPICAL SECTION C

LINDEN DRIVE

SAFETY EDGE GENERAL NOTES

1. THE SAFETY EDGE WILL BE CONSTRUCTED AS PART OF THE ROADWAY PAVEMENT. A SHOULDER WEDGE DEVICE WILL BE ADDED TO THE SCREED OF THE PAVING MACHINE.
2. THE CONTRACTOR MAY USE A SHOULDER WEDGE MAKER OR A SIMILAR DEVICE THAT PRODUCES THE SAME COMPACTION RESULTS.
3. SHORT SECTIONS OF HANDWORK WILL BE ALLOWED WHEN NECESSARY FOR TRANSITIONS AND TURNOUTS.
4. THE SAFETY EDGE SHALL NOT BE INSTALLED IN FRONT OF GUARDRAIL OR AT INTERSECTIONS.

F.I.R. SUBMITTAL

F.I.R.

CALL UTILITY NOTIFICATION CENTER OF COLORADO
811
CALL 2-BUSINESS DAYS IN ADVANCE BEFORE YOU DIG, GRADE, OR EXCAVATE FOR THE MARKING OF UNDERGROUND MEMBER UTILITIES

REVISIONS:	NO.	DATE	REVISION DESCRIPTION:

Boulder County

BOULDER COUNTY TRANSPORTATION DEPARTMENT
ENGINEERING DIVISION

AECOM

DESIGNED:	CAD:	CHECKED:	DATE:
JTS	JTS	MES	06/11/2015

CEDAR BROOK
TYPICAL SECTIONS

PROJECT NO: ????? | SHEET NO: 2

rodriguezjl 7/23/2015 10:55:24 AM L:\0048\900-CAD\02-SHEETS\C\BOCD-Cedar Brook\BOCD-CedarBrook-TYP.dgn

STA 100+00.00
POB LINDEN DR
N = 261505.13
E = 55465.49

N77° 20'00"W
81.15'

STA 101+62.00
BEGIN RECONSTRUCTION

STA 101+52.79, 43.80' LT
REQ'D END ANCHORAGE TYPE 3K

STA 101+62.78, 16.03' LT
REQ'D TRANSITION TYPE 3J
WITH 17' RADIUS
BEGIN GUARDRAIL TYPE 3
REQ'D 87.5 LF

John J and Victoria Y Orlowski
1596 Linden Drive
Rec. No. R0034676

Mark E and Mary Johnson
62 N Cedar Brook Rd
Rec. No. R0034876
2 owners listed seperately

STA 202+50.00
POE CEDAR BROOK DR
N = 261619.47
E = 55876.79

STA 201+72.00
END RECONSTRUCTION

STA 201+51.37, 14.00' LT
END GUARDRAIL TYPE 3
REQ'D END ANCHORAGE
(NONFLARED)

N27° 21'00"E
22.96'

N. CEDAR BROOK RD.

60' ROW
APPROXIMATE

PT 202+27.04

SEE 60" PIPE
LINDEN SHEET

PERMANENT
EASEMENT

TEMPORARY
EASEMENT

TWOMILE CANYON CREEK

PROPOSED EASEMENT

PC 100+81.15

101+00

PCC 101+66.30

102+00

David R Foster
1002 Oro Court
Rec. No. R0108246

SEE CBC
LINDEN SHEET

SEE CBC CEDAR
BROOK SHEET

CEDAR-1

202+00

STA 201+57.69, 15.00' RT
END GUARDRAIL TYPE 3
REQ'D END ANCHORAGE
(NONFLARED)

LINDEN-1

LINDEN-2

LINDEN DR

STA 102+41.00
END RECONSTRUCTION

STA 102+45.00, 16.00' LT
END GUARDRAIL TYPE 3
REQ'D END ANCHORAGE (FLARED)

PT 102+95.64

103+00

PERMANENT EASEMENT

STA 200+70.00
BEGIN RECONSTRUCTION

TWOMILE CANYON CREEK

201+00

STA 201+08.24, 15.00' RT
REQ'D END ANCHORAGE (FLARED)
BEGIN GUARDRAIL TYPE 3
REQ'D 50.0 LF

PC 200+47.71

PERMANENT EASEMENT

Michael D Aisner
60 N Cedar Brook Rd
Rec. No. R0034880

S34° 57'39"E
47.71'

S36° 38'13"E
66.66' OH

TO BOULDER

LINDEN-3

STA 200+00.00
POB CEDAR BROOK DR
N = 261406.63
E = 55746.19

PC 103+62.30

STA 104+00.00
POE LINDEN DR
N = 261349.05
E = 55788.75

104+00

Ⓐ STA 100+88.74, 15.00' RT
REQ'D END ANCHORAGE (FLARED)
BEGIN GUARDRAIL TYPE 3
REQ'D 50.0 LF

Ⓑ STA 101+45.26, 15.00' RT
REQ'D TRANSITION TYPE 3J
WITH 35' RADIUS
END GUARDRAIL TYPE 3

Ⓒ STA 101+87.16, 34.07' RT
BEGIN GUARDRAIL TYPE 3
REQ'D 12.5 LF

Ⓓ STA 101+95.21, 44.54' RT
END GUARDRAIL TYPE 3
REQ'D END ANCHORAGE TYPE 3K

Ⓔ STA 201+00.84, 14.00' LT
REQ'D END ANCHORAGE (FLARED)
BEGIN GUARDRAIL TYPE 3
REQ'D 50.0 LF

LEGEND

- RIPRAP
- BOULDERS
- SOIL RIPRAP

LINDEN-1 CURVE DATA
PI STA 10125.31
N = 261532.60
E = 55587.76
Δ = 37° 31'35" RT
L = 85.14'
T = 44.16
R = 130.00'
MDS = 20 MPH
e = EX

LINDEN-2 CURVE DATA
PI STA 102+32.34
N = 261486.28
E = 55687.75
Δ = 28° 30'12" RT
L = 129.34'
T = 66.04
R = 260.00'
MDS = 25 MPH
e = 3.6%

LINDEN-3 CURVE DATA
PI STA 103+81.15
N = 261364.67
E = 55778.18
Δ = 02° 32'28" RT
L = 37.70'
T = 18.85
R = 850.00'
MDS > 25 MPH
e = EX

CEDAR-1 CURVE DATA
PI STA 201+37.51
N = 261519.32
E = 55824.98
Δ = 07° 36'39" LT
L = 179.33'
T = 89.80
R = 1350.00'
MDS > 20 MPH
e = NC

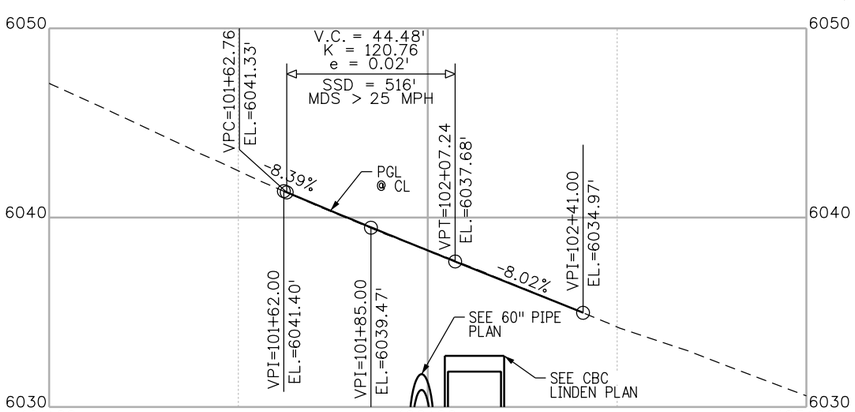

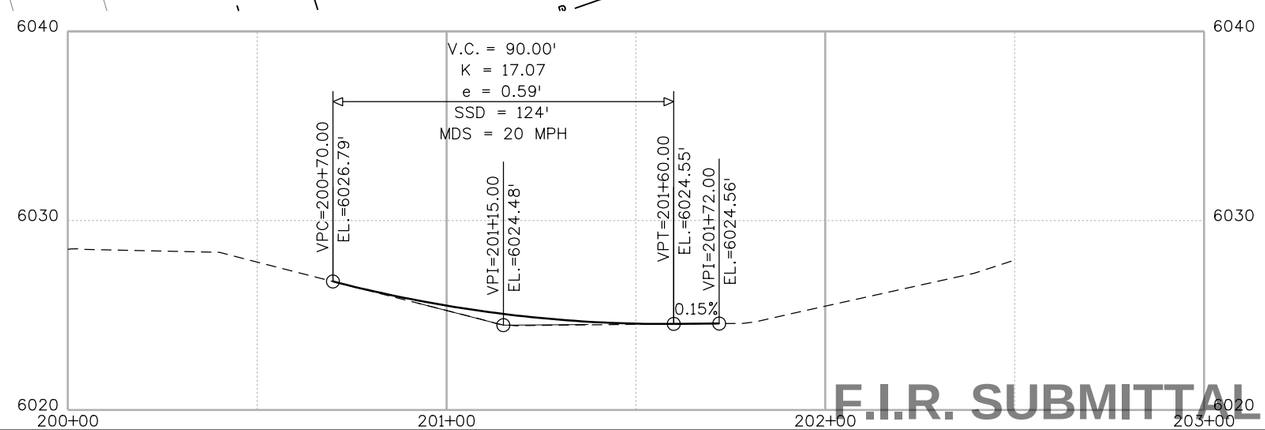

F.I.R. SUBMITTAL

0' 20' 40' 80'

N

F.I.R.

CALL UTILITY NOTIFICATION CENTER OF COLORADO
811
CALL 2-BUSINESS DAYS IN ADVANCE BEFORE YOU DIG, GRADE, OR EXCAVATE FOR THE MARKING OF UNDERGROUND MEMBER UTILITIES

REVISIONS:	NO.	DATE	REVISION DESCRIPTION:

Boulder County

BOULDER COUNTY TRANSPORTATION DEPARTMENT
ENGINEERING DIVISION

AECOM

DESIGNED:	CAD:	CHECKED:	DATE:
JTS	JTS	MES	06/11/2015

CEDAR BROOK
ROAD PLAN AND PROFILE

PROJECT NO: ?????
SHEET NO: 3

rodriguezj1 7/23/2015 10:55:26 AM L:\0048\900-CAD\02-SHEETS\C\BDCO-Cedar Brook\BDCO-CedarBrook-RDPnP.dgn

HYDRAULIC DATA

DA = 1.40 MI²
Q100 = 710 CFS
HW = 6033.39
Q10 = 210 CFS (DESIGN)
DHW = 6029.36
AHW = 6039.01

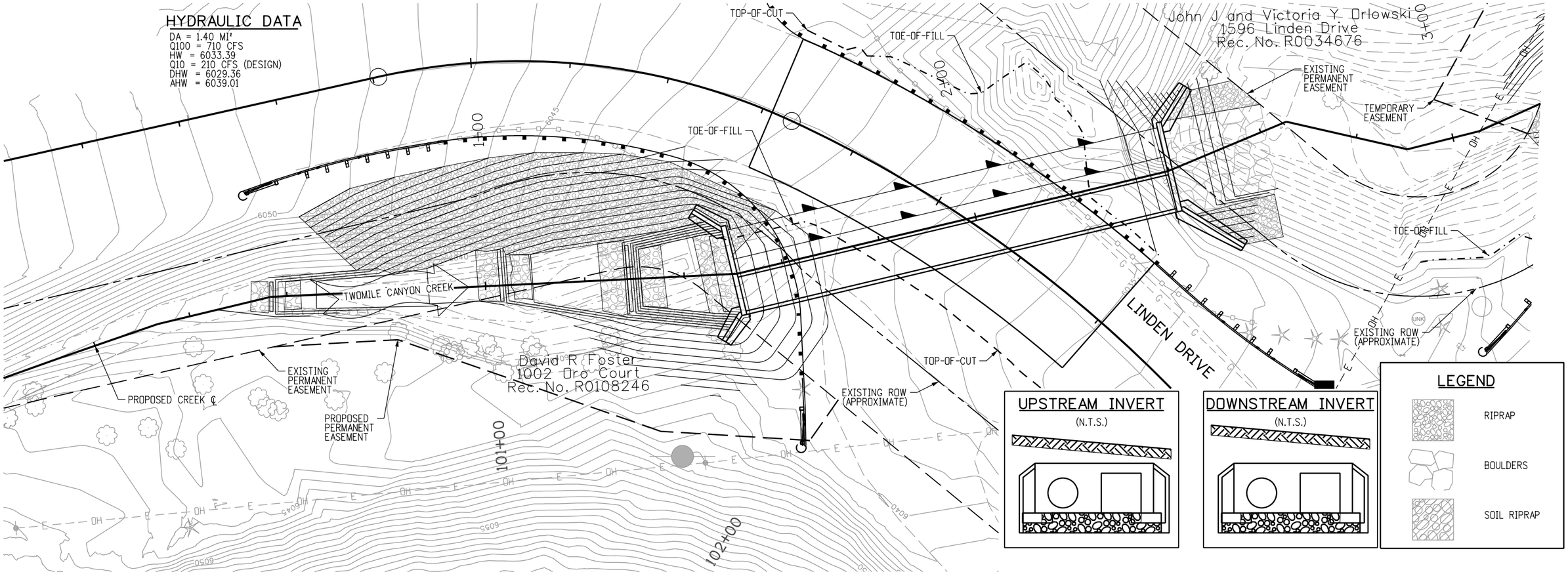

UPSTREAM INVERT

(N.T.S.)

DOWNSTREAM INVERT

(N.T.S.)

LEGEND

- RIPRAP
- BOULDERS
- SOIL RIPRAP

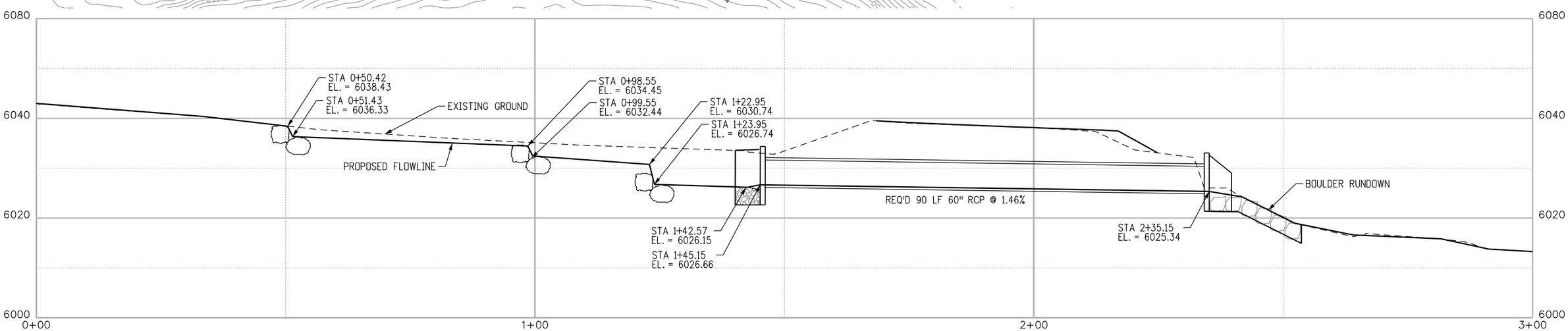

F.I.R. SUBMITTAL

0' 50' 100' 200'

N

F.I.R.

CALL UTILITY NOTIFICATION CENTER OF COLORADO
811
CALL 2-BUSINESS DAYS IN ADVANCE BEFORE YOU DIG, GRADE, OR EXCAVATE FOR THE MARKING OF UNDERGROUND MEMBER UTILITIES

REVISIONS:	NO.	DATE	REVISION DESCRIPTION:

Boulder County

BOULDER COUNTY TRANSPORTATION DEPARTMENT
ENGINEERING DIVISION

AECOM

DESIGNED:	CAD:	CHECKED:	DATE:
JTS	JTS	MES	06/11/2015

CEDAR BROOK
60" PIPE LINDEN

PROJECT NO: ?????
SHEET NO: 4

rodriguezjl 7/23/2015 10:55:32 AM L:\0048\900-CAD\02-SHEETS\S\BOCO-CedarBrook-Linden-60in-20Sc-GL.dgn

LEGEND

- RIPRAP
- BOULDERS
- SOIL RIPRAP

HYDRAULIC DATA

DA = 1.40 MI²
Q100 = 710 CFS
HW = 6033.39
Q10 = 210 CFS (DESIGN)
DHW = 6029.36
AHW = 6039.01

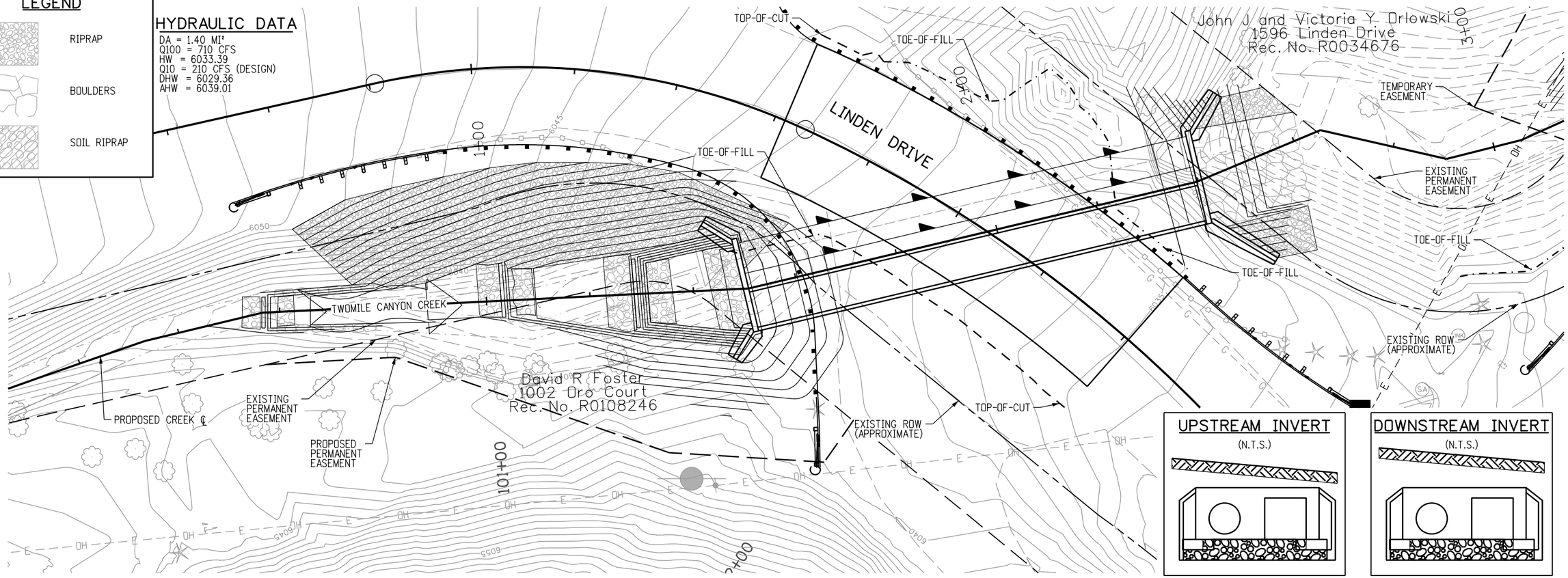

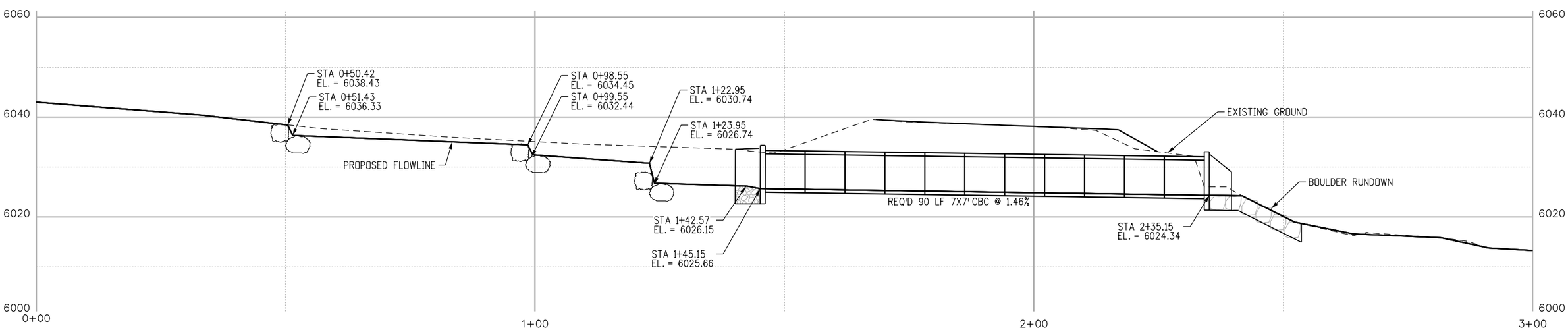

F.I.R. SUBMITTAL

0' 10' 20' 200'

N

F.I.R.

CALL UTILITY NOTIFICATION CENTER OF COLORADO
811
CALL 2-BUSINESS DAYS IN ADVANCE BEFORE YOU DIG, GRADE, OR EXCAVATE FOR THE MARKING OF UNDERGROUND MEMBER UTILITIES

REVISIONS:	NO.	DATE	REVISION DESCRIPTION:

Boulder County

BOULDER COUNTY TRANSPORTATION DEPARTMENT
ENGINEERING DIVISION

AECOM

DESIGNED:	CAD:	CHECKED:	DATE:
JTS	JTS	MES	06/11/2015

CEDAR BROOK
CBC LINDEN

PROJECT NO: ?????

SHEET NO: 5

rodriguezjl 7/23/2015 10:55:34 AM L:\0048\900-CAD\02-SHEETS\S\BOCO-CedarBrook-Linden-7x7-20Sc-GL.dgn

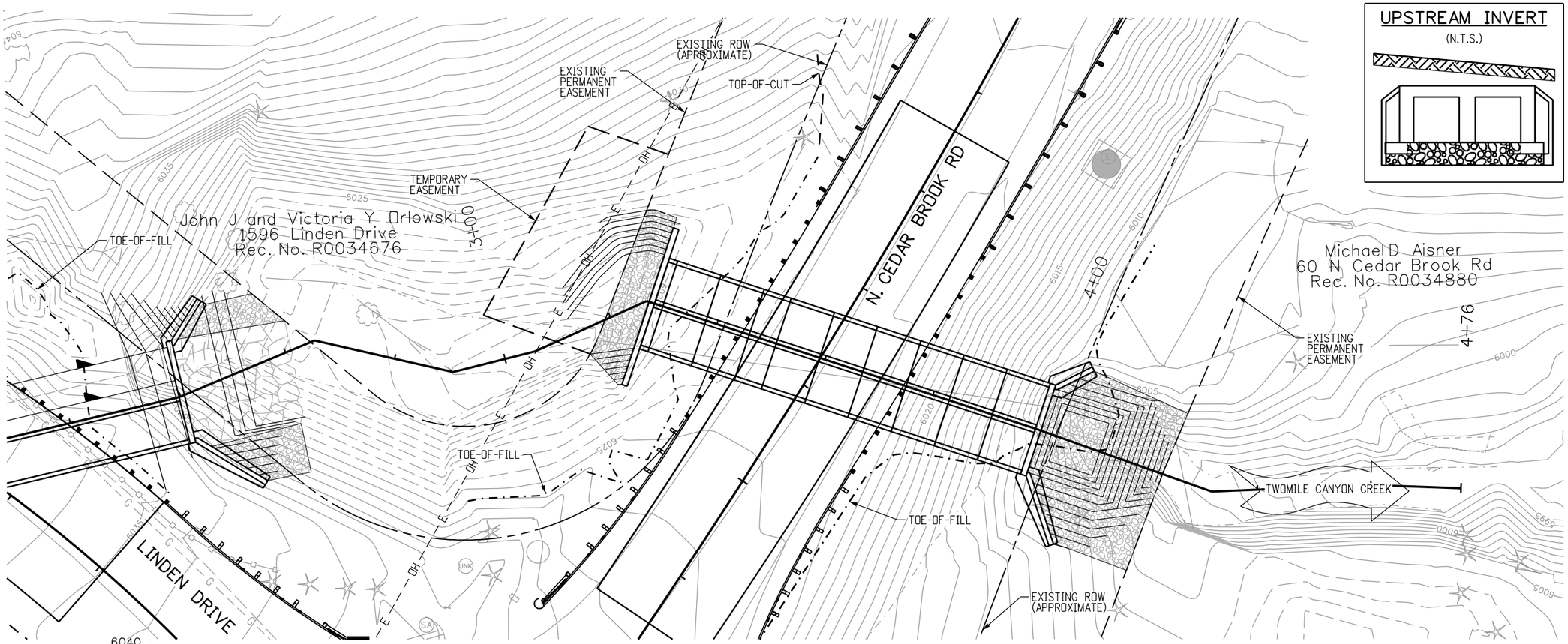

UPSTREAM INVERT

(N.T.S.)

DOWNSTREAM INVERT

(N.T.S.)

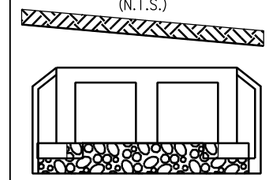

HYDRAULIC DATA

DA = 1.40 MI²
Q100 = 710 CFS
HW = 6021.12
Q10 = 210 CFS (DESIGN)
DHW = 6016.53
AHW = 6023.71

LEGEND

- RIPRAP
- BOULDERS
- SOIL RIPRAP

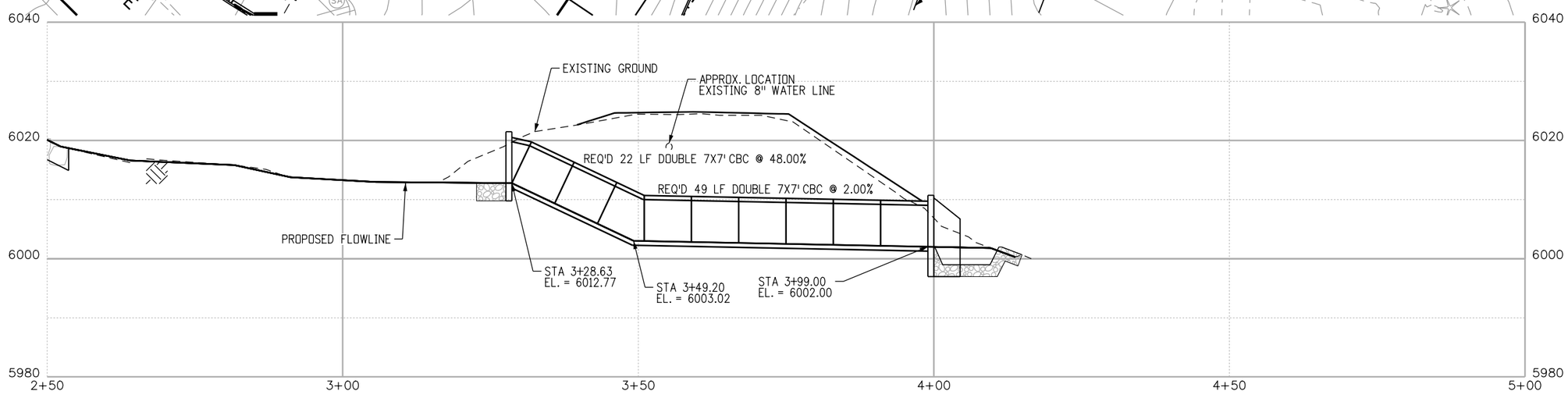

F.I.R. SUBMITTAL

0' 10' 20' 40'

N

F.I.R.

CALL UTILITY NOTIFICATION CENTER OF COLORADO
811
CALL 2-BUSINESS DAYS IN ADVANCE BEFORE YOU DIG, GRADE, OR EXCAVATE FOR THE MARKING OF UNDERGROUND MEMBER UTILITIES

REVISIONS:	NO.	DATE	REVISION DESCRIPTION:

Boulder County

BOULDER COUNTY TRANSPORTATION DEPARTMENT
ENGINEERING DIVISION

AECOM

DESIGNED:	CAD:	CHECKED:	DATE:
JTS	JTS	MES	06/11/2015

CEDAR BROOK
CBC CEDAR BROOK

PROJECT NO: ?????
SHEET NO: 6

rodriguezj1 7/23/2015 10:55:36 AM L:\0048\900-CAD\02-SHEETS\S\BDCO-CedarBrook-20Sc-GL.dgn