GENERAL NOTES

ALL CONSTRUCTION SHALL BE IN ACCORDANCE WITH THE COLORADO DEPARTMENT OF TRANSPORTATION 2011 STANDARD SPECIFICATIONS FOR ROAD AND BRIDGE CONSTRUCTION AND THE PROJECT SPECIAL PROVISIONS.

STATIONS, ELEVATIONS, AND DIMENSIONS CONTAINED IN THESE PLANS ARE CALCULATED FROM A RECENT FIELD SURVEY. THE CONTRACTOR SHALL VERIFY ALL DEPENDENT DIMENSIONS IN THE FIELD BEFORE ORDERING OR FABRICATING ANY MATERIAL.

ALL LONGITUDINAL AND TRAVERSE DIMENSIONS ARE MEASURED HORIZONTALLY AND DO NOT INCLUDE ANY CORRECTIONS FOR GRADE.

THE INFORMATION SHOWN ON THE PLANS CONCERNING THE TYPE OF LOCATION OF UNDERGROUND UTILITIES IS NOT GUARANTEED TO BE ACCURATE OR ALL INCLUSIVE. THE CONTRACTOR IS RESPONSIBLE FOR MAKING HIS OWN DETERMINATION AS TO THE TYPE AND LOCATION OF UNDERGROUND UTILITIES AS MAY BE NECESSARY TO AVOID DAMAGE THERETO. THE CONTRACTOR SHALL CONTACT THE UTILITY NOTIFICATION CENTER OF COLORADO AT 811 (1-800-922-1987) AT LEAST 3 DAYS (2 DAYS NOT INCLUDING THE DAY OF NOTIFICATION) PRIOR TO ANY EXCAVATION OR OTHER EARTHWORK.

THE CONTRACTOR SHALL BE RESPONSIBLE FOR THE STABILITY OF THE STRUCTURE DURING CONSTRUCTION.

A CUT STONE VENEER FINISH IS REQUIRED, AS SHOWN ON THE PLANS, ON EXPOSED CONCRETE SURFACES. THESE FINISHES ARE TO BE SELECTED FROM TEST PANELS PROVIDED BY THE CONTRACTOR.

ACRONYMS AND ABBREVIATIONS CONFORM TO CDOT STANDARD M-100-2 UNLESS OTHERWISE NOTED.

AH.	= AHEAD	B.F.	= BACK FACE
BK.	= BACK	F.F.	= FRONT FACE
L	= ANGLE	PL	= PLATE

XX
WXX

SECTION OR DETAIL IDENTIFICATION

CROSS REFERENCE DRAWING NUMBER
(IF "-", REFERENCE IS TO SAME SHEET)

WALL DESCRIPTIONS

RETAINING WALL 1:
CANTILEVER NON-GRAVITY WALL (SOLDIER PILE WALL)
FOURMILE CANYON DR. RT.
RETAINING WALL 3:
CANTILEVER NON-GRAVITY WALL (SOLDIER PILE WALL)
FOURMILE CANYON DR. RT.
RETAINING WALL 4:
CANTILEVER NON-GRAVITY WALL (CAISSON WALL)
FOURMILE CANYON DR. RT.
RETAINING WALL 5:
CANTILEVER NON-GRAVITY WALL (CAISSON WALL)
FOURMILE CANYON DR. RT.
RETAINING WALL 6:
CANTILEVER NON-GRAVITY WALL (CAISSON WALL)
FOURMILE CANYON DR. RT.
RETAINING WALL 9
CANTILEVER NON-GRAVITY WALL (SOLDIER PILE WALL)
FOURMILE CANYON DR. RT.
RETAINING WALL 10:
ANCHORED WALL (SOIL NAIL WALL)
FOURMILE CANYON DR. RT.
RETAINING WALL 15:
CANTILEVER NON-GRAVITY WALL (CAISSON WALL)
FOURMILE CANYON DR. RT.
RETAINING WALL 16:
CANTILEVER NON-GRAVITY WALL (CAISSON WALL)
FOURMILE CANYON DR. RT.
RETAINING WALL 18:
CANTILEVER NON-GRAVITY WALL (CAISSON WALL)
FOURMILE CANYON DR. RT.

REINFORCED CONCRETE NOTES

EXPOSED CONCRETE CORNERS SHALL BE CHAMFERED 3/4 INCH, UNLESS NOTED OTHERWISE.

EXPANSION JOINT MATERIAL SHALL MEET AASHTO SPECIFICATION M213.

ANY CONSTRUCTION JOINTS NOT SHOWN ON THE PLANS MAY BE CONSTRUCTED ONLY IF APPROVED IN WRITING BY THE ENGINEER.

ROUGHENED CONSTRUCTION JOINTS REQUIRE THE CONCRETE SURFACE TO BE EVENLY ROUGHENED TO A MINIMUM AMPLITUDE OF 1/4 INCH.

CONSTRUCTION JOINTS SHALL BE THOROUGHLY CLEANED BEFORE FRESH CONCRETE IS PLACED.

GRADE 60 REINFORCING STEEL IS REQUIRED.

ALL REINFORCING SHALL BE EPOXY COATED UNLESS OTHERWISE NOTED. Ⓝ DENOTES NON-COATED REINFORCING STEEL.

THE FOLLOWING TABLE GIVES THE MINIMUM LAP SPLICE LENGTH FOR REINFORCING BARS PLACED IN ACCORDANCE WITH SUBSECTION 602.06. MINIMUM LAP SPLICE LENGTHS SUPERSEDING THOSE SHOWN BELOW SHALL BE AS SHOWN IN THE PLANS.

REINFORCING BAR SIZE	#4	#5	#6	#7	#8	#9	#10	#11
3 BAR DIAMETERS (REFERENCE DIMENSION)	1 1/2"	1 7/8"	2 1/4"	2 5/8"	3"	3 3/8"	3 7/8"	4 1/4"
6 BAR DIAMETERS (REFERENCE DIMENSION)	3"	3 3/4"	4 1/2"	5 1/4"	6"	6 3/4"	7 5/8"	8 1/2"

EPOXY COATED REINFORCING BAR SIZE	#4	#5	#6	#7	#8	#9	#10	#11
CLASS B SPLICE (STAGGERED) LENGTH FOR f'c = 4,500 PSI	1'-7"	2'-0"	2'-5"	2'-10"	3'-8"	4'-8"	5'-11"	7'-3"
CLASS C SPLICE (UNSTAGGERED) LENGTH FOR f'c = 4,500 PSI	2'-1"	2'-7"	3'-1"	3'-8"	4'-9"	6'-1"	7'-8"	9'-5"

NON-COATED REINFORCING BAR SIZE	#4 Ⓝ	#5 Ⓝ	#6 Ⓝ	#7 Ⓝ	#8 Ⓝ	#9 Ⓝ	#10 Ⓝ	#11 Ⓝ
CLASS B SPLICE (STAGGERED) LENGTH FOR f'c = 4,500 PSI	1'-4"	1'-8"	2'-0"	2'-4"	3'-1"	3'-10"	4'-11"	6'-0"
CLASS B SPLICE (UNSTAGGERED) LENGTH FOR f'c = 4,500 PSI	1'-9"	2'-2"	2'-7"	3'-1"	4'-0"	5'-1"	6'-5"	7'-10"

THESE SPLICE LENGTHS MAY BE DECREASED BY 20% IF BARS ARE NOT SPACED LESS THAN 6 INCHES ON CENTER AND HAVE 3 INCHES OR MORE OF COVER PROVIDED IN THE DIRECTION OF THE SPACING.

THESE SPLICE LENGTHS MAY BE DECREASED BY 25% IF BARS ARE ENCLOSED WITHIN A SPIRAL COMPOSED OF 1/4" MINIMUM. DIAMETER AND SPACED AT NO MORE THAN A 4 INCH PITCH.

THESE SPLICE LENGTHS SHALL BE INCREASED BY 20% FOR 3 BAR BUNDLES AND 33% FOR 4 BAR BUNDLES.

WHEN CONTRACTOR ELECTS TO SUBSTITUTE EPOXY COATED REINFORCEMENT FOR NON-COATED REINFORCING BARS, THE MINIMUM LAP SPLICE SHALL BE FOR EPOXY COATED REINFORCEMENT.

INDEX OF DRAWINGS

217 RETAINING WALLS GENERAL INFORMATION (1 OF 3)
218 RETAINING WALLS GENERAL INFORMATION (2 OF 3)
219 RETAINING WALLS GENERAL INFORMATION (3 OF 3)
220 GENERAL LAYOUT RETAINING WALL 1 (1 OF 3)
221 GENERAL LAYOUT RETAINING WALL 1 (2 OF 3)
222 GENERAL LAYOUT RETAINING WALL 1 (3 OF 3)
223 GENERAL LAYOUT RETAINING WALL 3 (1 OF 3)
224 GENERAL LAYOUT RETAINING WALL 3 (2 OF 3)
225 GENERAL LAYOUT RETAINING WALL 3 (3 OF 3)
226 GENERAL LAYOUT RETAINING WALL 4 (1 OF 3)
227 GENERAL LAYOUT RETAINING WALL 4 (2 OF 3)
228 GENERAL LAYOUT RETAINING WALL 4 (3 OF 3)
229 GENERAL LAYOUT RETAINING WALL 5 (1 OF 3)
230 GENERAL LAYOUT RETAINING WALL 5 (2 OF 3)
231 GENERAL LAYOUT RETAINING WALL 5 (3 OF 3)
232 GENERAL LAYOUT RETAINING WALL 6 (1 OF 3)
233 GENERAL LAYOUT RETAINING WALL 6 (2 OF 3)
234 GENERAL LAYOUT RETAINING WALL 6 (3 OF 3)
235 GENERAL LAYOUT RETAINING WALL 9 (1 OF 3)
236 GENERAL LAYOUT RETAINING WALL 9 (2 OF 3)
237 GENERAL LAYOUT RETAINING WALL 9 (3 OF 3)
238 GENERAL LAYOUT RETAINING WALL 10 (1 OF 3)
239 GENERAL LAYOUT RETAINING WALL 10 (2 OF 3)
240 GENERAL LAYOUT RETAINING WALL 10 (3 OF 3)
241 GENERAL LAYOUT RETAINING WALL 15 (1 OF 3)
242 GENERAL LAYOUT RETAINING WALL 15 (2 OF 3)
243 GENERAL LAYOUT RETAINING WALL 15 (3 OF 3)
244 GENERAL LAYOUT RETAINING WALL 16 (1 OF 3)
245 GENERAL LAYOUT RETAINING WALL 16 (2 OF 3)
246 GENERAL LAYOUT RETAINING WALL 16 (3 OF 3)
247 GENERAL LAYOUT RETAINING WALL 18 (1 OF 3)
248 GENERAL LAYOUT RETAINING WALL 18 (2 OF 3)
249 GENERAL LAYOUT RETAINING WALL 18 (3 OF 3)
250 CUT STONE VENEER DETAILS (1 OF 2)
251 CUT STONE VENEER DETAILS (2 OF 2)
252 SOLDIER PILE WALL DETAILS (1 OF 2)
253 SOLDIER PILE WALL DETAILS (2 OF 2)
254 SOLDIER PILE WALL EXCAVATION & BACKFILL
255 SOIL NAIL WALL EXCAVATION & BACKFILL
256 CAISSON WALL DETAILS
257 SOIL NAIL LOCATION RETAINING WALL 10
258 SOIL NAIL WALL TYPICAL SECTION
259 SOIL NAIL WALL GENERAL NOTES
260 SOIL NAIL WALL DETAILS
261 SOIL NAIL WALL TESTING AND CONSTRUCTION

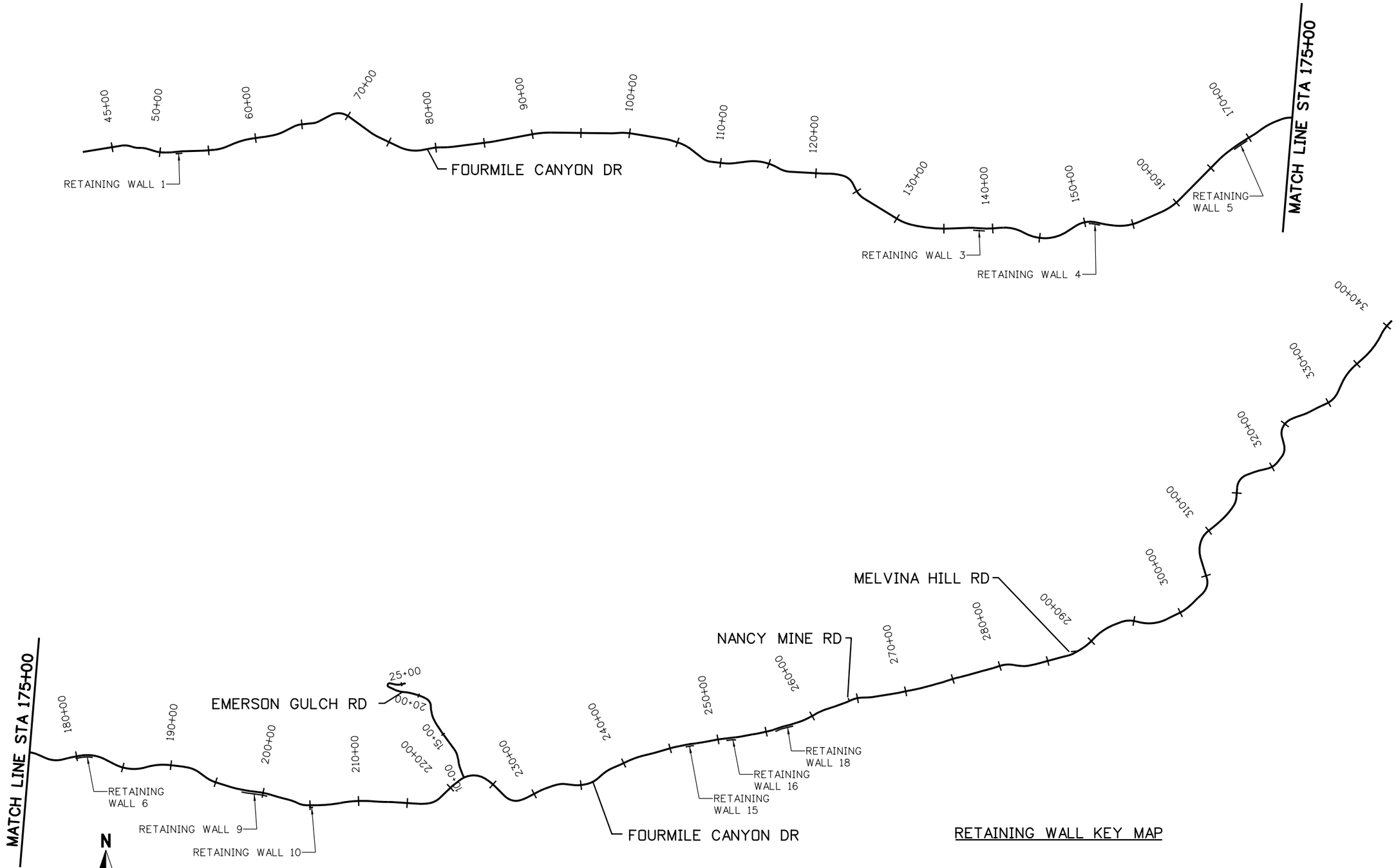

RETAINING WALL KEY MAP

90% SET

CALL UTILITY NOTIFICATION CENTER OF COLORADO
CALL 2-BUSINESS DAYS IN ADVANCE BEFORE YOU DIG, GRADE, OR EXCAVATE FOR THE MARKING OF UNDERGROUND MEMBER UTILITIES

REVISIONS:	NO.	DATE	REVISION DESCRIPTION:

BOULDER COUNTY TRANSPORTATION DEPARTMENT
ENGINEERING DIVISION

Michael Baker INTERNATIONAL

DESIGNED:	CAD:	CHECKED:	DATE:
MSC	DRH	DNB	03/25/16

UPPER FOURMILE CANYON DRIVE
RETAINING WALLS
GENERAL INFORMATION (2 OF 3)

PROJECT NO: 4041.SEPT12C37 | SHEET NO: 218

Daniel.Hawk 1:52:48 PM pw:\\DCPWAPP1.bkr.mbakercorp.com:pwprod\Documents\Projects\Lakewood_Office\Boulder_County_Emergency_Transportation\TO1\08_Sheet_Files\06_Structures\DGN\138366_Wall_02.dgn

SUMMARY OF QUANTITIES

ITEM	DESCRIPTION	UNIT	RETAINING WALL 1	RETAINING WALL 3	RETAINING WALL 4	RETAINING WALL 5	RETAINING WALL 6	RETAINING WALL 9	RETAINING WALL 10	RETAINING WALL 15	RETAINING WALL 16	RETAINING WALL 18	TOTALS
206	STRUCTURE EXCAVATION	CY	43	75				219	36				373
206	STRUCTURE BACKFILL (CLASS 2)	CY	8	13				30	5				56
211	DEWATERING	LS											1
503	DRILLED CAISSON (24 INCH)	LF	180	272	815	1,177	1,364	630		881	939	1,804	8,062
504	GROUND NAIL	EA							17				17
509	STRUCTURAL STEEL	LB	15,925	24,310	37,489	52,699	61,913	60,320		40,300	42,965	82,014	417,935
601	CONCRETE CLASS D (WALL)	CY	15.2	25.7				75.4	14.5				130.8
601	CUT STONE VENEER	SF	444	748				2,255	387				3,834
602	REINFORCING STEEL	LB	2,131	3,610				10,067	464				16,272

90% SET

CALL UTILITY NOTIFICATION CENTER OF COLORADO
811
CALL 2-BUSINESS DAYS IN ADVANCE BEFORE YOU DIG, GRADE, OR EXCAVATE FOR THE MARKING OF UNDERGROUND MEMBER UTILITIES

REVISIONS:	NO.	DATE	REVISION DESCRIPTION:

Boulder County

Michael Baker INTERNATIONAL

BOULDER COUNTY TRANSPORTATION DEPARTMENT
ENGINEERING DIVISION

DESIGNED:	CAD:	CHECKED:	DATE:
MSC	DRH	DNB	03/25/16

UPPER FOURMILE CANYON DRIVE
RETAINING WALLS
GENERAL INFORMATION (3 OF 3)

PROJECT NO: 4041.SEPT12C37 | SHEET NO: 219

Daniel.Hawk 1:53:18 PM pw:\\DCPWAPP1.bkr.mbakercorp.com:pwprod\Documents\Projects\Lakewood_Office\Boulder_County_Emergency_Transportation\T01\08_Sheet_Files\06_Structures\DGN\138366_Wall_03.dgn

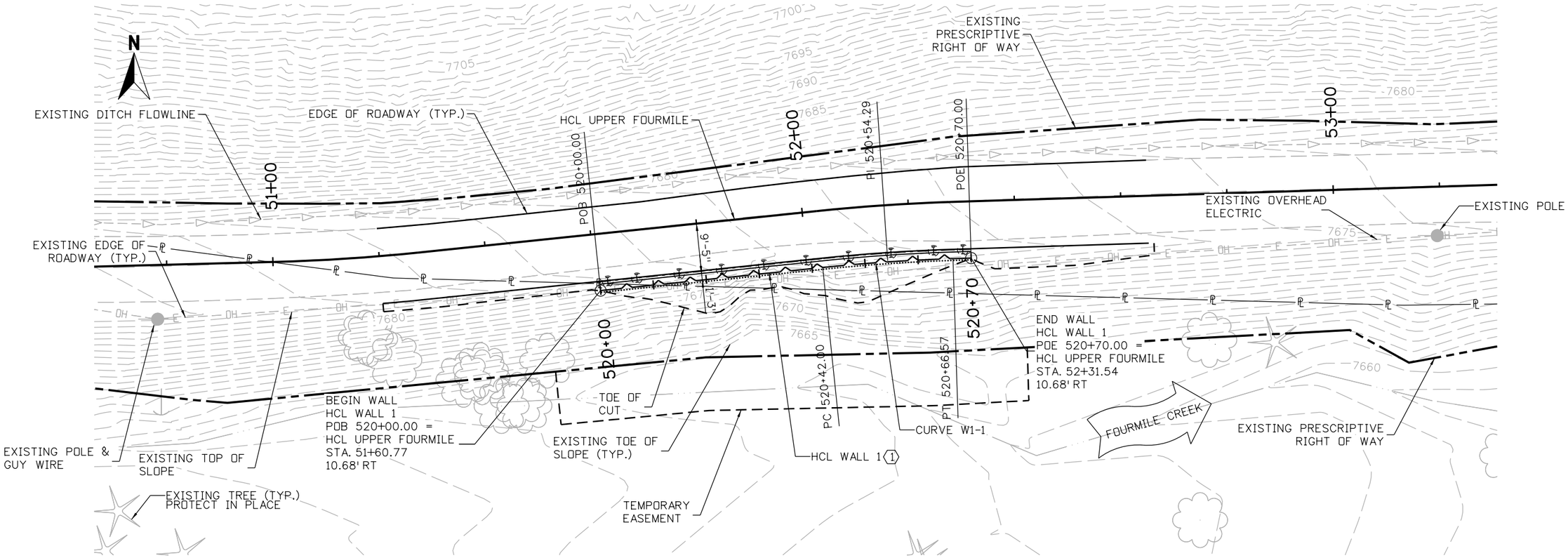

PLAN

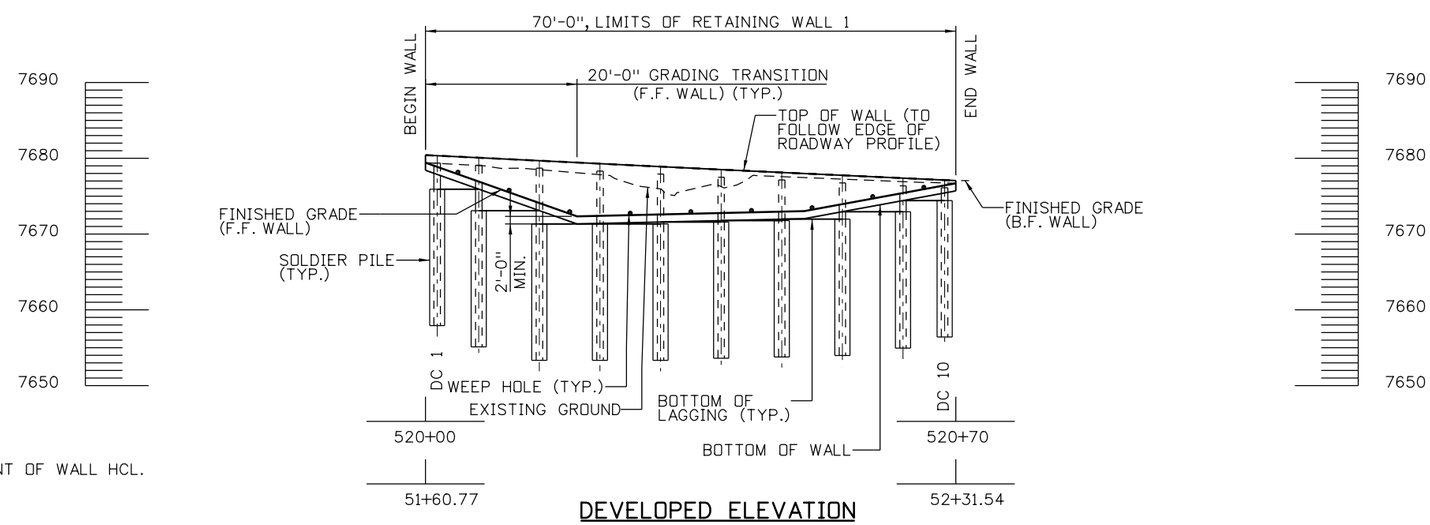

DEVELOPED ELEVATION

TAKEN AT HCL WALL

NOTES:

1. FOR FINISHED GRADING, REFER TO DRAINAGE PLANS.
2. FOR ROADWAY ALIGNMENT DATA, REFER TO ROADWAY PLANS.
3. FOR UTILITY INFORMATION, REFER TO UTILITY PLANS.

KEYNOTES:

(1) FINISHED FACE EXTENDS IN FRONT OF WALL HCL.

10 0 10 20 FT
HORIZONTAL SCALE: 1"=20'

90% SET

CALL UTILITY NOTIFICATION CENTER OF COLORADO
811
CALL 2-BUSINESS DAYS IN ADVANCE BEFORE YOU DIG, GRADE, OR EXCAVATE FOR THE MARKING OF UNDERGROUND MEMBER UTILITIES

REVISIONS:	NO.	DATE	REVISION DESCRIPTION:

BOULDER COUNTY TRANSPORTATION DEPARTMENT
ENGINEERING DIVISION
Boulder County
Michael Baker INTERNATIONAL

DESIGNED:	CAD:	CHECKED:	DATE:
MSC	DRH	DNB	03/25/16

UPPER FOURMILE CANYON DRIVE
GENERAL LAYOUT
RETAINING WALL 1 (1 OF 3)

PROJECT NO: 4041.SEPT12C37 | SHEET NO: 220

Daniel.Hawk 4:06:44 PM pw:\\DCPWAPP1bkr.mbakercorp.com:pwprod\Documents\Projects\Lakewood_Office\Boulder_County_Emergency_Transportation\TOI\08_Sheet_Files\06_Structures\DGN\138366_Wall_04.dgn

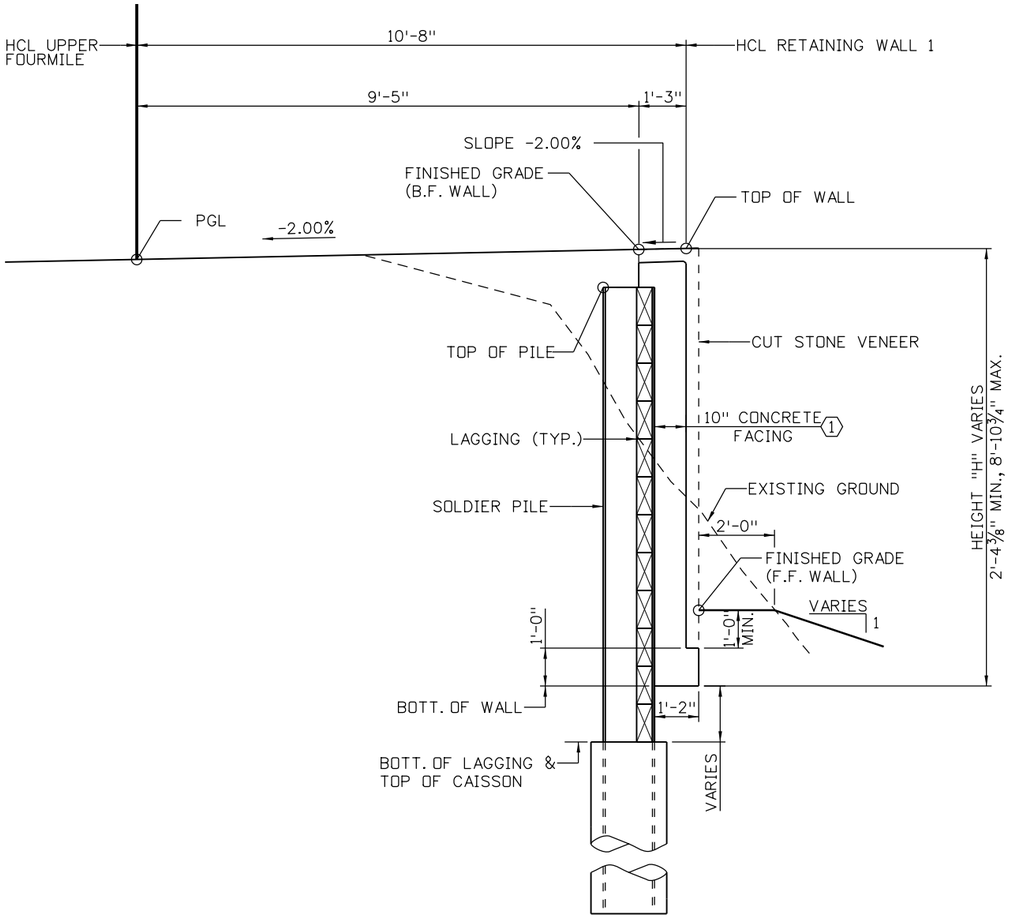

TYPICAL SECTION

LOOKING AHEAD STATION ALONG HCL WALL 1

DESIGN DATA:

AASHTO LRFD BRIDGE DESIGN SPECIFICATIONS, SEVENTH EDITION WITH INTERIMS THROUGH 2015
DESIGN METHOD: LOAD AND RESISTANCE FACTOR DESIGN (LRFD)
LIVE LOAD: HL-93 (DESIGN TRUCK OR DESIGN TANDEM, AND DESIGN LANE LOAD)

SEISMIC ZONE 1

REINFORCED CONCRETE:		
	CLASS D CONCRETE:	f'c=4,500 PSI
	REINFORCING STEEL:	fy=60,000 PSI
	SEVERITY OF SULFATE EXPOSURE:	CLASS 0
CAISSON CONCRETE:		
	CLASS BZ CONCRETE:	f'c=4,000 PSI
	SEVERITY OF SULFATE EXPOSURE:	CLASS 0
CAISSON CASING:		
	AASHTO M270 (ASTM A500 GRADE B) GRADE 42:	fy=42,000 PSI
SOIL PROPERTIES:		
ABOVE BOTTOM OF WALL:		
	SOIL UNIT WEIGHT:	120 PCF
	SOIL FRICTION ANGLE:	32°
	COHESION:	75 PSF
	ACTIVE HORIZ. PRESSURE COEFFICIENT:	0.238
BELOW BOTTOM OF WALL:		
	SOIL UNIT WEIGHT:	130 PCF
	SOIL FRICTION ANGLE:	35°
	COHESION:	75 PSF
	ACTIVE HORIZ. PRESSURE COEFFICIENT:	0.271
	PASSIVE HORIZ. PRESSURE COEFFICIENT:	1.29

NOTES:

1. FOR AESTHETIC DETAILS, REFER TO CUT STONE VENEER SHEETS.
2. ROAD MAY BE CLOSED TO THRU-TRAFFIC DURING CONSTRUCTION, EXCEPT ACCESS TO ALL PRIVATE RESIDENCES SHALL REMAIN OPEN AT ALL TIMES. REFER TO PROJECT SPECIAL PROVISIONS FOR ADDITIONAL INFORMATION.
3. WALL SHALL BE CONSTRUCTED FROM THE TOP-DOWN. THE CONTRACTOR SHALL NOT DISTURB THE EXISTING GROUND CONDITIONS. EXCEPT AS NECESSARY TO INSTALL FOUNDATIONS AND COMPLETE FINISHED GRADING.
4. FOR ADDITIONAL WALL DETAILS, REFER TO SOLDIER PILE WALL DETAIL SHEETS.
5. GEOTECHNICAL INFORMATION AND RECOMMENDATIONS CAN BE FOUND IN THE FINAL GEOTECHNICAL INVESTIGATION REPORT, UPPER FOURMILE DRIVE, JANUARY, 2016.

KEYNOTES:

1. NOMINAL WALL THICKNESS SHOWN TO STRUCTURAL WALL FACING. DOES NOT INCLUDE CUT STONE VENEER ALLOWANCE TO F.F. WALL.

90% SET

CALL UTILITY NOTIFICATION CENTER OF COLORADO
811
CALL 2-BUSINESS DAYS IN ADVANCE BEFORE YOU DIG, GRADE, OR EXCAVATE FOR THE MARKING OF UNDERGROUND MEMBER UTILITIES

REVISIONS: NO.	DATE	REVISION DESCRIPTION:

Boulder County
BOULDER COUNTY TRANSPORTATION DEPARTMENT
ENGINEERING DIVISION
Michael Baker INTERNATIONAL

DESIGNED:	CAD:	CHECKED:	DATE:
MSC	DRH	DNB	03/25/16

UPPER FOURMILE CANYON DRIVE
GENERAL LAYOUT
RETAINING WALL 1 (2 OF 3)
PROJECT NO: 4041.SEPT12C37 SHEET NO: 221

Daniel.Hawk 1:54:19 PM pw:\\DCPWAPP1.bkr.mbakercorp.com:pwprod\Documents\Projects\Lakewood_Office\Boulder_County_Emergency_Transportation\T01\08_Sheet_Files\06_Structures\DGN\138366_Wall_05.dgn

WALL 1 HORIZONTAL CONTROL LINE TABLE

CURVE NUMBER	POINT TYPE	STATION	NORTHING	EASTING	BEARING	DISTANCE	RADIUS	LENGTH	CURVE DELTA	CURVE DIRECTION
	POB	520+00.00	256813.18	11261.70						
					N84° 03'16E	42.00 FT.				
	PC	520+42.00	256817.53	11303.47						
W1-1	PI	520+54.29	256818.80	11315.69			339.32 FT.	24.57 FT.	4° 08'55"	RIGHT
	PT	520+66.57	256819.19	11327.98						
					N88° 12'11E	3.43 FT.				
	POE	520+70.00	256819.29	11331.41						

WALL 1 BOTTOM OF WALL TABLE

STATION	ELEVATION	SEGMENT LENGTH	SLOPE
520+00.00	7677.41	20.00 FT.	-35.34 %
520+20.00	7670.34		
520+20.00	7670.34	30.00 FT.	2.30 %
520+50.00	7671.03		
520+50.00	7671.03	20.00 FT.	18.28 %
520+70.00	7674.69		

NOTES:

1. TOP AND BOTTOM OF CAISSONS SHALL BE SET BY THE CONTRACTOR AS REQUIRED FOR LAGGING. SEE SOLDIER PILE WALL DETAILS (1 OF 2) SHEET FOR MINIMUM CAISSON LENGTHS. THE CONTRACTOR SHALL INCLUDE THIS INFORMATION WITH THE WORKING DRAWINGS PROVIDED TO THE ENGINEER.

KEYNOTES:

1. ESTIMATED DEFLECTION = 0.5% "H". ESTIMATED DEFLECTION MAY VARY DEPENDING ON BACKFILL EQUIPMENT AND PROCEDURE, AND SUBSURFACE MATERIAL ENCOUNTERED.

2. SUBSURFACE STRATA UNKNOWN. PILE LENGTHS AND PILE TIP ELEVATIONS ARE BASED ON THE ASSUMPTION THAT BEDROCK WILL NOT BE ENCOUNTERED. IF BEDROCK IS ENCOUNTERED, EMBED CAISSON A MINIMUM OF 5 FEET INTO BEDROCK AND ADJUST THE PILE LENGTH ACCORDINGLY.

WALL 1 DATA TABLE

DRILLED CAISSON NUMBER	NORTHING	EASTING	WALL HCL		UPPER FOURMILE RD. HCL		ESTIMATED TOP OF WALL DEFLECTION (1)	EST. ℄ CAISSON PLACEMENT OFFSET FROM WALL HCL	EXISITNG GROUND ELEVATION AT ℄ CAISSON	TOP OF WALL ELEVATION	BOTTOM OF WALL ELEVATION	WALL HEIGHT ("H")	TOP OF PILE ELEVATION	PILE TIP ELEVATION (2)	PILE LENGTH (2)
			STATION AT ℄ CAISSON	PLAN OFFSET AT ℄ CAISSON	STATION AT ℄ CAISSON	PLAN OFFSET AT ℄ CAISSON									
DC 1	256,814.93	11,263.06	520+01.53	1.60 FT. LT.	51+62.30	9.08 FT. RT.	0.02 FT	1.62 FT. LT.	7679.33	7680.36	7676.87	3.49 FT.	7679.36	7656.36	23.00 FT.
DC 2	256,815.50	11,268.53	520+07.03	1.60 FT. LT.	51+67.80	9.08 FT. RT.	0.03 FT	1.63 FT. LT.	7679.05	7680.09	7674.93	5.16 FT.	7679.09	7654.09	25.00 FT.
DC 3	256,816.33	11,276.48	520+15.03	1.60 FT. LT.	51+75.80	9.08 FT. RT.	0.04 FT	1.64 FT. LT.	7678.49	7679.70	7672.10	7.60 FT.	7678.70	7651.70	27.00 FT.
DC 4	256,817.15	11,284.44	520+23.03	1.60 FT. LT.	51+83.80	9.08 FT. RT.	0.04 FT	1.64 FT. LT.	7677.83	7679.30	7670.41	8.89 FT.	7678.30	7652.30	26.00 FT.
DC 5	256,817.98	11,292.40	520+31.03	1.60 FT. LT.	51+91.80	9.08 FT. RT.	0.04 FT	1.64 FT. LT.	7675.96	7678.91	7670.60	8.31 FT.	7677.91	7651.91	26.00 FT.
DC 6	256,818.81	11,300.35	520+39.03	1.60 FT. LT.	51+99.80	9.08 FT. RT.	0.04 FT	1.64 FT. LT.	7676.25	7678.52	7670.78	7.74 FT.	7677.52	7652.52	25.00 FT.
DC 7	256,819.61	11,308.33	520+47.02	1.60 FT. LT.	52+07.95	9.08 FT. RT.	0.04 FT	1.64 FT. LT.	7677.58	7678.13	7670.96	7.17 FT.	7677.13	7652.13	25.00 FT.
DC 8	256,820.22	11,316.32	520+55.00	1.60 FT. LT.	52+16.18	9.08 FT. RT.	0.03 FT	1.63 FT. LT.	7677.25	7677.76	7671.95	5.81 FT.	7676.76	7652.76	24.00 FT.
DC 9	256,820.65	11,324.33	520+62.98	1.60 FT. LT.	52+24.41	9.08 FT. RT.	0.02 FT	1.62 FT. LT.	7676.93	7677.38	7673.41	3.98 FT.	7676.38	7653.38	23.00 FT.
DC 10	256,820.85	11,329.83	520+68.47	1.60 FT. LT.	52+30.01	9.08 FT. RT.	0.01 FT	1.61 FT. LT.	7676.75	7677.12	7674.41	2.71 FT.	7676.12	7655.12	21.00 FT.

90% SET

CALL UTILITY NOTIFICATION CENTER OF COLORADO
811
CALL 2-BUSINESS DAYS IN ADVANCE BEFORE YOU DIG, GRADE, OR EXCAVATE FOR THE MARKING OF UNDERGROUND MEMBER UTILITIES

REVISIONS:	NO.	DATE	REVISION DESCRIPTION:

Boulder County

Michael Baker INTERNATIONAL

BOULDER COUNTY TRANSPORTATION DEPARTMENT
ENGINEERING DIVISION

DESIGNED:	CAD:	CHECKED:	DATE:
MSC	DRH	DNB	03/25/16

UPPER FOURMILE CANYON DRIVE
GENERAL LAYOUT
RETAINING WALL 1 (3 OF 3)

PROJECT NO: 4041.SEPT12C37 | SHEET NO: 222

Daniel.Hawk 1:54:42 PM pw:\\DCPWAPP1.bkr.mbakercorp.com:pwprod\Documents\Projects\Lakewood_Office\Boulder_County_Emergency_Transportation\TO1\08_Sheet_Files\06_Structures\DGN\138366_Wall_06.dgn

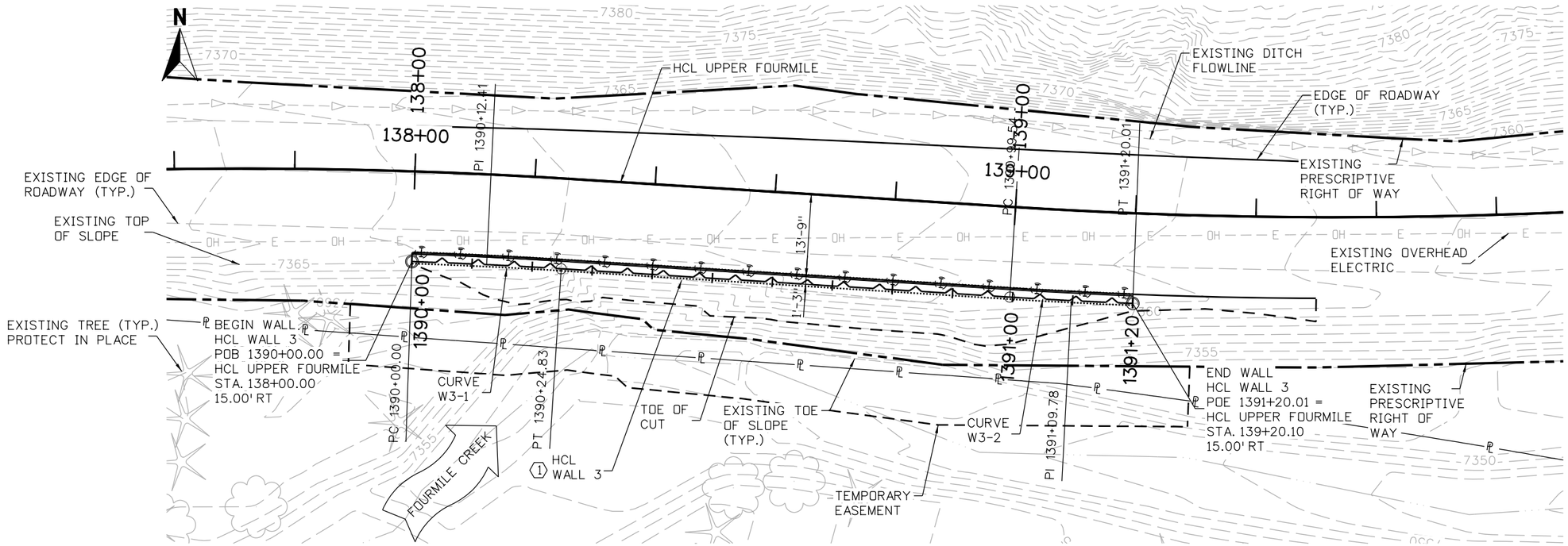

PLAN

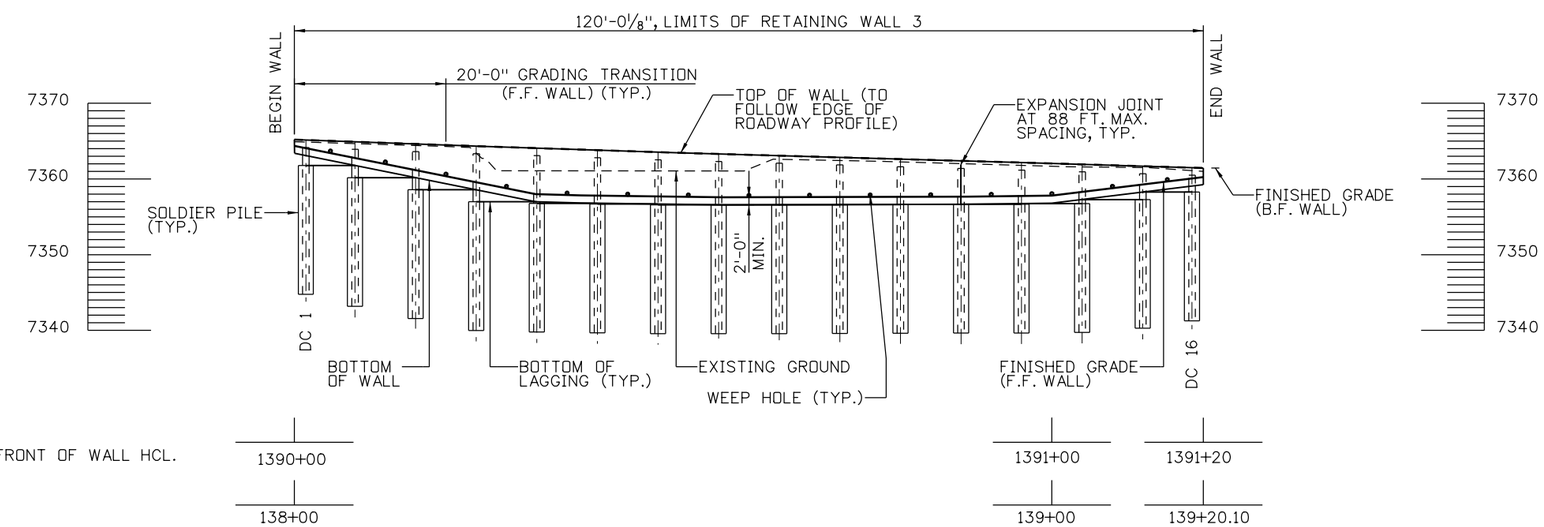

DEVELOPED ELEVATION

TAKEN AT HCL WALL

NOTES:

1. FOR FINISHED GRADING, REFER TO DRAINAGE PLANS.
2. FOR ROADWAY ALIGNMENT DATA, REFER TO ROADWAY PLANS.
3. FOR UTILITY INFORMATION, REFER TO UTILITY PLANS.

KEYNOTES:

(1) FINISHED FACE EXTENDS IN FRONT OF WALL HCL.

10 0 10 20 FT
HORIZONTAL SCALE: 1"=20'

90% SET

CALL UTILITY NOTIFICATION CENTER OF COLORADO
811
CALL 2-BUSINESS DAYS IN ADVANCE BEFORE YOU DIG, GRADE, OR EXCAVATE FOR THE MARKING OF UNDERGROUND MEMBER UTILITIES

REVISIONS:	NO.	DATE	REVISION DESCRIPTION:

Boulder County
Michael Baker INTERNATIONAL

BOULDER COUNTY TRANSPORTATION DEPARTMENT
ENGINEERING DIVISION

DESIGNED:	CAD:	CHECKED:	DATE:
MSC	DRH	DNB	03/25/16

UPPER FOURMILE CANYON DRIVE
GENERAL LAYOUT
RETAINING WALL 3 (1 OF 3)

PROJECT NO: 4041.SEPT12C37 | SHEET NO: 223

Daniel.Hawk 3:53:32 PM pw:\\DCPWAPP1.bkr.mbakercorp.com:pwprod\Documents\Projects\Lakewood_Office\Boulder_County_Emergency_Transportation\T01\08_Sheet_Files\06_Structures\DGN\138366_Wall_07.dgn

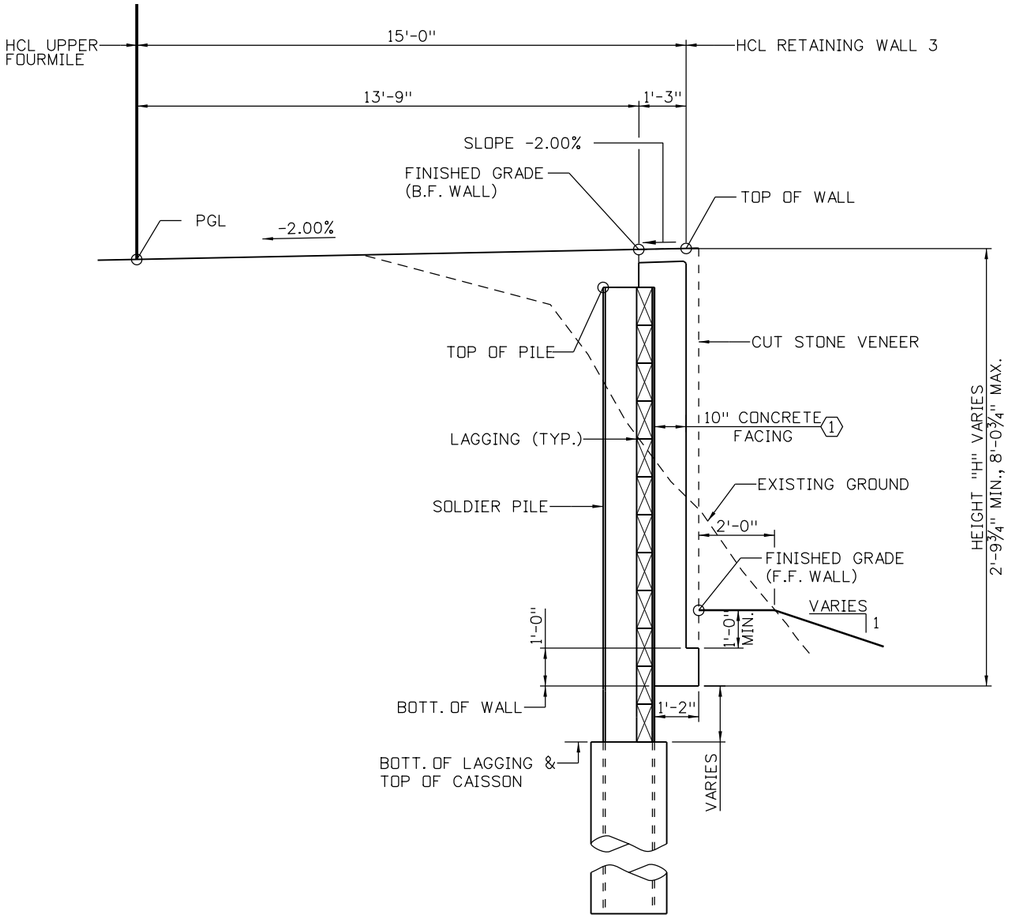

TYPICAL SECTION

LOOKING AHEAD STATION ALONG HCL WALL 3

DESIGN DATA:

AASHTO LRFD BRIDGE DESIGN SPECIFICATIONS, SEVENTH EDITION WITH INTERIMS THROUGH 2015
DESIGN METHOD: LOAD AND RESISTANCE FACTOR DESIGN (LRFD)
LIVE LOAD: HL-93 (DESIGN TRUCK OR DESIGN TANDEM, AND DESIGN LANE LOAD)

SEISMIC ZONE 1

REINFORCED CONCRETE:

CLASS D CONCRETE:	f'c=4,500 PSI
REINFORCING STEEL:	fy=60,000 PSI
SEVERITY OF SULFATE EXPOSURE:	CLASS 0

CAISSON CONCRETE:

CLASS BZ CONCRETE:	f'c=4,000 PSI
SEVERITY OF SULFATE EXPOSURE:	CLASS 0

CAISSON CASING:

AASHTO M270 (ASTM A500 GRADE B) GRADE 42:	fy=42,000 PSI

SOIL PROPERTIES:

ABOVE BOTTOM OF WALL:

SOIL UNIT WEIGHT:	120 PCF
SOIL FRICTION ANGLE:	32°
COHESION:	75 PSF
ACTIVE HORIZ. PRESSURE COEFFICIENT:	0.238

BELOW BOTTOM OF WALL:

SOIL UNIT WEIGHT:	130 PCF
SOIL FRICTION ANGLE:	35°
COHESION:	75 PSF
ACTIVE HORIZ. PRESSURE COEFFICIENT:	0.271
PASSIVE HORIZ. PRESSURE COEFFICIENT:	1.29

NOTES:

1. FOR AESTHETIC DETAILS, REFER TO CUT STONE VENEER SHEETS.
2. ROAD MAY BE CLOSED TO THRU-TRAFFIC DURING CONSTRUCTION, EXCEPT ACCESS TO ALL PRIVATE RESIDENCES SHALL REMAIN OPEN AT ALL TIMES. REFER TO PROJECT SPECIAL PROVISIONS FOR ADDITIONAL INFORMATION.
3. WALL SHALL BE CONSTRUCTED FROM THE TOP-DOWN. THE CONTRACTOR SHALL NOT DISTURB THE EXISTING GROUND CONDITIONS. EXCEPT AS NECESSARY TO INSTALL FOUNDATIONS AND COMPLETE FINISHED GRADING.
4. FOR ADDITIONAL WALL DETAILS, REFER TO SOLDIER PILE WALL DETAIL SHEETS.
5. GEOTECHNICAL INFORMATION AND RECOMMENDATIONS CAN BE FOUND IN THE FINAL GEOTECHNICAL INVESTIGATION REPORT, UPPER FOURMILE DRIVE, JANUARY, 2016.

KEYNOTES:

1. NOMINAL WALL THICKNESS SHOWN TO STRUCTURAL WALL FACING. DOES NOT INCLUDE CUT STONE VENEER ALLOWANCE TO F.F. WALL.

90% SET

CALL UTILITY NOTIFICATION CENTER OF COLORADO
811
CALL 2-BUSINESS DAYS IN ADVANCE BEFORE YOU DIG, GRADE, OR EXCAVATE FOR THE MARKING OF UNDERGROUND MEMBER UTILITIES

REVISIONS: NO.	DATE	REVISION DESCRIPTION:

BOULDER COUNTY TRANSPORTATION DEPARTMENT
ENGINEERING DIVISION
Boulder County
Michael Baker INTERNATIONAL

DESIGNED:	CAD:	CHECKED:	DATE:
MSC	DRH	DNB	03/25/16

UPPER FOURMILE CANYON DRIVE
GENERAL LAYOUT
RETAINING WALL 3 (2 OF 3)

PROJECT NO: 4041.SEPT12C37 | SHEET NO: 224

Daniel.Hawk 1:55:25 PM pw:\\DCPWAPP1.bkr.mbakercorp.com:pwprod\Documents\Projects\Lakewood_Office\Boulder_County_Emergency_Transportation\T01\08_Sheet_Files\06_Structures\DGN\138366_Wall_08.dgn

WALL 3 HORIZONTAL CONTROL LINE TABLE

CURVE NUMBER	POINT TYPE	STATION	NORTHING	EASTING	BEARING	DISTANCE	RADIUS	LENGTH	CURVE DELTA	CURVE DIRECTION
	PC	1390+00.00	256030.68	19437.37						
W3-1	PI	1390+12.41	256030.26	19449.78			835.00 FT.	24.83 FT.	1° 42'13"	RIGHT
	PT	1390+24.83	256029.48	19462.17						
					S86° 22'57E	74.72 FT.				
	PC	1390+99.54	256024.76	19536.74						
W3-2	PI	1391+09.78	256024.12	19546.95			865.00 FT.	20.47 FT.	1° 21'20"	LEFT
	PT	1391+20.01	256023.71	19557.18						

WALL 3 BOTTOM OF WALL TABLE

STATION	ELEVATION	SEGMENT LENGTH	SLOPE
1390+00.00	7362.37	31.83 FT.	-19.99 %
1390+31.83	7356.00		
1390+31.83	7356.00	6.02 FT.	-3.22 %
1390+37.85	7355.81		
1390+37.85	7355.81	18.77 FT.	-1.32 %
1390+56.62	7355.56		
1390+56.62	7355.56	32.29 FT.	0.33 %
1390+88.90	7355.67		
1390+88.90	7355.67	11.10 FT.	1.07 %
1391+00.00	7355.79		
1391+00.00	7355.79	20.00 FT.	12.30 %
1391+20.00	7358.24		

NOTES:

1. TOP AND BOTTOM OF CAISSONS SHALL BE SET BY THE CONTRACTOR AS REQUIRED FOR LAGGING. SEE SOLDIER PILE WALL DETAILS (1 OF 2) SHEET FOR MINIMUM CAISSON LENGTHS. THE CONTRACTOR SHALL INCLUDE THIS INFORMATION WITH THE WORKING DRAWINGS PROVIDED TO THE ENGINEER.

KEYNOTES:

(1) ESTIMATED DEFLECTION = 0.5% "H". ESTIMATED DEFLECTION MAY VARY DEPENDING ON BACKFILL EQUIPMENT AND PROCEDURE, AND SUBSURFACE MATERIAL ENCOUNTERED.

(2) SUBSURFACE STRATA UNKNOWN. PILE LENGTHS AND PILE TIP ELEVATIONS ARE BASED ON THE ASSUMPTION THAT BEDROCK WILL NOT BE ENCOUNTERED. IF BEDROCK IS ENCOUNTERED, EMBED CAISSON A MINIMUM OF 5 FEET INTO BEDROCK AND ADJUST THE PILE LENGTH ACCORDINGLY.

WALL 3 DATA TABLE

DRILLED CAISSON NUMBER	NORTHING	EASTING	WALL HCL		UPPER FOURMILE RD. HCL		ESTIMATED TOP OF WALL DEFLECTION (1)	EST. ℄ CAISSON PLACEMENT OFFSET FROM WALL HCL	EXISITNG GROUND ELEVATION AT ℄ CAISSON	TOP OF WALL ELEVATION	BOTTOM OF WALL ELEVATION	WALL HEIGHT ("H")	TOP OF PILE ELEVATION	PILE TIP ELEVATION (2)	PILE LENGTH (2)
			STATION AT ℄ CAISSON	PLAN OFFSET AT ℄ CAISSON	STATION AT ℄ CAISSON	PLAN OFFSET AT ℄ CAISSON									
DC 1	256,032.22	19,438.93	1390+01.51	1.60 FT. LT.	138+01.53	13.40 FT. RT.	0.02 FT	1.62 FT. LT.	7364.86	7365.13	7362.06	3.06 FT.	7364.13	7343.13	21.00 FT.
DC 2	256,031.97	19,445.43	1390+08.00	1.60 FT. LT.	138+08.14	13.40 FT. RT.	0.02 FT	1.62 FT. LT.	7364.66	7364.90	7360.77	4.13 FT.	7363.90	7341.90	22.00 FT.
DC 3	256,031.59	19,453.43	1390+15.99	1.60 FT. LT.	138+16.28	13.40 FT. RT.	0.03 FT	1.63 FT. LT.	7364.42	7364.62	7359.17	5.45 FT.	7363.62	7339.62	24.00 FT.
DC 4	256,031.13	19,461.43	1390+23.98	1.60 FT. LT.	138+24.41	13.40 FT. RT.	0.03 FT	1.63 FT. LT.	7363.40	7364.33	7357.57	6.76 FT.	7363.33	7338.33	25.00 FT.
DC 5	256,030.62	19,469.41	1390+31.98	1.60 FT. LT.	138+32.43	13.40 FT. RT.	0.04 FT	1.64 FT. LT.	7361.06	7364.06	7356.00	8.07 FT.	7363.06	7338.06	25.00 FT.
DC 6	256,030.12	19,477.39	1390+39.98	1.60 FT. LT.	138+40.43	13.40 FT. RT.	0.04 FT	1.64 FT. LT.	7361.05	7363.80	7355.78	8.02 FT.	7362.80	7337.80	25.00 FT.
DC 7	256,029.61	19,485.38	1390+47.98	1.60 FT. LT.	138+48.43	13.40 FT. RT.	0.04 FT	1.64 FT. LT.	7361.05	7363.53	7355.67	7.86 FT.	7362.53	7338.53	24.00 FT.
DC 8	256,029.11	19,493.36	1390+55.98	1.60 FT. LT.	138+56.43	13.40 FT. RT.	0.04 FT	1.64 FT. LT.	7361.04	7363.29	7355.57	7.72 FT.	7362.29	7338.29	24.00 FT.
DC 9	256,028.60	19,501.35	1390+63.98	1.60 FT. LT.	138+64.43	13.40 FT. RT.	0.04 FT	1.64 FT. LT.	7362.60	7363.06	7355.58	7.48 FT.	7362.06	7338.06	24.00 FT.
DC 10	256,028.10	19,509.33	1390+71.98	1.60 FT. LT.	138+72.43	13.40 FT. RT.	0.04 FT	1.64 FT. LT.	7362.43	7362.84	7355.61	7.23 FT.	7361.84	7337.84	24.00 FT.
DC 11	256,027.59	19,517.32	1390+79.98	1.60 FT. LT.	138+80.43	13.40 FT. RT.	0.03 FT	1.63 FT. LT.	7362.25	7362.61	7355.64	6.97 FT.	7361.61	7337.61	24.00 FT.
DC 12	256,027.09	19,525.30	1390+87.98	1.60 FT. LT.	138+88.43	13.40 FT. RT.	0.03 FT	1.63 FT. LT.	7362.01	7362.39	7355.66	6.72 FT.	7361.39	7338.39	23.00 FT.
DC 13	256,026.58	19,533.28	1390+95.98	1.60 FT. LT.	138+96.43	13.40 FT. RT.	0.03 FT	1.63 FT. LT.	7361.78	7362.16	7355.74	6.42 FT.	7361.16	7338.16	23.00 FT.
DC 14	256,026.09	19,541.26	1391+03.98	1.60 FT. LT.	139+04.35	13.40 FT. RT.	0.03 FT	1.63 FT. LT.	7361.58	7361.92	7356.28	5.65 FT.	7360.92	7337.92	23.00 FT.
DC 15	256,025.66	19,549.24	1391+11.99	1.60 FT. LT.	139+12.22	13.40 FT. RT.	0.02 FT	1.62 FT. LT.	7361.49	7361.68	7357.26	4.42 FT.	7360.68	7338.68	22.00 FT.
DC 16	256,025.37	19,555.73	1391+18.50	1.60 FT. LT.	139+18.62	13.40 FT. RT.	0.02 FT	1.62 FT. LT.	7361.09	7361.49	7358.06	3.43 FT.	7360.49	7339.49	21.00 FT.

90% SET

CALL UTILITY NOTIFICATION CENTER OF COLORADO
811
CALL 2-BUSINESS DAYS IN ADVANCE BEFORE YOU DIG, GRADE, OR EXCAVATE FOR THE MARKING OF UNDERGROUND MEMBER UTILITIES

REVISIONS:	NO.	DATE	REVISION DESCRIPTION:

Boulder County

Michael Baker INTERNATIONAL

BOULDER COUNTY TRANSPORTATION DEPARTMENT
ENGINEERING DIVISION

DESIGNED:	CAD:	CHECKED:	DATE:
MSC	DRH	DNB	03/25/16

UPPER FOURMILE CANYON DRIVE
GENERAL LAYOUT
RETAINING WALL 3 (3 OF 3)

PROJECT NO: 4041.SEPT12C37 | SHEET NO: 225

Daniel.Hawk 1:55:48 PM pw:\\DCFWAPP1.bkr.mbakercorp.com:pwprod\Documents\Projects\Lakewood_Office\Boulder_County_Emergency_Transportation\TO1\08_Sheet_Files\06_Structures\DGN\138366_Wall_09.dgn

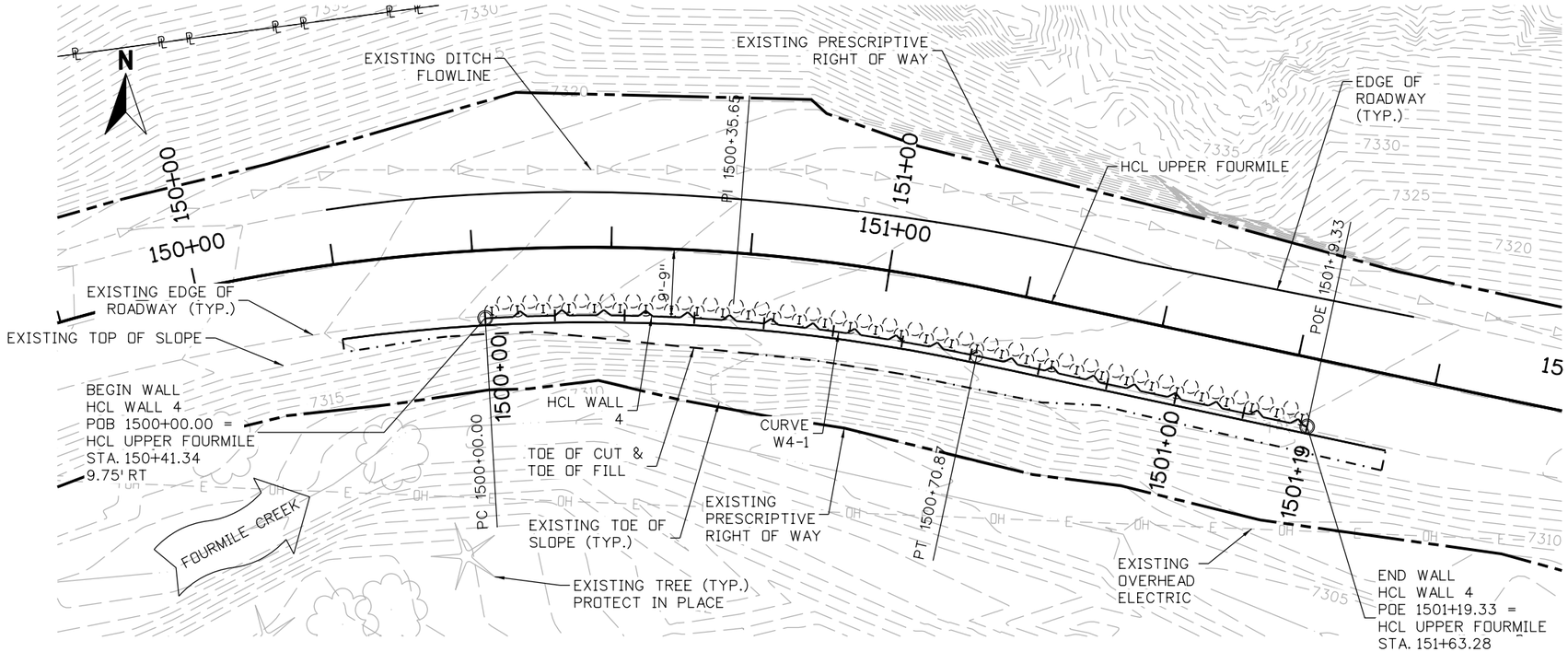

PLAN

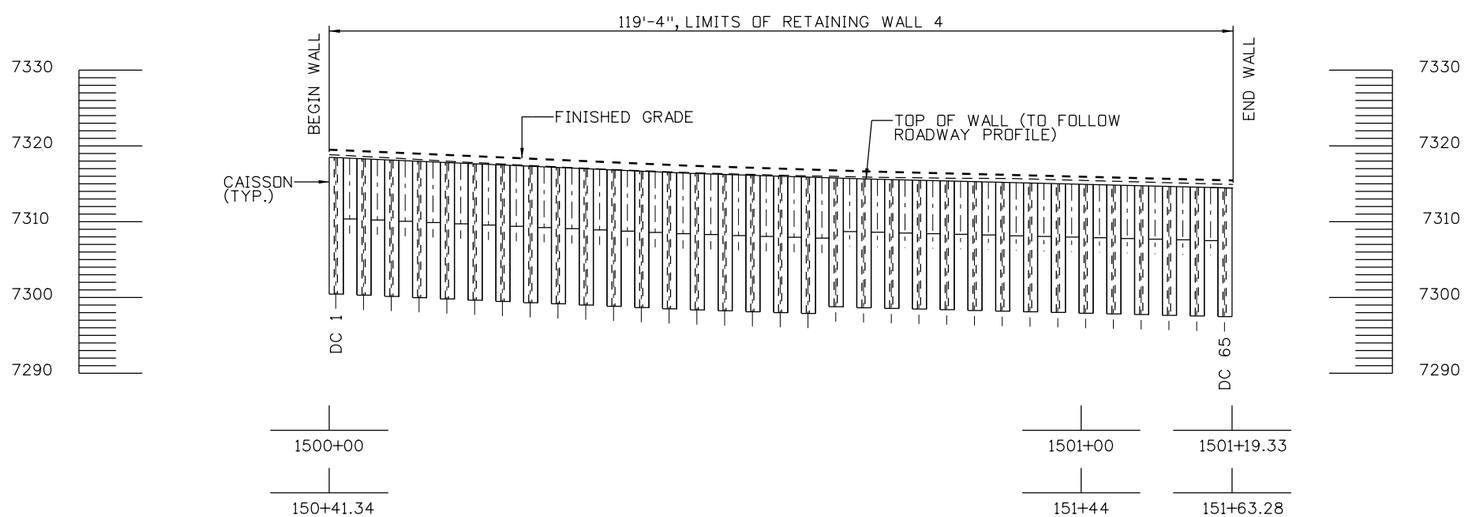

DEVELOPED ELEVATION

TAKEN AT HCL WALL

NOTES:

1. FOR FINISHED GRADING, REFER TO DRAINAGE PLANS.
2. FOR ROADWAY ALIGNMENT DATA, REFER TO ROADWAY PLANS.
3. FOR UTILITY INFORMATION, REFER TO UTILITY PLANS.

10 0 10 20 FT
HORIZONTAL SCALE: 1"=20'

90% SET

CALL UTILITY NOTIFICATION CENTER OF COLORADO
811
CALL 2-BUSINESS DAYS IN ADVANCE BEFORE YOU DIG, GRADE, OR EXCAVATE FOR THE MARKING OF UNDERGROUND MEMBER UTILITIES

REVISIONS:	NO.	DATE	REVISION DESCRIPTION:

Boulder County
Michael Baker INTERNATIONAL

BOULDER COUNTY TRANSPORTATION DEPARTMENT
ENGINEERING DIVISION

DESIGNED:	CAD:	CHECKED:	DATE:
MSC	DRH	DNB	03/25/16

UPPER FOURMILE CANYON DRIVE
GENERAL LAYOUT
RETAINING WALL 4 (1 OF 3)

PROJECT NO: 4041.SEPT12C37 | SHEET NO: 226

Daniel.Hawk 3:53:50 PM pw:\\DCPWAPP1.bkr.mbakercorp.com:pwprod\Documents\Projects\Lakewood_Office\Boulder_County_Emergency_Transportation\T01\08_Sheet_Files\06_Structures\DGN\138366_Wall_10.dgn

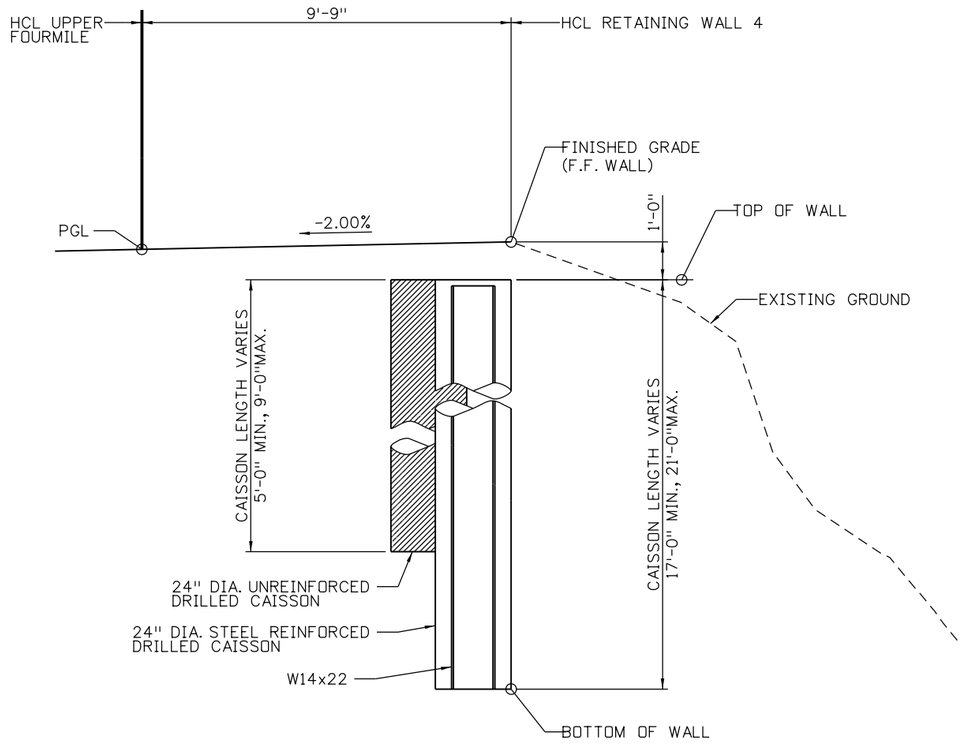

TYPICAL SECTION

LOOKING AHEAD STATION ALONG HCL WALL 4

DESIGN DATA:

AASHTO LRFD BRIDGE DESIGN SPECIFICATIONS, SEVENTH EDITION WITH INTERIMS THROUGH 2015

DESIGN METHOD: LOAD AND RESISTANCE FACTOR DESIGN (LRFD)

LIVE LOAD: HL-93 (DESIGN TRUCK OR DESIGN TANDEM, AND DESIGN LANE LOAD)

SEISMIC ZONE 1

REINFORCED CONCRETE:

CLASS D CONCRETE:	f'c=4,500 PSI
REINFORCING STEEL:	fy=60,000 PSI
SEVERITY OF SULFATE EXPOSURE:	CLASS 0

SOIL PROPERTIES:

ABOVE BOTTOM OF WALL:

SOIL UNIT WEIGHT:	120 PCF
SOIL FRICTION ANGLE:	32°
COHESION:	75 PSF
ACTIVE HORIZ. PRESSURE COEFFICIENT:	0.238

BELOW BOTTOM OF WALL:

SOIL UNIT WEIGHT:	130 PCF
SOIL FRICTION ANGLE:	35°
COHESION:	75 PSF
ACTIVE HORIZ. PRESSURE COEFFICIENT:	0.271
PASSIVE HORIZ. PRESSURE COEFFICIENT:	1.29

NOTES:

1. ROAD MAY BE CLOSED TO THRU-TRAFFIC DURING CONSTRUCTION, EXCEPT ACCESS TO ALL PRIVATE RESIDENCES SHALL REMAIN OPEN AT ALL TIMES. REFER TO PROJECT SPECIAL PROVISIONS FOR ADDITIONAL INFORMATION.
2. FOR ADDITIONAL WALL DETAILS, REFER TO CAISSON WALL DETAILS SHEET.
3. GEOTECHNICAL INFORMATION AND RECOMMENDATIONS CAN BE FOUND IN THE FINAL GEOTECHNICAL INVESTIGATION REPORT, UPPER FOURMILE DRIVE, JANUARY, 2016.

WALL 4 HORIZONTAL CONTROL LINE TABLE

CURVE NUMBER	POINT TYPE	STATION	NORTHING	EASTING	BEARING	DISTANCE	RADIUS	LENGTH	CURVE DELTA	CURVE DIRECTION
	PC	1500+00.00	256097.99	20622.26						
W4-1	PI	1500+35.65	256100.02	20657.85			265.25 FT.	70.87 FT.	15°18'33"	RIGHT
	PT	1500+70.87	256092.58	20692.71						
					S77°57'16E	48.46 FT.				
	POE	1501+19.33	256082.47	20740.11						

90% SET

CALL UTILITY NOTIFICATION CENTER OF COLORADO
811
CALL 2-BUSINESS DAYS IN ADVANCE BEFORE YOU DIG, GRADE, OR EXCAVATE FOR THE MARKING OF UNDERGROUND MEMBER UTILITIES

REVISIONS: NO.	DATE	REVISION DESCRIPTION:

Boulder County

BOULDER COUNTY TRANSPORTATION DEPARTMENT
ENGINEERING DIVISION

Michael Baker INTERNATIONAL

DESIGNED:	CAD:	CHECKED:	DATE:
MSC	DRH	DNB	03/25/16

UPPER FOURMILE CANYON DRIVE
GENERAL LAYOUT
RETAINING WALL 4 (2 OF 3)

PROJECT NO: 4041.SEPT12C37 | SHEET NO: 227

Daniel.Hawk 1:56:43 PM pw:\\DCPWAPP1.bkr.mbakercorp.com:pwprod\Documents\Projects\Lakewood_Office\Boulder_County_Emergency_Transportation\TO1\08_Sheet_Files\06_Structures\DGN\138366_Wall_11.dgn

WALL 4 DATA TABLE

DRILLED CAISSON NUMBER	NORTHING	EASTING	WALL HCL		UPPER FOURMILE RD. HCL		TOP OF WALL ELEVATION	TIP ELEVATION (1)	TOTAL CAISSON LENGTH (FT.) (1)
			STATION AT ℄ CAISSON	PLAN OFFSET AT ℄ CAISSON	STATION AT ℄ CAISSON	PLAN OFFSET AT ℄ CAISSON			
DC 1	256,099.04	20,623.20	1500+01.00	1.00 FT. LT.	150+42.38	8.75 FT. RT.	7318.45	7300.45	18.00 FT.
DC 2	256,100.30	20,624.98	1500+02.83	2.17 FT. LT.	150+44.28	7.58 FT. RT.	7318.37	7310.37	8.00 FT.
DC 3	256,099.21	20,626.88	1500+04.66	1.00 FT. LT.	150+46.18	8.75 FT. RT.	7318.29	7300.29	18.00 FT.
DC 4	256,100.44	20,628.68	1500+06.50	2.17 FT. LT.	150+48.08	7.58 FT. RT.	7318.21	7310.21	8.00 FT.
DC 5	256,099.33	20,630.56	1500+08.33	1.00 FT. LT.	150+49.98	8.75 FT. RT.	7318.13	7300.13	18.00 FT.
DC 6	256,100.54	20,632.37	1500+10.16	2.17 FT. LT.	150+51.88	7.58 FT. RT.	7318.05	7310.05	8.00 FT.
DC 7	256,099.40	20,634.24	1500+12.00	1.00 FT. LT.	150+53.78	8.75 FT. RT.	7317.97	7296.97	21.00 FT.
DC 8	256,100.58	20,636.07	1500+13.83	2.17 FT. LT.	150+55.68	7.58 FT. RT.	7317.88	7308.88	9.00 FT.
DC 9	256,099.42	20,637.92	1500+15.66	1.00 FT. LT.	150+57.58	8.75 FT. RT.	7317.80	7296.80	21.00 FT.
DC 10	256,100.57	20,639.77	1500+17.50	2.17 FT. LT.	150+59.48	7.58 FT. RT.	7317.72	7309.72	8.00 FT.
DC 11	256,099.38	20,641.60	1500+19.33	1.00 FT. LT.	150+61.38	8.75 FT. RT.	7317.64	7299.64	18.00 FT.
DC 12	256,100.51	20,643.46	1500+21.16	2.17 FT. LT.	150+63.28	7.58 FT. RT.	7317.56	7309.56	8.00 FT.
DC 13	256,099.30	20,645.28	1500+23.00	1.00 FT. LT.	150+65.18	8.75 FT. RT.	7317.48	7299.48	18.00 FT.
DC 14	256,100.40	20,647.16	1500+24.83	2.17 FT. LT.	150+67.09	7.58 FT. RT.	7317.40	7309.40	8.00 FT.
DC 15	256,099.17	20,648.95	1500+26.66	1.00 FT. LT.	150+68.99	8.75 FT. RT.	7317.32	7299.32	18.00 FT.
DC 16	256,100.24	20,650.85	1500+28.50	2.17 FT. LT.	150+70.89	7.58 FT. RT.	7317.23	7309.23	8.00 FT.
DC 17	256,098.98	20,652.63	1500+30.33	1.00 FT. LT.	150+72.79	8.75 FT. RT.	7317.15	7299.15	18.00 FT.
DC 18	256,100.03	20,654.54	1500+32.16	2.17 FT. LT.	150+74.69	7.58 FT. RT.	7317.07	7309.07	8.00 FT.
DC 19	256,098.74	20,656.30	1500+34.00	1.00 FT. LT.	150+76.59	8.75 FT. RT.	7316.99	7298.99	18.00 FT.
DC 20	256,099.77	20,658.23	1500+35.83	2.17 FT. LT.	150+78.49	7.58 FT. RT.	7316.91	7309.91	7.00 FT.
DC 21	256,098.46	20,659.97	1500+37.66	1.00 FT. LT.	150+80.39	8.75 FT. RT.	7316.83	7299.83	17.00 FT.
DC 22	256,099.45	20,661.91	1500+39.50	2.17 FT. LT.	150+82.29	7.58 FT. RT.	7316.75	7309.75	7.00 FT.
DC 23	256,098.12	20,663.64	1500+41.33	1.00 FT. LT.	150+84.19	8.75 FT. RT.	7316.67	7298.67	18.00 FT.
DC 24	256,099.09	20,665.59	1500+43.16	2.17 FT. LT.	150+86.09	7.58 FT. RT.	7316.58	7308.58	8.00 FT.
DC 25	256,097.73	20,667.30	1500+45.00	1.00 FT. LT.	150+87.99	8.75 FT. RT.	7316.50	7298.50	18.00 FT.
DC 26	256,098.67	20,669.26	1500+46.83	2.17 FT. LT.	150+89.89	7.58 FT. RT.	7316.42	7308.42	8.00 FT.
DC 27	256,097.29	20,670.95	1500+48.66	1.00 FT. LT.	150+91.79	8.75 FT. RT.	7316.36	7298.36	18.00 FT.
DC 28	256,098.21	20,672.93	1500+50.50	2.17 FT. LT.	150+93.70	7.58 FT. RT.	7316.30	7308.30	8.00 FT.
DC 29	256,096.80	20,674.60	1500+52.33	1.00 FT. LT.	150+95.60	8.75 FT. RT.	7316.24	7298.24	18.00 FT.
DC 30	256,097.69	20,676.59	1500+54.16	2.17 FT. LT.	150+97.50	7.58 FT. RT.	7316.18	7308.18	8.00 FT.
DC 31	256,096.26	20,678.24	1500+56.00	1.00 FT. LT.	150+99.40	8.75 FT. RT.	7316.12	7298.12	18.00 FT.
DC 32	256,097.12	20,680.24	1500+57.83	2.17 FT. LT.	151+01.30	7.58 FT. RT.	7316.06	7308.06	8.00 FT.
DC 33	256,095.67	20,681.87	1500+59.66	1.00 FT. LT.	151+03.20	8.75 FT. RT.	7316.00	7298.00	18.00 FT.
DC 34	256,096.51	20,683.89	1500+61.50	2.17 FT. LT.	151+05.10	7.58 FT. RT.	7315.94	7307.94	8.00 FT.
DC 35	256,095.03	20,685.50	1500+63.33	1.00 FT. LT.	151+07.00	8.75 FT. RT.	7315.89	7297.89	18.00 FT.
DC 36	256,095.84	20,687.52	1500+65.16	2.17 FT. LT.	151+08.90	7.58 FT. RT.	7315.83	7307.83	8.00 FT.
DC 37	256,094.34	20,689.11	1500+67.00	1.00 FT. LT.	151+10.80	8.75 FT. RT.	7315.77	7297.77	18.00 FT.
DC 38	256,095.12	20,691.15	1500+68.83	2.17 FT. LT.	151+12.70	7.58 FT. RT.	7315.71	7308.71	7.00 FT.
DC 39	256,093.60	20,692.72	1500+70.66	1.00 FT. LT.	151+14.60	8.75 FT. RT.	7315.65	7298.65	17.00 FT.
DC 40	256,094.36	20,694.75	1500+72.50	2.17 FT. LT.	151+16.44	7.58 FT. RT.	7315.60	7308.60	7.00 FT.
DC 41	256,092.83	20,696.30	1500+74.33	1.00 FT. LT.	151+18.28	8.75 FT. RT.	7315.56	7298.56	17.00 FT.
DC 42	256,093.59	20,698.34	1500+76.16	2.17 FT. LT.	151+20.11	7.58 FT. RT.	7315.51	7308.51	7.00 FT.
DC 43	256,092.07	20,699.89	1500+78.00	1.00 FT. LT.	151+21.94	8.75 FT. RT.	7315.47	7298.47	17.00 FT.
DC 44	256,092.83	20,701.93	1500+79.83	2.17 FT. LT.	151+23.78	7.58 FT. RT.	7315.42	7308.42	7.00 FT.
DC 45	256,091.30	20,703.48	1500+81.66	1.00 FT. LT.	151+25.61	8.75 FT. RT.	7315.38	7298.38	17.00 FT.
DC 46	256,092.06	20,705.51	1500+83.50	2.17 FT. LT.	151+27.44	7.58 FT. RT.	7315.33	7309.33	6.00 FT.
DC 47	256,090.54	20,707.06	1500+85.33	1.00 FT. LT.	151+29.28	8.75 FT. RT.	7315.29	7298.29	17.00 FT.
DC 48	256,091.30	20,709.10	1500+87.16	2.17 FT. LT.	151+31.11	7.58 FT. RT.	7315.24	7309.24	6.00 FT.
DC 49	256,089.77	20,710.65	1500+89.00	1.00 FT. LT.	151+32.94	8.75 FT. RT.	7315.20	7298.20	17.00 FT.
DC 50	256,090.53	20,712.68	1500+90.83	2.17 FT. LT.	151+34.78	7.58 FT. RT.	7315.15	7309.15	6.00 FT.
DC 51	256,089.01	20,714.23	1500+92.66	1.00 FT. LT.	151+36.61	8.75 FT. RT.	7315.10	7298.10	17.00 FT.
DC 52	256,089.77	20,716.27	1500+94.50	2.17 FT. LT.	151+38.44	7.58 FT. RT.	7315.06	7308.06	7.00 FT.
DC 53	256,088.24	20,717.82	1500+96.33	1.00 FT. LT.	151+40.28	8.75 FT. RT.	7315.01	7298.01	17.00 FT.

WALL 4 DATA TABLE CONTINUED

DRILLED CAISSON NUMBER	NORTHING	EASTING	WALL HCL		UPPER FOURMILE RD. HCL		TOP OF WALL ELEVATION	TIP ELEVATION (1)	TOTAL CAISSON LENGTH (FT.) (1)
			STATION AT ℄ CAISSON	PLAN OFFSET AT ℄ CAISSON	STATION AT ℄ CAISSON	PLAN OFFSET AT ℄ CAISSON			
DC 54	256,089.00	20,719.86	1500+98.16	2.17 FT. LT.	151+42.11	7.58 FT. RT.	7314.97	7308.97	6.00 FT.
DC 55	256,087.48	20,721.40	1501+00.00	1.00 FT. LT.	151+43.94	8.75 FT. RT.	7314.92	7297.92	17.00 FT.
DC 56	256,088.24	20,723.44	1501+01.83	2.17 FT. LT.	151+45.78	7.58 FT. RT.	7314.88	7308.88	6.00 FT.
DC 57	256,086.71	20,724.99	1501+03.66	1.00 FT. LT.	151+47.61	8.75 FT. RT.	7314.83	7297.83	17.00 FT.
DC 58	256,087.47	20,727.03	1501+05.50	2.17 FT. LT.	151+49.44	7.58 FT. RT.	7314.79	7308.79	6.00 FT.
DC 59	256,085.95	20,728.58	1501+07.33	1.00 FT. LT.	151+51.28	8.75 FT. RT.	7314.74	7297.74	17.00 FT.
DC 60	256,086.71	20,730.61	1501+09.16	2.17 FT. LT.	151+53.11	7.58 FT. RT.	7314.70	7308.70	6.00 FT.
DC 61	256,085.18	20,732.16	1501+11.00	1.00 FT. LT.	151+54.94	8.75 FT. RT.	7314.65	7297.65	17.00 FT.
DC 62	256,085.94	20,734.20	1501+12.83	2.17 FT. LT.	151+56.78	7.58 FT. RT.	7314.61	7309.61	5.00 FT.
DC 63	256,084.42	20,735.75	1501+14.66	1.00 FT. LT.	151+58.61	8.75 FT. RT.	7314.56	7297.56	17.00 FT.
DC 64	256,085.18	20,737.79	1501+16.50	2.17 FT. LT.	151+60.44	7.58 FT. RT.	7314.52	7309.52	5.00 FT.
DC 65	256,083.65	20,739.33	1501+18.33	1.00 FT. LT.	151+62.28	8.75 FT. RT.	7314.47	7297.47	17.00 FT.

KEYNOTES:

(1) SUBSURFACE STRATA UNKNOWN. CAISSON LENGTHS AND TIP ELEVATIONS ARE BASED ON THE ASSUMPTION THAT BEDROCK WILL NOT BE ENCOUNTERED. IF BEDROCK IS ENCOUNTERED, EMBED CAISSION A MINIMUM OF 5 FEET INTO BEDROCK AND ADJUST THE PILE LENGTH ACCORDINGLY.

Daniel.Hawk 1:57:03 PM pw:\\DCPWAPP1.bkr.mbakercorp.com:pwprod\Documents\Projects\Lakewood_Office\Boulder_County_Emergency_Transportation\T01\08_Sheet_Files\06_Structures\DGN\138366_Wall_12.dgn

90% SET

CALL UTILITY NOTIFICATION CENTER OF COLORADO
811
CALL 2-BUSINESS DAYS IN ADVANCE BEFORE YOU DIG, GRADE, OR EXCAVATE FOR THE MARKING OF UNDERGROUND MEMBER UTILITIES

REVISIONS:	NO.	DATE	REVISION DESCRIPTION:

Boulder County

Michael Baker INTERNATIONAL

BOULDER COUNTY TRANSPORTATION DEPARTMENT
ENGINEERING DIVISION

DESIGNED:	CAD:	CHECKED:	DATE:
MSC	DRH	DNB	03/25/16

UPPER FOURMILE CANYON DRIVE
GENERAL LAYOUT
RETAINING WALL 4 (3 OF 3)

PROJECT NO: 4041.SEPT12C37 | SHEET NO: 228

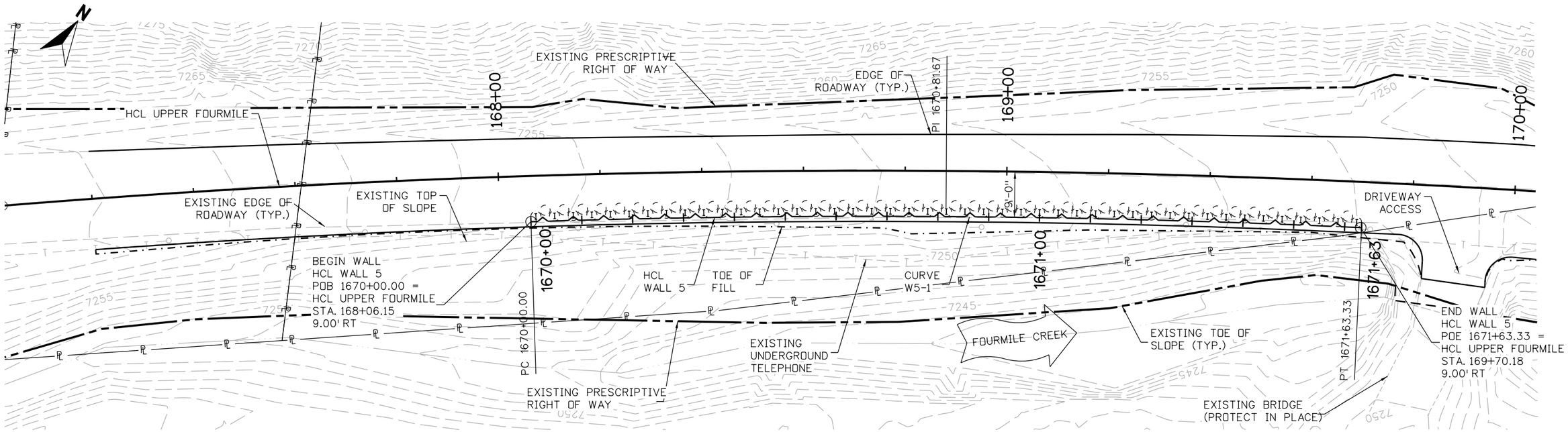

PLAN

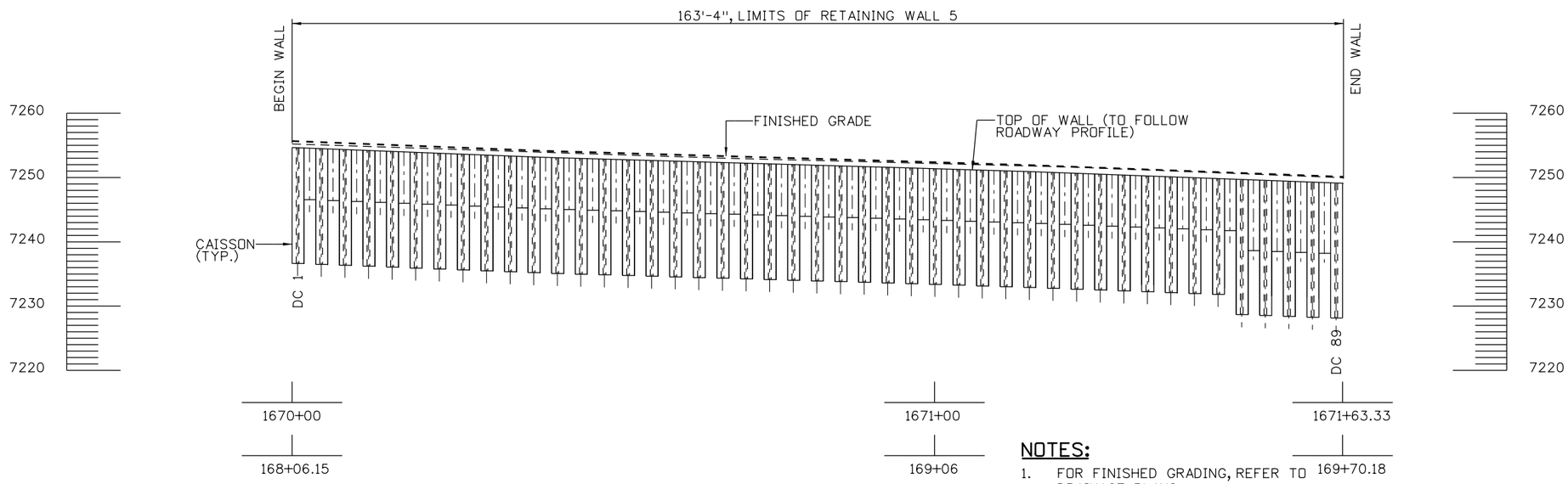

DEVELOPED ELEVATION

TAKEN AT HCL WALL

NOTES:

1. FOR FINISHED GRADING, REFER TO DRAINAGE PLANS.
2. FOR ROADWAY ALIGNMENT DATA, REFER TO ROADWAY PLANS.
3. FOR UTILITY INFORMATION, REFER TO UTILITY PLANS.

10 0 10 20 FT
HORIZONTAL SCALE: 1"=20'

90% SET

CALL UTILITY NOTIFICATION CENTER OF COLORADO
811
CALL 2-BUSINESS DAYS IN ADVANCE BEFORE YOU DIG, GRADE, OR EXCAVATE FOR THE MARKING OF UNDERGROUND MEMBER UTILITIES

REVISIONS:	NO.	DATE	REVISION DESCRIPTION:

Boulder County
Michael Baker INTERNATIONAL

BOULDER COUNTY TRANSPORTATION DEPARTMENT
ENGINEERING DIVISION

DESIGNED:	CAD:	CHECKED:	DATE:
MSC	DRH	DNB	03/25/16

UPPER FOURMILE CANYON DRIVE
GENERAL LAYOUT
RETAINING WALL 5 (1 OF 3)

PROJECT NO: 4041.SEPT12C37 | SHEET NO: 229

Daniel.Hawk 4:07:20 PM pw:\\DCPIWAPP1.bkr.mbakercorp.com:pwprod\Documents\Projects\Lakewood_Office\Boulder_County_Emergency_Transportation\T01\08_Sheet_Files\06_Structures\DGN\138366_Wall_13.dgn

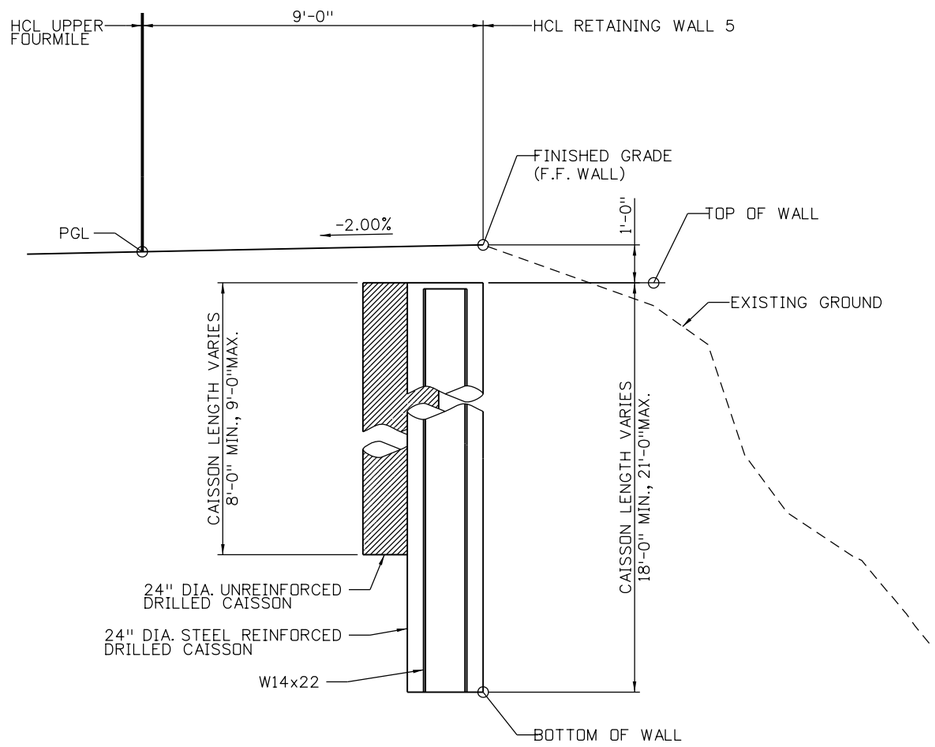

TYPICAL SECTION

LOOKING AHEAD STATION ALONG HCL WALL 5

DESIGN DATA:

AASHTO LRFD BRIDGE DESIGN SPECIFICATIONS, SEVENTH EDITION WITH INTERIMS THROUGH 2015

DESIGN METHOD:	LOAD AND RESISTANCE FACTOR DESIGN (LRFD)
LIVE LOAD:	HL-93 (DESIGN TRUCK OR DESIGN TANDEM, AND DESIGN LANE LOAD)

SEISMIC ZONE 1

REINFORCED CONCRETE:

CLASS D CONCRETE:	f'c=4,500 PSI
REINFORCING STEEL:	fy=60,000 PSI
SEVERITY OF SULFATE EXPOSURE:	CLASS 0

SOIL PROPERTIES:

ABOVE BOTTOM OF WALL:

SOIL UNIT WEIGHT:	120 PCF
SOIL FRICTION ANGLE:	32°
COHESION:	75 PSF
ACTIVE HORIZ. PRESSURE COEFFICIENT:	0.238

BELOW BOTTOM OF WALL:

SOIL UNIT WEIGHT:	130 PCF
SOIL FRICTION ANGLE:	35°
COHESION:	75 PSF
ACTIVE HORIZ. PRESSURE COEFFICIENT:	0.271
PASSIVE HORIZ. PRESSURE COEFFICIENT:	1.29

NOTES:

1. ROAD MAY BE CLOSED TO THRU-TRAFFIC DURING CONSTRUCTION, EXCEPT ACCESS TO ALL PRIVATE RESIDENCES SHALL REMAIN OPEN AT ALL TIMES. REFER TO PROJECT SPECIAL PROVISIONS FOR ADDITIONAL INFORMATION.
2. FOR ADDITIONAL WALL DETAILS, REFER TO CAISSON WALL DETAILS SHEET.
3. GEOTECHNICAL INFORMATION AND RECOMMENDATIONS CAN BE FOUND IN THE FINAL GEOTECHNICAL INVESTIGATION REPORT, UPPER FOURMILE DRIVE, JANUARY, 2016.
4. ADJUST WALL LENGTH AS NECESSARY TO EXTEND THE WALL TO THE BRIDGE OR BRIDGE WINGWALL. THE BRIDGE IS NOT SHOWN ON THE PLANS, AS IT WAS NOT CONSTRUCTED AT THE TIME OF THE INITIAL PROJECT SURVEY.

WALL 5 HORIZONTAL CONTROL LINE TABLE

CURVE NUMBER	POINT TYPE	STATION	NORTHING	EASTING	BEARING	DISTANCE	RADIUS	LENGTH	CURVE DELTA	CURVE DIRECTION
	PC	1670+00.00	256855.63	22107.12						
W5-1	PI	1670+81.67	256903.80	22173.12			2091.00 FT.	163.33 FT.	4° 28'31"	RIGHT
	PT	1671+63.33	256946.67	22242.68						

90% SET

CALL UTILITY NOTIFICATION CENTER OF COLORADO
811
CALL 2-BUSINESS DAYS IN ADVANCE BEFORE YOU DIG, GRADE, OR EXCAVATE FOR THE MARKING OF UNDERGROUND MEMBER UTILITIES

REVISIONS:	NO.	DATE	REVISION DESCRIPTION:

Boulder County

BOULDER COUNTY TRANSPORTATION DEPARTMENT
ENGINEERING DIVISION

Michael Baker INTERNATIONAL

DESIGNED:	CAD:	CHECKED:	DATE:
MSC	DRH	DNB	03/25/16

UPPER FOURMILE CANYON DRIVE
GENERAL LAYOUT
RETAINING WALL 5 (2 OF 3)

PROJECT NO: 4041.SEPT12C37 | SHEET NO: 230

Daniel.Hawk t:57:59 PM pw:\\DCPW\PP1.bkr.mbakercorp.com:pwprod\Documents\Projects\Lakewood_Office\Boulder_County_Emergency_Transportation\TOT\08_Sheet_Files\06_Structures\DGN\138366_Wall_14.dgn

WALL 5 DATA TABLE

DRILLED CAISSON NUMBER	NORTHING	EASTING	WALL HCL		UPPER FOURMILE RD. HCL		TOP OF WALL ELEVATION	TIP ELEVATION (1)	TOTAL CAISSON LENGTH (FT.) (1)
			STATION AT ℄ CAISSON	PLAN OFFSET AT ℄ CAISSON	STATION AT ℄ CAISSON	PLAN OFFSET AT ℄ CAISSON			
DC 1	256,857.02	22,107.34	1670+01.00	1.00 FT. LT.	168+07.15	8.00 FT. RT.	7254.63	7236.63	18.00 FT.
DC 2	256,859.05	22,108.13	1670+02.83	2.17 FT. LT.	168+08.99	6.83 FT. RT.	7254.55	7246.55	8.00 FT.
DC 3	256,859.18	22,110.30	1670+04.66	1.00 FT. LT.	168+10.83	8.00 FT. RT.	7254.48	7236.48	18.00 FT.
DC 4	256,861.20	22,111.10	1670+06.50	2.17 FT. LT.	168+12.67	6.83 FT. RT.	7254.41	7246.41	8.00 FT.
DC 5	256,861.34	22,113.27	1670+08.33	1.00 FT. LT.	168+14.51	8.00 FT. RT.	7254.34	7236.34	18.00 FT.
DC 6	256,863.36	22,114.08	1670+10.16	2.17 FT. LT.	168+16.35	6.83 FT. RT.	7254.27	7246.27	8.00 FT.
DC 7	256,863.48	22,116.25	1670+12.00	1.00 FT. LT.	168+18.20	8.00 FT. RT.	7254.19	7236.19	18.00 FT.
DC 8	256,865.50	22,117.05	1670+13.83	2.17 FT. LT.	168+20.04	6.83 FT. RT.	7254.12	7246.12	8.00 FT.
DC 9	256,865.63	22,119.22	1670+15.66	1.00 FT. LT.	168+21.88	8.00 FT. RT.	7254.05	7236.05	18.00 FT.
DC 10	256,867.64	22,120.03	1670+17.50	2.17 FT. LT.	168+23.72	6.83 FT. RT.	7253.98	7245.98	8.00 FT.
DC 11	256,867.76	22,122.21	1670+19.33	1.00 FT. LT.	168+25.56	8.00 FT. RT.	7253.91	7235.91	18.00 FT.
DC 12	256,869.78	22,123.02	1670+21.16	2.17 FT. LT.	168+27.40	6.83 FT. RT.	7253.84	7245.84	8.00 FT.
DC 13	256,869.90	22,125.19	1670+23.00	1.00 FT. LT.	168+29.24	8.00 FT. RT.	7253.76	7235.76	18.00 FT.
DC 14	256,871.91	22,126.01	1670+24.83	2.17 FT. LT.	168+31.08	6.83 FT. RT.	7253.69	7245.69	8.00 FT.
DC 15	256,872.02	22,128.18	1670+26.66	1.00 FT. LT.	168+32.93	8.00 FT. RT.	7253.62	7235.62	18.00 FT.
DC 16	256,874.04	22,129.00	1670+28.50	2.17 FT. LT.	168+34.77	6.83 FT. RT.	7253.55	7245.55	8.00 FT.
DC 17	256,874.15	22,131.17	1670+30.33	1.00 FT. LT.	168+36.61	8.00 FT. RT.	7253.48	7235.48	18.00 FT.
DC 18	256,876.16	22,132.00	1670+32.16	2.17 FT. LT.	168+38.45	6.83 FT. RT.	7253.41	7245.41	8.00 FT.
DC 19	256,876.26	22,134.17	1670+34.00	1.00 FT. LT.	168+40.29	8.00 FT. RT.	7253.33	7235.33	18.00 FT.
DC 20	256,878.27	22,135.00	1670+35.83	2.17 FT. LT.	168+42.13	6.83 FT. RT.	7253.26	7245.26	8.00 FT.
DC 21	256,878.37	22,137.17	1670+37.66	1.00 FT. LT.	168+43.97	8.00 FT. RT.	7253.19	7235.19	18.00 FT.
DC 22	256,880.38	22,138.00	1670+39.50	2.17 FT. LT.	168+45.81	6.83 FT. RT.	7253.12	7245.12	8.00 FT.
DC 23	256,880.48	22,140.17	1670+41.33	1.00 FT. LT.	168+47.66	8.00 FT. RT.	7253.07	7235.07	18.00 FT.
DC 24	256,882.49	22,141.01	1670+43.16	2.17 FT. LT.	168+49.50	6.83 FT. RT.	7253.02	7245.02	8.00 FT.
DC 25	256,882.58	22,143.18	1670+45.00	1.00 FT. LT.	168+51.34	8.00 FT. RT.	7252.96	7234.96	18.00 FT.
DC 26	256,884.59	22,144.02	1670+46.83	2.17 FT. LT.	168+53.18	6.83 FT. RT.	7252.91	7244.91	8.00 FT.
DC 27	256,884.68	22,146.19	1670+48.66	1.00 FT. LT.	168+55.02	8.00 FT. RT.	7252.86	7234.86	18.00 FT.
DC 28	256,886.68	22,147.03	1670+50.50	2.17 FT. LT.	168+56.86	6.83 FT. RT.	7252.81	7244.81	8.00 FT.
DC 29	256,886.77	22,149.20	1670+52.33	1.00 FT. LT.	168+58.70	8.00 FT. RT.	7252.75	7234.75	18.00 FT.
DC 30	256,888.77	22,150.05	1670+54.16	2.17 FT. LT.	168+60.54	6.83 FT. RT.	7252.70	7244.70	8.00 FT.
DC 31	256,888.85	22,152.22	1670+56.00	1.00 FT. LT.	168+62.39	8.00 FT. RT.	7252.65	7234.65	18.00 FT.
DC 32	256,890.85	22,153.07	1670+57.83	2.17 FT. LT.	168+64.23	6.83 FT. RT.	7252.59	7244.59	8.00 FT.
DC 33	256,890.93	22,155.24	1670+59.66	1.00 FT. LT.	168+66.07	8.00 FT. RT.	7252.54	7234.54	18.00 FT.
DC 34	256,892.93	22,156.10	1670+61.50	2.17 FT. LT.	168+67.91	6.83 FT. RT.	7252.49	7244.49	8.00 FT.
DC 35	256,893.01	22,158.27	1670+63.33	1.00 FT. LT.	168+69.75	8.00 FT. RT.	7252.44	7234.44	18.00 FT.
DC 36	256,895.01	22,159.13	1670+65.16	2.17 FT. LT.	168+71.59	6.83 FT. RT.	7252.38	7244.38	8.00 FT.
DC 37	256,895.08	22,161.30	1670+67.00	1.00 FT. LT.	168+73.43	8.00 FT. RT.	7252.33	7234.33	18.00 FT.
DC 38	256,897.07	22,162.16	1670+68.83	2.17 FT. LT.	168+75.27	6.83 FT. RT.	7252.28	7244.28	8.00 FT.
DC 39	256,897.14	22,164.33	1670+70.66	1.00 FT. LT.	168+77.12	8.00 FT. RT.	7252.23	7234.23	18.00 FT.
DC 40	256,899.14	22,165.19	1670+72.50	2.17 FT. LT.	168+78.96	6.83 FT. RT.	7252.17	7244.17	8.00 FT.
DC 41	256,899.20	22,167.37	1670+74.33	1.00 FT. LT.	168+80.80	8.00 FT. RT.	7252.12	7234.12	18.00 FT.
DC 42	256,901.19	22,168.23	1670+76.16	2.17 FT. LT.	168+82.64	6.83 FT. RT.	7252.07	7244.07	8.00 FT.
DC 43	256,901.25	22,170.41	1670+78.00	1.00 FT. LT.	168+84.48	8.00 FT. RT.	7252.01	7234.01	18.00 FT.
DC 44	256,903.24	22,171.28	1670+79.83	2.17 FT. LT.	168+86.32	6.83 FT. RT.	7251.96	7243.96	8.00 FT.
DC 45	256,903.30	22,173.45	1670+81.66	1.00 FT. LT.	168+88.16	8.00 FT. RT.	7251.91	7233.91	18.00 FT.
DC 46	256,905.29	22,174.32	1670+83.50	2.17 FT. LT.	168+90.00	6.83 FT. RT.	7251.86	7243.86	8.00 FT.
DC 47	256,905.34	22,176.50	1670+85.33	1.00 FT. LT.	168+91.85	8.00 FT. RT.	7251.80	7233.80	18.00 FT.
DC 48	256,907.33	22,177.38	1670+87.16	2.17 FT. LT.	168+93.69	6.83 FT. RT.	7251.75	7243.75	8.00 FT.
DC 49	256,907.38	22,179.55	1670+89.00	1.00 FT. LT.	168+95.53	8.00 FT. RT.	7251.70	7233.70	18.00 FT.
DC 50	256,909.37	22,180.43	1670+90.83	2.17 FT. LT.	168+97.37	6.83 FT. RT.	7251.64	7243.64	8.00 FT.
DC 51	256,909.41	22,182.60	1670+92.66	1.00 FT. LT.	168+99.21	8.00 FT. RT.	7251.59	7233.59	18.00 FT.
DC 52	256,911.40	22,183.49	1670+94.50	2.17 FT. LT.	169+01.05	6.83 FT. RT.	7251.54	7243.54	8.00 FT.
DC 53	256,911.44	22,185.66	1670+96.33	1.00 FT. LT.	169+02.89	8.00 FT. RT.	7251.48	7233.48	18.00 FT.

WALL 5 DATA TABLE CONTINUED

DRILLED CAISSON NUMBER	NORTHING	EASTING	WALL HCL		UPPER FOURMILE RD. HCL		TOP OF WALL ELEVATION	TIP ELEVATION (1)	TOTAL CAISSON LENGTH (FT.) (1)
			STATION AT ℄ CAISSON	PLAN OFFSET AT ℄ CAISSON	STATION AT ℄ CAISSON	PLAN OFFSET AT ℄ CAISSON			
DC 54	256,913.42	22,186.55	1670+98.16	2.17 FT. LT.	169+04.73	6.83 FT. RT.	7251.43	7243.43	8.00 FT.
DC 55	256,913.46	22,188.72	1671+00.00	1.00 FT. LT.	169+06.57	8.00 FT. RT.	7251.37	7233.37	18.00 FT.
DC 56	256,915.44	22,189.61	1671+01.83	2.17 FT. LT.	169+08.42	6.83 FT. RT.	7251.31	7243.31	8.00 FT.
DC 57	256,915.48	22,191.79	1671+03.66	1.00 FT. LT.	169+10.26	8.00 FT. RT.	7251.25	7233.25	18.00 FT.
DC 58	256,917.46	22,192.68	1671+05.50	2.17 FT. LT.	169+12.10	6.83 FT. RT.	7251.19	7243.19	8.00 FT.
DC 59	256,917.49	22,194.86	1671+07.33	1.00 FT. LT.	169+13.94	8.00 FT. RT.	7251.13	7233.13	18.00 FT.
DC 60	256,919.47	22,195.75	1671+09.16	2.17 FT. LT.	169+15.78	6.83 FT. RT.	7251.07	7243.07	8.00 FT.
DC 61	256,919.49	22,197.93	1671+11.00	1.00 FT. LT.	169+17.62	8.00 FT. RT.	7251.02	7233.02	18.00 FT.
DC 62	256,921.47	22,198.83	1671+12.83	2.17 FT. LT.	169+19.46	6.83 FT. RT.	7250.96	7242.96	8.00 FT.
DC 63	256,921.49	22,201.00	1671+14.66	1.00 FT. LT.	169+21.30	8.00 FT. RT.	7250.90	7232.90	18.00 FT.
DC 64	256,923.47	22,201.91	1671+16.50	2.17 FT. LT.	169+23.15	6.83 FT. RT.	7250.84	7242.84	8.00 FT.
DC 65	256,923.48	22,204.08	1671+18.33	1.00 FT. LT.	169+24.99	8.00 FT. RT.	7250.77	7232.77	18.00 FT.
DC 66	256,925.46	22,204.99	1671+20.16	2.17 FT. LT.	169+26.83	6.83 FT. RT.	7250.70	7242.70	8.00 FT.
DC 67	256,925.47	22,207.16	1671+22.00	1.00 FT. LT.	169+28.67	8.00 FT. RT.	7250.63	7232.63	18.00 FT.
DC 68	256,927.45	22,208.08	1671+23.83	2.17 FT. LT.	169+30.51	6.83 FT. RT.	7250.56	7242.56	8.00 FT.
DC 69	256,927.46	22,210.25	1671+25.66	1.00 FT. LT.	169+32.35	8.00 FT. RT.	7250.50	7232.50	18.00 FT.
DC 70	256,929.43	22,211.17	1671+27.50	2.17 FT. LT.	169+34.19	6.83 FT. RT.	7250.43	7242.43	8.00 FT.
DC 71	256,929.44	22,213.34	1671+29.33	1.00 FT. LT.	169+36.03	8.00 FT. RT.	7250.36	7232.36	18.00 FT.
DC 72	256,931.41	22,214.26	1671+31.16	2.17 FT. LT.	169+37.88	6.83 FT. RT.	7250.29	7242.29	8.00 FT.
DC 73	256,931.41	22,216.43	1671+33.00	1.00 FT. LT.	169+39.72	8.00 FT. RT.	7250.22	7232.22	18.00 FT.
DC 74	256,933.38	22,217.36	1671+34.83	2.17 FT. LT.	169+41.56	6.83 FT. RT.	7250.16	7242.16	8.00 FT.
DC 75	256,933.37	22,219.53	1671+36.66	1.00 FT. LT.	169+43.40	8.00 FT. RT.	7250.09	7232.09	18.00 FT.
DC 76	256,935.34	22,220.46	1671+38.50	2.17 FT. LT.	169+45.24	6.83 FT. RT.	7250.02	7242.02	8.00 FT.
DC 77	256,935.34	22,222.63	1671+40.33	1.00 FT. LT.	169+47.08	8.00 FT. RT.	7249.95	7231.95	18.00 FT.
DC 78	256,937.30	22,223.56	1671+42.16	2.17 FT. LT.	169+48.92	6.83 FT. RT.	7249.88	7241.88	8.00 FT.
DC 79	256,937.29	22,225.73	1671+44.00	1.00 FT. LT.	169+50.76	8.00 FT. RT.	7249.82	7231.82	18.00 FT.
DC 80	256,939.26	22,226.66	1671+45.83	2.17 FT. LT.	169+52.61	6.83 FT. RT.	7249.75	7241.75	8.00 FT.
DC 81	256,939.24	22,228.84	1671+47.66	1.00 FT. LT.	169+54.45	8.00 FT. RT.	7249.68	7228.68	21.00 FT.
DC 82	256,941.21	22,229.78	1671+49.50	2.17 FT. LT.	169+56.29	6.83 FT. RT.	7249.61	7240.61	9.00 FT.
DC 83	256,941.19	22,231.95	1671+51.33	1.00 FT. LT.	169+58.13	8.00 FT. RT.	7249.54	7228.54	21.00 FT.
DC 84	256,943.15	22,232.89	1671+53.16	2.17 FT. LT.	169+59.97	6.83 FT. RT.	7249.47	7240.47	9.00 FT.
DC 85	256,943.13	22,235.06	1671+55.00	1.00 FT. LT.	169+61.81	8.00 FT. RT.	7249.41	7228.41	21.00 FT.
DC 86	256,945.09	22,236.01	1671+56.83	2.17 FT. LT.	169+63.65	6.83 FT. RT.	7249.34	7240.34	9.00 FT.
DC 87	256,945.06	22,238.18	1671+58.66	1.00 FT. LT.	169+65.49	8.00 FT. RT.	7249.27	7228.27	21.00 FT.
DC 88	256,947.02	22,239.13	1671+60.50	2.17 FT. LT.	169+67.34	6.83 FT. RT.	7249.20	7241.20	8.00 FT.
DC 89	256,946.99	22,241.30	1671+62.33	1.00 FT. LT.	169+69.18	8.00 FT. RT.	7249.13	7231.13	18.00 FT.

KEYNOTES:

(1) SUBSURFACE STRATA UNKNOWN. CAISSON LENGTHS AND TIP ELEVATIONS ARE BASED ON THE ASSUMPTION THAT BEDROCK WILL NOT BE ENCOUNTERED. IF BEDROCK IS ENCOUNTERED, EMBED CAISSION A MINIMUM OF 5 FEET INTO BEDROCK AND ADJUST THE PILE LENGTH ACCORDINGLY.

90% SET

CALL UTILITY NOTIFICATION CENTER OF COLORADO
811
CALL 2-BUSINESS DAYS IN ADVANCE BEFORE YOU DIG, GRADE, OR EXCAVATE FOR THE MARKING OF UNDERGROUND MEMBER UTILITIES

REVISIONS:	NO.	DATE	REVISION DESCRIPTION:

Boulder County

Michael Baker INTERNATIONAL

BOULDER COUNTY TRANSPORTATION DEPARTMENT
ENGINEERING DIVISION

DESIGNED:	CAD:	CHECKED:	DATE:
MSC	DRH	DNB	03/25/16

UPPER FOURMILE CANYON DRIVE
GENERAL LAYOUT
RETAINING WALL 5 (3 OF 3)

PROJECT NO: 4041.SEPT12C37 | SHEET NO: 231

Daniel.Hawk 1:58:19 PM pw:\\DCPWAPP1.bkr.mbakercorp.com:pwprod\Documents\Projects\Lakewood_Office\Boulder_County_Emergency_Transportation\T01\08_Sheet_Files\06_Structures\DGN\138366_Wall_15.dgn

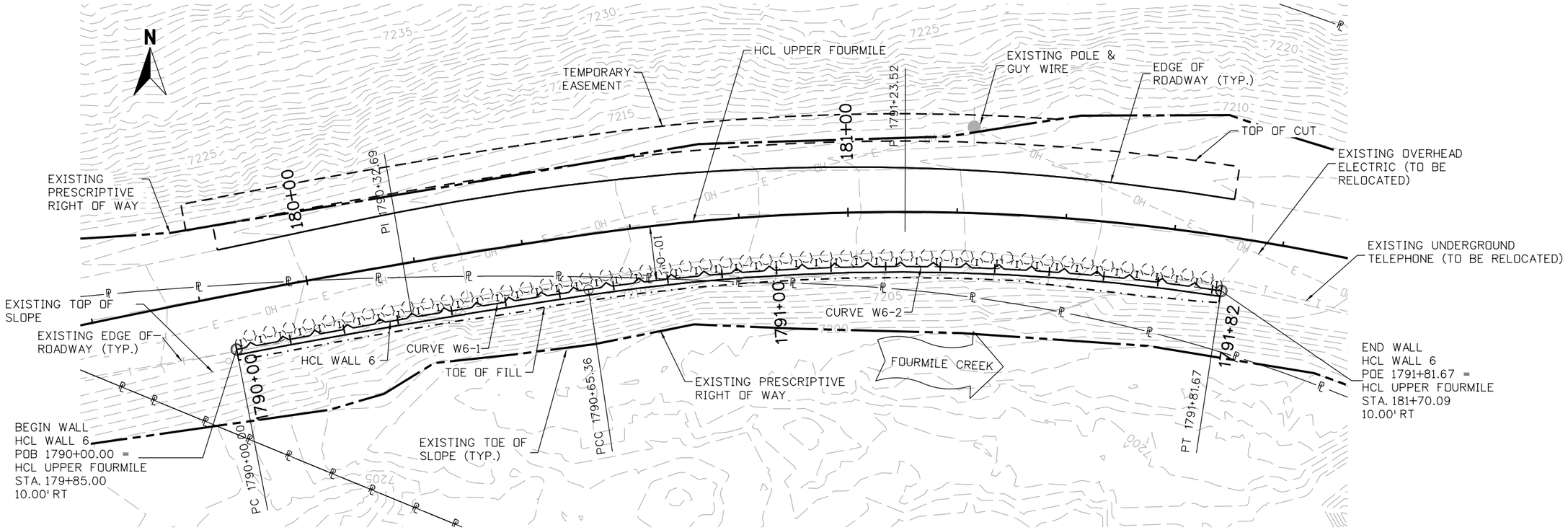

PLAN

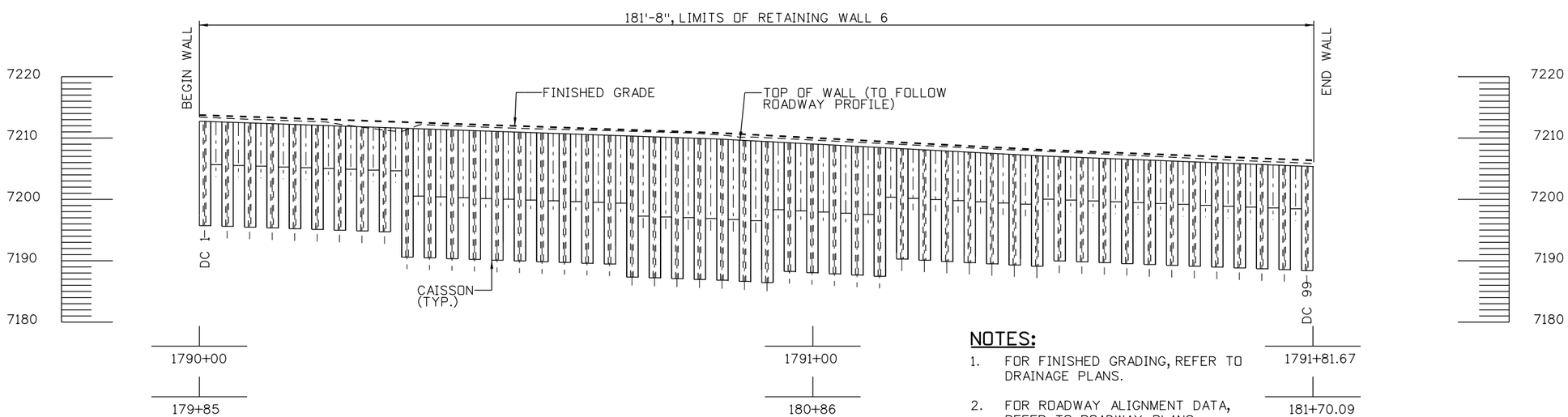

DEVELOPED ELEVATION

TAKEN AT HCL WALL

NOTES:

1. FOR FINISHED GRADING, REFER TO DRAINAGE PLANS.
2. FOR ROADWAY ALIGNMENT DATA, REFER TO ROADWAY PLANS.
3. FOR UTILITY INFORMATION, REFER TO UTILITY PLANS.

10 0 10 20 FT
HORIZONTAL SCALE: 1"=20'

90% SET

CALL UTILITY NOTIFICATION CENTER OF COLORADO
CALL 2-BUSINESS DAYS IN ADVANCE BEFORE YOU DIG, GRADE, OR EXCAVATE FOR THE MARKING OF UNDERGROUND MEMBER UTILITIES

REVISIONS: NO.	DATE	REVISION DESCRIPTION:

BOULDER COUNTY TRANSPORTATION DEPARTMENT
ENGINEERING DIVISION
Michael Baker INTERNATIONAL

DESIGNED:	CAD:	CHECKED:	DATE:
MSC	DRH	DNB	03/25/16

UPPER FOURMILE CANYON DRIVE
GENERAL LAYOUT
RETAINING WALL 6 (1 OF 3)

PROJECT NO: 4041.SEPT12C37 | SHEET NO: 232

Daniel.Hawk 4:06:16 PM pw:\\DCPWAPP1.bkr.mbakercorp.com:pwprod\Documents\Projects\Lakewood_Office\Boulder_County_Emergency_Transportation\T01\08_Sheet_Files\06_Structures\DGN\138366_Wall_16.dgn

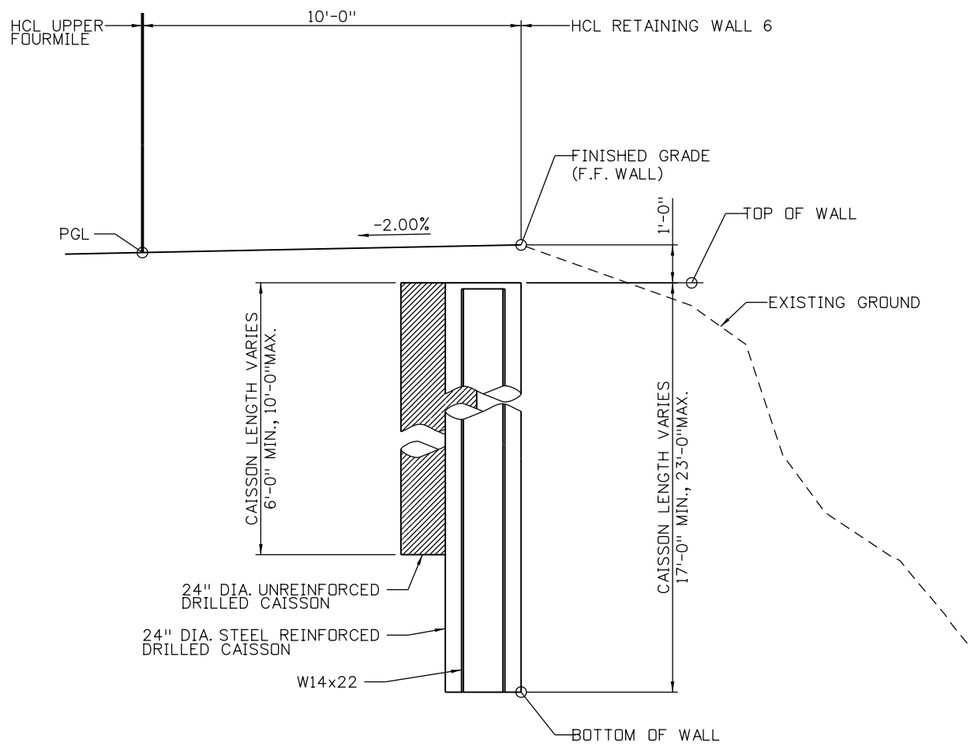

TYPICAL SECTION

LOOKING AHEAD STATION ALONG HCL WALL 6

DESIGN DATA:

AASHTO LRFD BRIDGE DESIGN SPECIFICATIONS, SEVENTH EDITION WITH INTERIMS THROUGH 2015

DESIGN METHOD:	LOAD AND RESISTANCE FACTOR DESIGN (LRFD)
LIVE LOAD:	HL-93 (DESIGN TRUCK OR DESIGN TANDEM, AND DESIGN LANE LOAD)

SEISMIC ZONE 1

REINFORCED CONCRETE:

CLASS D CONCRETE:	f'c=4,500 PSI
REINFORCING STEEL:	fy=60,000 PSI
SEVERITY OF SULFATE EXPOSURE:	CLASS 0

SOIL PROPERTIES:

ABOVE BOTTOM OF WALL:

SOIL UNIT WEIGHT:	120 PCF
SOIL FRICTION ANGLE:	32°
COHESION:	75 PSF
ACTIVE HORIZ. PRESSURE COEFFICIENT:	0.238

BELOW BOTTOM OF WALL:

SOIL UNIT WEIGHT:	130 PCF
SOIL FRICTION ANGLE:	35°
COHESION:	75 PSF
ACTIVE HORIZ. PRESSURE COEFFICIENT:	0.271
PASSIVE HORIZ. PRESSURE COEFFICIENT:	1.29

NOTES:

1. ROAD MAY BE CLOSED TO THRU-TRAFFIC DURING CONSTRUCTION, EXCEPT ACCESS TO ALL PRIVATE RESIDENCES SHALL REMAIN OPEN AT ALL TIMES. REFER TO PROJECT SPECIAL PROVISIONS FOR ADDITIONAL INFORMATION.
2. FOR ADDITIONAL WALL DETAILS, REFER TO CAISSON WALL DETAILS SHEET.
3. GEOTECHNICAL INFORMATION AND RECOMMENDATIONS CAN BE FOUND IN THE FINAL GEOTECHNICAL INVESTIGATION REPORT, UPPER FOURMILE DRIVE, JANUARY, 2016.

WALL 6 HORIZONTAL CONTROL LINE TABLE

CURVE NUMBER	POINT TYPE	STATION	NORTHING	EASTING	BEARING	DISTANCE	RADIUS	LENGTH	CURVE DELTA	CURVE DIRECTION
	PC	1790+00.00	257122.64	23179.13						
W6-1	PI	1790+32.69	257128.84	23211.23			1490.00 FT.	65.36 FT.	2° 30'49"	RIGHT
	PT	1790+65.36	257133.62	23243.56						
	PC	1790+65.36	257133.62	23243.56						
W6-2	PI	1791+23.52	257142.19	23301.52			390.00 FT.	116.30 FT.	17° 05'10"	RIGHT
	PT	1791+81.67	257133.36	23359.43						

90% SET

CALL UTILITY NOTIFICATION CENTER OF COLORADO
811
CALL 2-BUSINESS DAYS IN ADVANCE BEFORE YOU DIG, GRADE, OR EXCAVATE FOR THE MARKING OF UNDERGROUND MEMBER UTILITIES

REVISIONS: NO.	DATE	REVISION DESCRIPTION:

Boulder County

BOULDER COUNTY TRANSPORTATION DEPARTMENT
ENGINEERING DIVISION

Michael Baker INTERNATIONAL

DESIGNED:	CAD:	CHECKED:	DATE:
MSC	DRH	DNB	03/25/16

UPPER FOURMILE CANYON DRIVE
GENERAL LAYOUT
RETAINING WALL 6 (2 OF 3)

PROJECT NO: 4041.SEPT12C37 | SHEET NO: 233

Daniel.Hawk t:59:12 PM pw:\\DCPWAPP1.bkr.mbakercorp.com:pwprod\Documents\Projects\Lakewood_Office\Boulder_County_Emergency_Transportation\T01\08_Sheet_Files\06_Structures\DGN\138366_Wall_17.dgn

WALL 6 DATA TABLE

DRILLED CAISSON NUMBER	NORTHING	EASTING	WALL HCL		UPPER FOURMILE RD. HCL		TOP OF WALL ELEVATION	TIP ELEVATION (1)	TOTAL CAISSON LENGTH (FT.) (1)
			STATION AT ℄ CAISSON	PLAN OFFSET AT ℄ CAISSON	STATION AT ℄ CAISSON	PLAN OFFSET AT ℄ CAISSON			
DC 1	257,123.81	23,179.92	1790+01.00	1.00 FT. LT.	179+86.01	9.00 FT. RT.	7212.72	7195.72	17.00 FT.
DC 2	257,125.30	23,181.51	1790+02.83	2.17 FT. LT.	179+87.85	7.83 FT. RT.	7212.66	7206.66	6.00 FT.
DC 3	257,124.50	23,183.53	1790+04.67	1.00 FT. LT.	179+89.70	9.00 FT. RT.	7212.59	7195.59	17.00 FT.
DC 4	257,125.99	23,185.11	1790+06.50	2.17 FT. LT.	179+91.54	7.83 FT. RT.	7212.53	7206.53	6.00 FT.
DC 5	257,125.18	23,187.13	1790+08.33	1.00 FT. LT.	179+93.39	9.00 FT. RT.	7212.47	7195.47	17.00 FT.
DC 6	257,126.66	23,188.72	1790+10.17	2.17 FT. LT.	179+95.23	7.83 FT. RT.	7212.40	7206.40	6.00 FT.
DC 7	257,125.85	23,190.74	1790+12.00	1.00 FT. LT.	179+97.08	9.00 FT. RT.	7212.34	7195.34	17.00 FT.
DC 8	257,127.33	23,192.33	1790+13.83	2.17 FT. LT.	179+98.93	7.83 FT. RT.	7212.28	7205.28	7.00 FT.
DC 9	257,126.51	23,194.35	1790+15.67	1.00 FT. LT.	180+00.77	9.00 FT. RT.	7212.21	7195.21	17.00 FT.
DC 10	257,127.99	23,195.95	1790+17.50	2.17 FT. LT.	180+02.62	7.83 FT. RT.	7212.15	7205.15	7.00 FT.
DC 11	257,127.17	23,197.96	1790+19.33	1.00 FT. LT.	180+04.46	9.00 FT. RT.	7212.09	7195.09	17.00 FT.
DC 12	257,128.64	23,199.56	1790+21.17	2.17 FT. LT.	180+06.31	7.83 FT. RT.	7212.03	7206.03	6.00 FT.
DC 13	257,127.81	23,201.57	1790+23.00	1.00 FT. LT.	180+08.15	9.00 FT. RT.	7211.96	7194.96	17.00 FT.
DC 14	257,129.28	23,203.18	1790+24.83	2.17 FT. LT.	180+10.00	7.83 FT. RT.	7211.90	7204.90	7.00 FT.
DC 15	257,128.45	23,205.19	1790+26.67	1.00 FT. LT.	180+11.85	9.00 FT. RT.	7211.84	7193.84	18.00 FT.
DC 16	257,129.91	23,206.79	1790+28.50	2.17 FT. LT.	180+13.69	7.83 FT. RT.	7211.77	7203.77	8.00 FT.
DC 17	257,129.07	23,208.80	1790+30.33	1.00 FT. LT.	180+15.54	9.00 FT. RT.	7211.71	7193.71	18.00 FT.
DC 18	257,130.53	23,210.41	1790+32.17	2.17 FT. LT.	180+17.38	7.83 FT. RT.	7211.65	7203.65	8.00 FT.
DC 19	257,129.69	23,212.42	1790+34.00	1.00 FT. LT.	180+19.23	9.00 FT. RT.	7211.58	7190.58	21.00 FT.
DC 20	257,131.15	23,214.03	1790+35.83	2.17 FT. LT.	180+21.07	7.83 FT. RT.	7211.52	7202.52	9.00 FT.
DC 21	257,130.30	23,216.04	1790+37.67	1.00 FT. LT.	180+22.92	9.00 FT. RT.	7211.46	7190.46	21.00 FT.
DC 22	257,131.75	23,217.65	1790+39.50	2.17 FT. LT.	180+24.76	7.83 FT. RT.	7211.39	7202.39	9.00 FT.
DC 23	257,130.90	23,219.66	1790+41.33	1.00 FT. LT.	180+26.61	9.00 FT. RT.	7211.33	7190.33	21.00 FT.
DC 24	257,132.35	23,221.28	1790+43.17	2.17 FT. LT.	180+28.46	7.83 FT. RT.	7211.27	7202.27	9.00 FT.
DC 25	257,131.49	23,223.28	1790+45.00	1.00 FT. LT.	180+30.30	9.00 FT. RT.	7211.20	7190.20	21.00 FT.
DC 26	257,132.93	23,224.90	1790+46.83	2.17 FT. LT.	180+32.15	7.83 FT. RT.	7211.14	7202.14	9.00 FT.
DC 27	257,132.07	23,226.90	1790+48.67	1.00 FT. LT.	180+33.99	9.00 FT. RT.	7211.08	7190.08	21.00 FT.
DC 28	257,133.51	23,228.53	1790+50.50	2.17 FT. LT.	180+35.84	7.83 FT. RT.	7211.02	7202.02	9.00 FT.
DC 29	257,132.64	23,230.52	1790+52.33	1.00 FT. LT.	180+37.68	9.00 FT. RT.	7210.95	7189.95	21.00 FT.
DC 30	257,134.08	23,232.16	1790+54.17	2.17 FT. LT.	180+39.53	7.83 FT. RT.	7210.89	7201.89	9.00 FT.
DC 31	257,133.21	23,234.15	1790+56.00	1.00 FT. LT.	180+41.38	9.00 FT. RT.	7210.83	7189.83	21.00 FT.
DC 32	257,134.64	23,235.79	1790+57.83	2.17 FT. LT.	180+43.22	7.83 FT. RT.	7210.76	7201.76	9.00 FT.
DC 33	257,133.76	23,237.78	1790+59.67	1.00 FT. LT.	180+45.07	9.00 FT. RT.	7210.70	7189.70	21.00 FT.
DC 34	257,135.19	23,239.42	1790+61.50	2.17 FT. LT.	180+46.91	7.83 FT. RT.	7210.64	7201.64	9.00 FT.
DC 35	257,134.31	23,241.40	1790+63.33	1.00 FT. LT.	180+48.76	9.00 FT. RT.	7210.57	7189.57	21.00 FT.
DC 36	257,135.73	23,243.05	1790+65.17	2.17 FT. LT.	180+50.61	7.83 FT. RT.	7210.51	7201.51	9.00 FT.
DC 37	257,134.85	23,245.04	1790+67.00	1.00 FT. LT.	180+52.48	9.00 FT. RT.	7210.45	7189.45	21.00 FT.
DC 38	257,136.26	23,246.70	1790+68.83	2.17 FT. LT.	180+54.36	7.83 FT. RT.	7210.38	7201.38	9.00 FT.
DC 39	257,135.35	23,248.68	1790+70.67	1.00 FT. LT.	180+56.24	9.00 FT. RT.	7210.32	7187.32	23.00 FT.
DC 40	257,136.75	23,250.35	1790+72.50	2.17 FT. LT.	180+58.12	7.83 FT. RT.	7210.26	7200.26	10.00 FT.
DC 41	257,135.82	23,252.32	1790+74.33	1.00 FT. LT.	180+60.00	9.00 FT. RT.	7210.20	7187.20	23.00 FT.
DC 42	257,137.20	23,254.01	1790+76.17	2.17 FT. LT.	180+61.88	7.83 FT. RT.	7210.13	7200.13	10.00 FT.
DC 43	257,136.26	23,255.97	1790+78.00	1.00 FT. LT.	180+63.76	9.00 FT. RT.	7210.07	7187.07	23.00 FT.
DC 44	257,137.62	23,257.67	1790+79.83	2.17 FT. LT.	180+65.64	7.83 FT. RT.	7210.01	7200.01	10.00 FT.
DC 45	257,136.66	23,259.63	1790+81.67	1.00 FT. LT.	180+67.52	9.00 FT. RT.	7209.94	7186.94	23.00 FT.
DC 46	257,138.01	23,261.34	1790+83.50	2.17 FT. LT.	180+69.40	7.83 FT. RT.	7209.88	7199.88	10.00 FT.
DC 47	257,137.03	23,263.29	1790+85.33	1.00 FT. LT.	180+71.28	9.00 FT. RT.	7209.81	7186.81	23.00 FT.
DC 48	257,138.36	23,265.01	1790+87.17	2.17 FT. LT.	180+73.16	7.83 FT. RT.	7209.71	7199.71	10.00 FT.
DC 49	257,137.36	23,266.95	1790+89.00	1.00 FT. LT.	180+75.04	9.00 FT. RT.	7209.61	7186.61	23.00 FT.
DC 50	257,138.68	23,268.68	1790+90.83	2.17 FT. LT.	180+76.92	7.83 FT. RT.	7209.52	7199.52	10.00 FT.
DC 51	257,137.66	23,270.61	1790+92.67	1.00 FT. LT.	180+78.81	9.00 FT. RT.	7209.42	7186.42	23.00 FT.
DC 52	257,138.96	23,272.36	1790+94.50	2.17 FT. LT.	180+80.69	7.83 FT. RT.	7209.32	7200.32	9.00 FT.
DC 53	257,137.93	23,274.28	1790+96.33	1.00 FT. LT.	180+82.57	9.00 FT. RT.	7209.23	7188.23	21.00 FT.

WALL 6 DATA TABLE CONTINUED

DRILLED CAISSON NUMBER	NORTHING	EASTING	WALL HCL		UPPER FOURMILE RD. HCL		TOP OF WALL ELEVATION	TIP ELEVATION (1)	TOTAL CAISSON LENGTH (FT.) (1)
			STATION AT ℄ CAISSON	PLAN OFFSET AT ℄ CAISSON	STATION AT ℄ CAISSON	PLAN OFFSET AT ℄ CAISSON			
DC 54	257,139.21	23,276.04	1790+98.17	2.17 FT. LT.	180+84.45	7.83 FT. RT.	7209.13	7200.13	9.00 FT.
DC 55	257,138.16	23,277.95	1791+00.00	1.00 FT. LT.	180+86.33	9.00 FT. RT.	7209.03	7188.03	21.00 FT.
DC 56	257,139.43	23,279.72	1791+01.83	2.17 FT. LT.	180+88.21	7.83 FT. RT.	7208.94	7199.94	9.00 FT.
DC 57	257,138.36	23,281.62	1791+03.67	1.00 FT. LT.	180+90.09	9.00 FT. RT.	7208.84	7187.84	21.00 FT.
DC 58	257,139.61	23,283.40	1791+05.50	2.17 FT. LT.	180+91.97	7.83 FT. RT.	7208.74	7199.74	9.00 FT.
DC 59	257,138.52	23,285.29	1791+07.33	1.00 FT. LT.	180+93.85	9.00 FT. RT.	7208.65	7187.65	21.00 FT.
DC 60	257,139.75	23,287.09	1791+09.17	2.17 FT. LT.	180+95.73	7.83 FT. RT.	7208.55	7199.55	9.00 FT.
DC 61	257,138.64	23,288.96	1791+11.00	1.00 FT. LT.	180+97.61	9.00 FT. RT.	7208.46	7187.46	21.00 FT.
DC 62	257,139.86	23,290.77	1791+12.83	2.17 FT. LT.	180+99.49	7.83 FT. RT.	7208.36	7200.36	8.00 FT.
DC 63	257,138.74	23,292.64	1791+14.67	1.00 FT. LT.	181+01.37	9.00 FT. RT.	7208.26	7190.26	18.00 FT.
DC 64	257,139.94	23,294.46	1791+16.50	2.17 FT. LT.	181+03.25	7.83 FT. RT.	7208.17	7200.17	8.00 FT.
DC 65	257,138.79	23,296.31	1791+18.33	1.00 FT. LT.	181+05.13	9.00 FT. RT.	7208.07	7190.07	18.00 FT.
DC 66	257,139.98	23,298.14	1791+20.17	2.17 FT. LT.	181+07.01	7.83 FT. RT.	7207.97	7199.97	8.00 FT.
DC 67	257,138.82	23,299.99	1791+22.00	1.00 FT. LT.	181+08.89	9.00 FT. RT.	7207.88	7189.88	18.00 FT.
DC 68	257,139.98	23,301.83	1791+23.83	2.17 FT. LT.	181+10.77	7.83 FT. RT.	7207.78	7199.78	8.00 FT.
DC 69	257,138.81	23,303.66	1791+25.67	1.00 FT. LT.	181+12.65	9.00 FT. RT.	7207.68	7189.68	18.00 FT.
DC 70	257,139.95	23,305.52	1791+27.50	2.17 FT. LT.	181+14.53	7.83 FT. RT.	7207.59	7199.59	8.00 FT.
DC 71	257,138.76	23,307.34	1791+29.33	1.00 FT. LT.	181+16.41	9.00 FT. RT.	7207.49	7189.49	18.00 FT.
DC 72	257,139.89	23,309.20	1791+31.17	2.17 FT. LT.	181+18.29	7.83 FT. RT.	7207.39	7199.39	8.00 FT.
DC 73	257,138.68	23,311.02	1791+33.00	1.00 FT. LT.	181+20.17	9.00 FT. RT.	7207.30	7189.30	18.00 FT.
DC 74	257,139.79	23,312.89	1791+34.83	2.17 FT. LT.	181+22.05	7.83 FT. RT.	7207.20	7199.20	8.00 FT.
DC 75	257,138.56	23,314.69	1791+36.67	1.00 FT. LT.	181+23.93	9.00 FT. RT.	7207.11	7189.11	18.00 FT.
DC 76	257,139.66	23,316.57	1791+38.50	2.17 FT. LT.	181+25.81	7.83 FT. RT.	7207.03	7200.03	7.00 FT.
DC 77	257,138.42	23,318.36	1791+40.33	1.00 FT. LT.	181+27.69	9.00 FT. RT.	7206.95	7189.95	17.00 FT.
DC 78	257,139.49	23,320.26	1791+42.17	2.17 FT. LT.	181+29.57	7.83 FT. RT.	7206.88	7199.88	7.00 FT.
DC 79	257,138.23	23,322.03	1791+44.00	1.00 FT. LT.	181+31.45	9.00 FT. RT.	7206.81	7189.81	17.00 FT.
DC 80	257,139.29	23,323.94	1791+45.83	2.17 FT. LT.	181+33.33	7.83 FT. RT.	7206.74	7199.74	7.00 FT.
DC 81	257,138.01	23,325.70	1791+47.67	1.00 FT. LT.	181+35.22	9.00 FT. RT.	7206.67	7189.67	17.00 FT.
DC 82	257,139.05	23,327.62	1791+49.50	2.17 FT. LT.	181+37.10	7.83 FT. RT.	7206.60	7199.60	7.00 FT.
DC 83	257,137.76	23,329.37	1791+51.33	1.00 FT. LT.	181+38.98	9.00 FT. RT.	7206.53	7189.53	17.00 FT.
DC 84	257,138.78	23,331.30	1791+53.17	2.17 FT. LT.	181+40.86	7.83 FT. RT.	7206.46	7199.46	7.00 FT.
DC 85	257,137.47	23,333.04	1791+55.00	1.00 FT. LT.	181+42.74	9.00 FT. RT.	7206.39	7189.39	17.00 FT.
DC 86	257,138.48	23,334.97	1791+56.83	2.17 FT. LT.	181+44.62	7.83 FT. RT.	7206.31	7199.31	7.00 FT.
DC 87	257,137.15	23,336.70	1791+58.67	1.00 FT. LT.	181+46.50	9.00 FT. RT.	7206.24	7189.24	17.00 FT.
DC 88	257,138.14	23,338.64	1791+60.50	2.17 FT. LT.	181+48.38	7.83 FT. RT.	7206.17	7199.17	7.00 FT.
DC 89	257,136.79	23,340.36	1791+62.33	1.00 FT. LT.	181+50.26	9.00 FT. RT.	7206.10	7189.10	17.00 FT.
DC 90	257,137.76	23,342.31	1791+64.17	2.17 FT. LT.	181+52.14	7.83 FT. RT.	7206.03	7199.03	7.00 FT.
DC 91	257,136.40	23,344.01	1791+66.00	1.00 FT. LT.	181+54.02	9.00 FT. RT.	7205.96	7188.96	17.00 FT.
DC 92	257,137.35	23,345.97	1791+67.83	2.17 FT. LT.	181+55.90	7.83 FT. RT.	7205.89	7198.89	7.00 FT.
DC 93	257,135.98	23,347.66	1791+69.67	1.00 FT. LT.	181+57.78	9.00 FT. RT.	7205.82	7187.82	18.00 FT.
DC 94	257,136.91	23,349.63	1791+71.50	2.17 FT. LT.	181+59.66	7.83 FT. RT.	7205.75	7197.75	8.00 FT.
DC 95	257,135.52	23,351.31	1791+73.33	1.00 FT. LT.	181+61.54	9.00 FT. RT.	7205.67	7187.67	18.00 FT.
DC 96	257,136.43	23,353.29	1791+75.17	2.17 FT. LT.	181+63.42	7.83 FT. RT.	7205.60	7197.60	8.00 FT.
DC 97	257,135.03	23,354.95	1791+77.00	1.00 FT. LT.	181+65.30	9.00 FT. RT.	7205.53	7187.53	18.00 FT.
DC 98	257,135.92	23,356.94	1791+78.83	2.17 FT. LT.	181+67.18	7.83 FT. RT.	7205.46	7197.46	8.00 FT.
DC 99	257,134.50	23,358.59	1791+80.67	1.00 FT. LT.	181+69.06	9.00 FT. RT.	7205.39	7187.39	18.00 FT.

KEYNOTES:

(1) SUBSURFACE STRATA UNKNOWN. CAISSON LENGTHS AND TIP ELEVATIONS ARE BASED ON THE ASSUMPTION THAT BEDROCK WILL NOT BE ENCOUNTERED. IF BEDROCK IS ENCOUNTERED, EMBED CAISSION A MINIMUM OF 5 FEET INTO BEDROCK AND ADJUST THE PILE LENGTH ACCORDINGLY.

90% SET

CALL UTILITY NOTIFICATION CENTER OF COLORADO
811
CALL 2-BUSINESS DAYS IN ADVANCE BEFORE YOU DIG, GRADE, OR EXCAVATE FOR THE MARKING OF UNDERGROUND MEMBER UTILITIES

REVISIONS:	NO.	DATE	REVISION DESCRIPTION:

Boulder County

BOULDER COUNTY TRANSPORTATION DEPARTMENT
ENGINEERING DIVISION

Michael Baker INTERNATIONAL

DESIGNED:	CAD:	CHECKED:	DATE:
MSC	DRH	DNB	03/25/16

UPPER FOURMILE CANYON DRIVE
GENERAL LAYOUT
RETAINING WALL 6 (3 OF 3)

PROJECT NO: 4041.SEPT12C37 | SHEET NO: 234

Daniel.Hawk 1:59:32 PM pw:\\DCPWAPP1.bkr.mbakercorp.com:pwprod\Documents\Projects\Lakewood_Office\Boulder_County_Emergency_Transportation\T01\08_Sheet_Files\06_Structures\DGN\138366_Wall_18.dgn

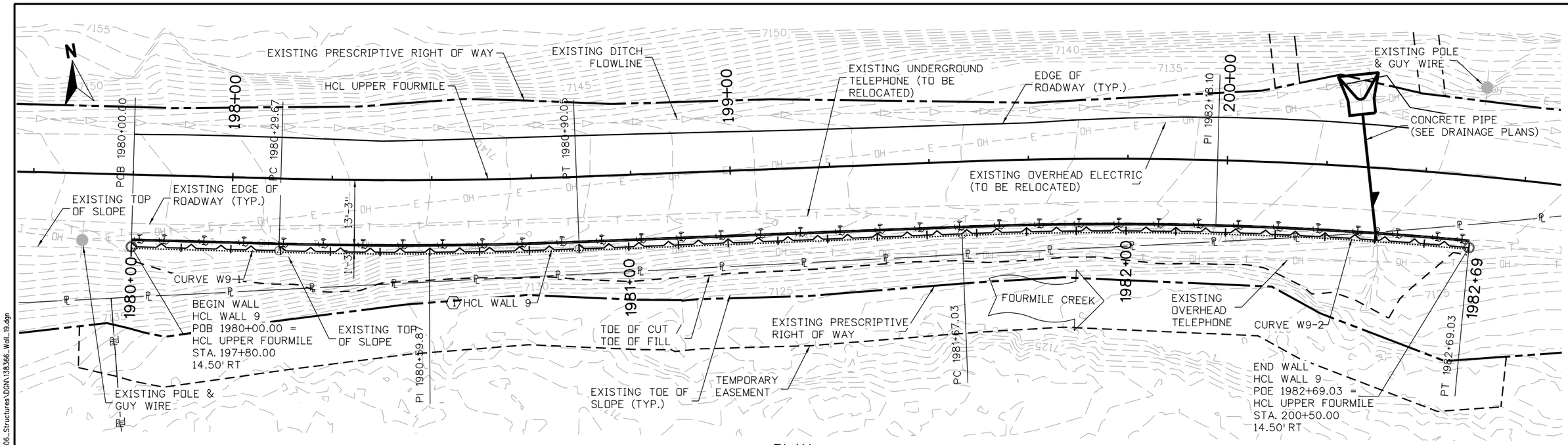

PLAN

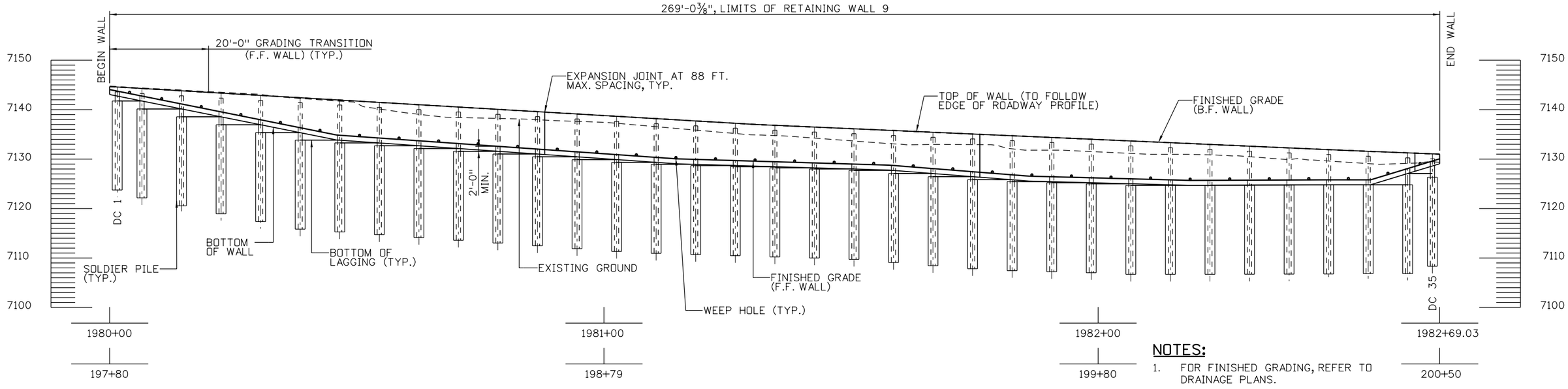

DEVELOPED ELEVATION

TAKEN AT HCL WALL

KEYNOTES:

1. FINISHED FACE EXTENDS IN FRONT OF WALL HCL.

NOTES:

1. FOR FINISHED GRADING, REFER TO DRAINAGE PLANS.
2. FOR ROADWAY ALIGNMENT DATA, REFER TO ROADWAY PLANS.
3. FOR UTILITY INFORMATION, REFER TO UTILITY PLANS.

10 0 10 20 FT
HORIZONTAL SCALE: 1"=20'

90% SET

CALL UTILITY NOTIFICATION CENTER OF COLORADO
811
CALL 2-BUSINESS DAYS IN ADVANCE BEFORE YOU DIG, GRADE, OR EXCAVATE FOR THE MARKING OF UNDERGROUND MEMBER UTILITIES

REVISIONS:	NO.	DATE	REVISION DESCRIPTION:

Boulder County
Michael Baker INTERNATIONAL

BOULDER COUNTY TRANSPORTATION DEPARTMENT
ENGINEERING DIVISION

DESIGNED:	CAD:	CHECKED:	DATE:
MSC	DRH	DNB	03/25/16

UPPER FOURMILE CANYON DRIVE
GENERAL LAYOUT
RETAINING WALL 9 (1 OF 3)

PROJECT NO: 4041.SEPT12C37 | SHEET NO: 235

Daniel.Hawk 4:30:52 PM pw:\\DCPWAPP1.bkr.mbakercorp.com:pwprod\Documents\Projects\Lakewood_Office\Boulder_County_Emergency_Transportation\T01\08_Sheet_Files\06_Structures\DGN\138366_Wall_19.dgn

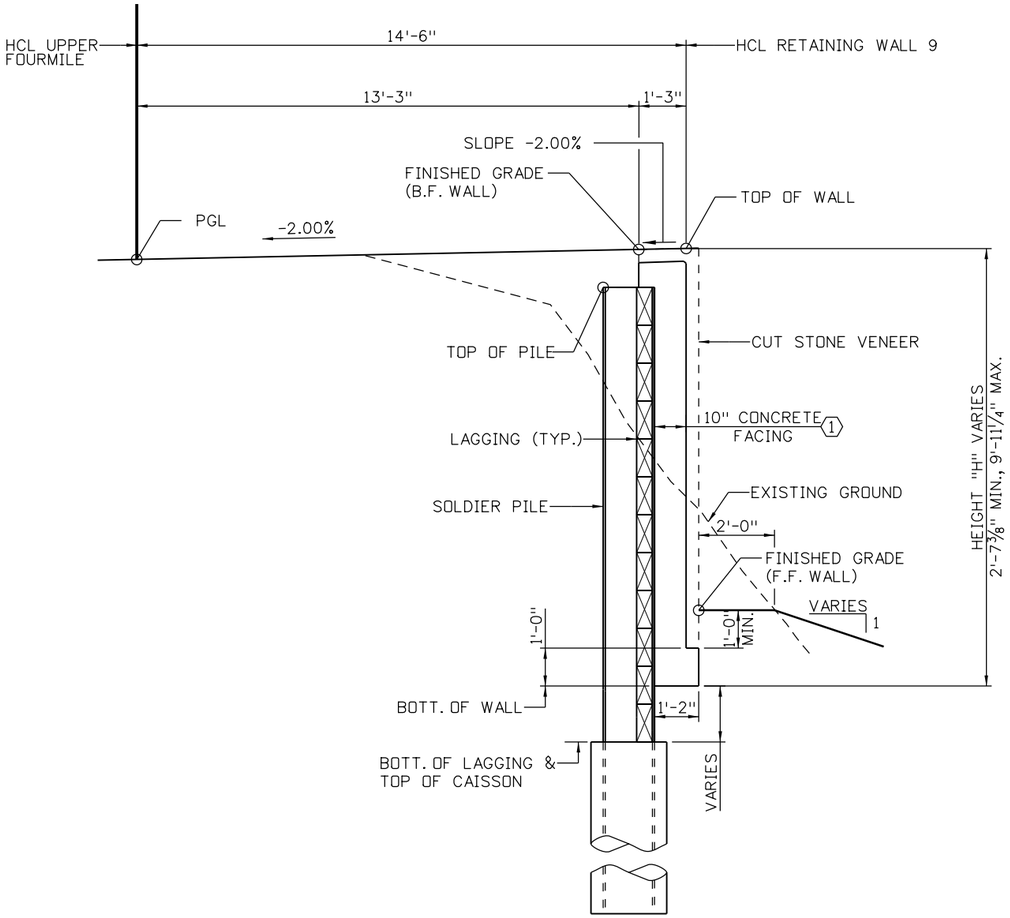

TYPICAL SECTION

LOOKING AHEAD STATION ALONG HCL WALL 9

DESIGN DATA:

AASHTO LRFD BRIDGE DESIGN SPECIFICATIONS, SEVENTH EDITION WITH INTERIMS THROUGH 2015

DESIGN METHOD:	LOAD AND RESISTANCE FACTOR DESIGN (LRFD)	
LIVE LOAD:	HL-93 (DESIGN TRUCK OR DESIGN TANDEM, AND DESIGN LANE LOAD)	
SEISMIC ZONE 1		
REINFORCED CONCRETE:		
	CLASS D CONCRETE:	f'c=4,500 PSI
	REINFORCING STEEL:	fy=60,000 PSI
	SEVERITY OF SULFATE EXPOSURE:	CLASS 0
CAISSON CONCRETE:		
	CLASS BZ CONCRETE:	f'c=4,000 PSI
	SEVERITY OF SULFATE EXPOSURE:	CLASS 0
CAISSON CASING:		
	AASHTO M270 (ASTM A500 GRADE B) GRADE 42:	fy=42,000 PSI
SOIL PROPERTIES:		
ABOVE BOTTOM OF WALL:		
	SOIL UNIT WEIGHT:	120 PCF
	SOIL FRICTION ANGLE:	32°
	COHESION:	75 PSF
	ACTIVE HORIZ. PRESSURE COEFFICIENT:	0.238
BELOW BOTTOM OF WALL:		
	SOIL UNIT WEIGHT:	130 PCF
	SOIL FRICTION ANGLE:	35°
	COHESION:	75 PSF
	ACTIVE HORIZ. PRESSURE COEFFICIENT:	0.271
	PASSIVE HORIZ. PRESSURE COEFFICIENT:	1.29

NOTES:

1. FOR AESTHETIC DETAILS, REFER TO CUT STONE VENEER SHEETS.
2. ROAD MAY BE CLOSED TO THRU-TRAFFIC DURING CONSTRUCTION, EXCEPT ACCESS TO ALL PRIVATE RESIDENCES SHALL REMAIN OPEN AT ALL TIMES. REFER TO PROJECT SPECIAL PROVISIONS FOR ADDITIONAL INFORMATION.
3. WALL SHALL BE CONSTRUCTED FROM THE TOP-DOWN. THE CONTRACTOR SHALL NOT DISTURB THE EXISTING GROUND CONDITIONS. EXCEPT AS NECESSARY TO INSTALL FOUNDATIONS AND COMPLETE FINISHED GRADING.
4. FOR ADDITIONAL WALL DETAILS, REFER TO SOLDIER PILE WALL DETAIL SHEETS.
5. GEOTECHNICAL INFORMATION AND RECOMMENDATIONS CAN BE FOUND IN THE FINAL GEOTECHNICAL INVESTIGATION REPORT, UPPER FOURMILE DRIVE, JANUARY, 2016.

KEYNOTES:

1. NOMINAL WALL THICKNESS SHOWN TO STRUCTURAL WALL FACING. DOES NOT INCLUDE CUT STONE VENEER ALLOWANCE TO F.F. WALL.

90% SET

CALL UTILITY NOTIFICATION CENTER OF COLORADO
811
CALL 2-BUSINESS DAYS IN ADVANCE BEFORE YOU DIG, GRADE, OR EXCAVATE FOR THE MARKING OF UNDERGROUND MEMBER UTILITIES

REVISIONS: NO.	DATE	REVISION DESCRIPTION:

Boulder County
Michael Baker INTERNATIONAL

BOULDER COUNTY TRANSPORTATION DEPARTMENT
ENGINEERING DIVISION

DESIGNED:	CAD:	CHECKED:	DATE:
MSC	DRH	DNB	03/25/16

UPPER FOURMILE CANYON DRIVE
GENERAL LAYOUT
RETAINING WALL 9 (2 OF 3)

PROJECT NO: 4041.SEPT12C37 | SHEET NO: 236

Daniel.Hawk 2:00:27 PM pw:\\DCPWAPP1.bkr.mbakercorp.com:pwprod\Documents\Projects\Lakewood_Office\Boulder_County_Emergency_Transportation\T01\08_Sheet_Files\06_Structures\DGN\138366_Wall_20.dgn

WALL 9 HORIZONTAL CONTROL LINE TABLE

CURVE NUMBER	POINT TYPE	STATION	NORTHING	EASTING	BEARING	DISTANCE	RADIUS	LENGTH	CURVE DELTA	CURVE DIRECTION
	POB	1980+00.00	256779.14	24884.24						
W9-1					S79° 03'21E	29.67				
	PC	1980+29.67	256773.50	24913.37						
	PI	1980+59.87	256767.77	24943.02			914.50	60.38	3° 46'59"	LEFT
	PT	1980+90.05	256764.00	24972.99						
					S82° 50'21E	76.98				
	PC	1981+67.03	256754.41	25049.37						
W9-2	PI	1982+18.10	256748.04	25100.04			765.50	101.99	7° 38'02"	RIGHT
	PT	1982+69.03	256735.00	25149.42						

WALL 9 DATA TABLE

DRILLED CAISSON NUMBER	NORTHING	EASTING	WALL HCL		UPPER FOURMILE RD. HCL		ESTIMATED TOP OF WALL DEFLECTION (1)	EST. ℄ CAISSON PLACEMENT OFFSET FROM WALL HCL	EXISITNG GROUND ELEVATION AT ℄ CAISSON	TOP OF WALL ELEVATION	BOTTOM OF WALL ELEVATION	WALL HEIGHT ("H")	TOP OF PILE ELEVATION	PILE TIP ELEVATION (2)	PILE LENGTH (2)
			STATION AT ℄ CAISSON	PLAN OFFSET AT ℄ CAISSON	STATION AT ℄ CAISSON	PLAN OFFSET AT ℄ CAISSON									
DC 1	256,780.42	24,886.04	1980+01.53	1.60 FT. LT.	197+81.53	12.90 FT. RT.	0.01 FT	1.61 FT. LT.	7144.69	7144.58	7141.76	2.83 FT.	7143.58	7122.58	21.00 FT.
DC 2	256,779.47	24,890.95	1980+06.53	1.60 FT. LT.	197+86.53	12.90 FT. RT.	0.02 FT	1.62 FT. LT.	7144.37	7144.29	7140.76	3.53 FT.	7143.29	7120.29	23.00 FT.
DC 3	256,777.95	24,898.81	1980+14.53	1.60 FT. LT.	197+94.53	12.90 FT. RT.	0.02 FT	1.62 FT. LT.	7143.97	7143.82	7139.16	4.66 FT.	7142.82	7118.82	24.00 FT.
DC 4	256,776.43	24,906.66	1980+22.53	1.60 FT. LT.	198+02.53	12.90 FT. RT.	0.03 FT	1.63 FT. LT.	7143.53	7143.35	7137.56	5.79 FT.	7142.35	7117.35	25.00 FT.
DC 5	256,774.91	24,914.51	1980+30.53	1.60 FT. LT.	198+10.51	12.90 FT. RT.	0.03 FT	1.64 FT. LT.	7143.07	7142.88	7135.96	6.92 FT.	7141.88	7115.88	26.00 FT.
DC 6	256,773.44	24,922.37	1980+38.53	1.60 FT. LT.	198+18.39	12.90 FT. RT.	0.04 FT	1.64 FT. LT.	7142.28	7142.41	7134.36	8.05 FT.	7141.41	7114.41	27.00 FT.
DC 7	256,772.03	24,930.24	1980+46.54	1.60 FT. LT.	198+26.27	12.90 FT. RT.	0.05 FT	1.65 FT. LT.	7141.72	7141.94	7132.83	9.11 FT.	7140.94	7113.94	27.00 FT.
DC 8	256,770.69	24,938.12	1980+54.55	1.60 FT. LT.	198+34.15	12.90 FT. RT.	0.05 FT	1.65 FT. LT.	7140.15	7141.47	7132.27	9.20 FT.	7140.47	7113.47	27.00 FT.
DC 9	256,769.42	24,946.01	1980+62.56	1.60 FT. LT.	198+42.03	12.90 FT. RT.	0.05 FT	1.65 FT. LT.	7139.07	7141.00	7131.71	9.29 FT.	7140.00	7113.00	27.00 FT.
DC 10	256,768.22	24,953.91	1980+70.56	1.60 FT. LT.	198+49.91	12.90 FT. RT.	0.05 FT	1.65 FT. LT.	7138.41	7140.53	7131.14	9.39 FT.	7139.53	7112.53	27.00 FT.
DC 11	256,767.09	24,961.82	1980+78.57	1.60 FT. LT.	198+57.80	12.90 FT. RT.	0.05 FT	1.65 FT. LT.	7138.22	7140.06	7130.58	9.48 FT.	7139.06	7111.06	28.00 FT.
DC 12	256,766.03	24,969.75	1980+86.58	1.60 FT. LT.	198+65.68	12.90 FT. RT.	0.05 FT	1.65 FT. LT.	7137.97	7139.59	7130.02	9.57 FT.	7138.59	7110.59	28.00 FT.
DC 13	256,765.03	24,977.68	1980+94.58	1.60 FT. LT.	198+73.62	12.90 FT. RT.	0.05 FT	1.65 FT. LT.	7137.63	7139.12	7129.46	9.66 FT.	7138.12	7110.12	28.00 FT.
DC 14	256,764.03	24,985.62	1981+02.58	1.60 FT. LT.	198+81.62	12.90 FT. RT.	0.05 FT	1.65 FT. LT.	7137.24	7138.65	7128.89	9.76 FT.	7137.65	7109.65	28.00 FT.
DC 15	256,763.03	24,993.56	1981+10.58	1.60 FT. LT.	198+89.62	12.90 FT. RT.	0.05 FT	1.65 FT. LT.	7136.55	7138.18	7128.33	9.85 FT.	7137.18	7109.18	28.00 FT.
DC 16	256,762.04	25,001.49	1981+18.58	1.60 FT. LT.	198+97.62	12.90 FT. RT.	0.05 FT	1.65 FT. LT.	7135.87	7137.71	7127.93	9.78 FT.	7136.71	7108.71	28.00 FT.
DC 17	256,761.04	25,009.43	1981+26.58	1.60 FT. LT.	199+05.62	12.90 FT. RT.	0.05 FT	1.65 FT. LT.	7135.18	7137.24	7127.70	9.55 FT.	7136.24	7109.24	27.00 FT.
DC 18	256,760.04	25,017.37	1981+34.58	1.60 FT. LT.	199+13.62	12.90 FT. RT.	0.05 FT	1.65 FT. LT.	7134.75	7136.83	7127.46	9.37 FT.	7135.83	7108.83	27.00 FT.
DC 19	256,759.04	25,025.31	1981+42.58	1.60 FT. LT.	199+21.62	12.90 FT. RT.	0.05 FT	1.65 FT. LT.	7134.25	7136.48	7127.22	9.25 FT.	7135.48	7108.48	27.00 FT.
DC 20	256,758.05	25,033.24	1981+50.58	1.60 FT. LT.	199+29.62	12.90 FT. RT.	0.05 FT	1.65 FT. LT.	7133.66	7136.13	7126.99	9.14 FT.	7135.13	7108.13	27.00 FT.
DC 21	256,757.05	25,041.18	1981+58.58	1.60 FT. LT.	199+37.62	12.90 FT. RT.	0.05 FT	1.65 FT. LT.	7133.08	7135.78	7126.71	9.07 FT.	7134.78	7107.78	27.00 FT.
DC 22	256,756.05	25,049.12	1981+66.58	1.60 FT. LT.	199+45.63	12.90 FT. RT.	0.05 FT	1.65 FT. LT.	7132.96	7135.42	7126.08	9.35 FT.	7134.42	7107.42	27.00 FT.
DC 23	256,755.02	25,057.06	1981+74.58	1.60 FT. LT.	199+53.76	12.90 FT. RT.	0.05 FT	1.65 FT. LT.	7132.93	7135.07	7125.45	9.63 FT.	7134.07	7106.07	28.00 FT.
DC 24	256,753.90	25,064.99	1981+82.57	1.60 FT. LT.	199+61.90	12.90 FT. RT.	0.05 FT	1.65 FT. LT.	7132.07	7134.72	7124.82	9.90 FT.	7133.72	7105.72	28.00 FT.
DC 25	256,752.70	25,072.91	1981+90.56	1.60 FT. LT.	199+70.05	12.90 FT. RT.	0.05 FT	1.65 FT. LT.	7131.80	7134.37	7124.43	9.94 FT.	7133.37	7105.37	28.00 FT.
DC 26	256,751.42	25,080.81	1981+98.55	1.60 FT. LT.	199+78.19	12.90 FT. RT.	0.05 FT	1.65 FT. LT.	7131.52	7134.02	7124.22	9.80 FT.	7133.02	7105.02	28.00 FT.
DC 27	256,750.05	25,088.70	1982+06.54	1.60 FT. LT.	199+86.33	12.90 FT. RT.	0.05 FT	1.65 FT. LT.	7131.15	7133.67	7124.01	9.66 FT.	7132.67	7105.67	27.00 FT.
DC 28	256,748.60	25,096.58	1982+14.53	1.60 FT. LT.	199+94.47	12.90 FT. RT.	0.05 FT	1.65 FT. LT.	7130.97	7133.32	7123.80	9.51 FT.	7132.32	7105.32	27.00 FT.
DC 29	256,747.07	25,104.44	1982+22.52	1.60 FT. LT.	200+02.61	12.90 FT. RT.	0.05 FT	1.65 FT. LT.	7130.85	7132.97	7123.71	9.25 FT.	7131.97	7104.97	27.00 FT.
DC 30	256,745.46	25,112.28	1982+30.51	1.60 FT. LT.	200+10.76	12.90 FT. RT.	0.04 FT	1.64 FT. LT.	7130.48	7132.62	7123.75	8.87 FT.	7131.62	7105.62	26.00 FT.
DC 31	256,743.77	25,120.11	1982+38.50	1.60 FT. LT.	200+18.90	12.90 FT. RT.	0.04 FT	1.64 FT. LT.	7129.89	7132.26	7123.78	8.48 FT.	7131.26	7105.26	26.00 FT.
DC 32	256,741.99	25,127.92	1982+46.50	1.60 FT. LT.	200+27.04	12.90 FT. RT.	0.04 FT	1.64 FT. LT.	7129.62	7131.91	7123.82	8.10 FT.	7130.91	7104.91	26.00 FT.
DC 33	256,740.13	25,135.71	1982+54.49	1.60 FT. LT.	200+35.19	12.90 FT. RT.	0.04 FT	1.64 FT. LT.	7129.10	7131.58	7123.82	7.76 FT.	7130.58	7105.58	25.00 FT.
DC 34	256,738.20	25,143.48	1982+62.48	1.60 FT. LT.	200+43.33	12.90 FT. RT.	0.03 FT	1.63 FT. LT.	7129.14	7131.25	7126.08	5.18 FT.	7130.25	7105.25	25.00 FT.
DC 35	256,736.94	25,148.32	1982+67.47	1.60 FT. LT.	200+48.42	12.90 FT. RT.	0.02 FT	1.62 FT. LT.	7129.48	7131.05	7127.59	3.46 FT.	7130.05	7107.05	23.00 FT.

WALL 9 BOTTOM OF WALL TABLE

STATION	ELEVATION	SEGMENT LENGTH	SLOPE
1980+00.00	7142.06	45.95 FT.	-20.00 %
1980+45.95	7132.87		
1980+45.95	7132.87	68.72 FT.	-7.02 %
1981+14.67	7128.05		
1981+14.67	7128.05	42.98 FT.	-2.94 %
1981+57.65	7126.78		
1981+57.65	7126.78	28.26 FT.	-7.88 %
1981+85.91	7124.55		
1981+85.91	7124.55	32.66 FT.	-2.62 %
1982+18.58	7123.70		
1982+18.58	7123.70	27.10 FT.	0.43 %
1982+45.68	7123.82		
1982+45.68	7123.82	9.34 FT.	0.00 %
1982+55.02	7123.82		
1982+55.02	7123.82	13.98 FT.	30.31 %
1982+69.00	7128.05		

NOTES:

1. TOP AND BOTTOM OF CAISSONS SHALL BE SET BY THE CONTRACTOR AS REQUIRED FOR LAGGING. SEE SOLDIER PILE WALL DETAILS (1 OF 2) SHEET FOR MINIMUM CAISSON LENGTHS. THE CONTRACTOR SHALL INCLUDE THIS INFORMATION WITH THE WORKING DRAWINGS PROVIDED TO THE ENGINEER.

KEYNOTES:

(1) ESTIMATED DEFLECTION = 0.5% "H". ESTIMATED DEFLECTION MAY VARY DEPENDING ON BACKFILL EQUIPMENT AND PROCEDURE, AND SUBSURFACE MATERIAL ENCOUNTERED.

(2) SUBSURFACE STRATA UNKNOWN. PILE LENGTHS AND PILE TIP ELEVATIONS ARE BASED ON THE ASSUMPTION THAT BEDROCK WILL NOT BE ENCOUNTERED. IF BEDROCK IS ENCOUNTERED, EMBED CAISSON A MINIMUM OF 5 FEET INTO BEDROCK AND ADJUST THE PILE LENGTH ACCORDINGLY.

90% SET

CALL UTILITY NOTIFICATION CENTER OF COLORADO
811
CALL 2-BUSINESS DAYS IN ADVANCE BEFORE YOU DIG, GRADE, OR EXCAVATE FOR THE MARKING OF UNDERGROUND MEMBER UTILITIES

REVISIONS: NO.	DATE	REVISION DESCRIPTION:

BOULDER COUNTY TRANSPORTATION DEPARTMENT
ENGINEERING DIVISION
Michael Baker INTERNATIONAL

DESIGNED:	CAD:	CHECKED:	DATE:
MSC	DRH	DNB	03/25/16

UPPER FOURMILE CANYON DRIVE
GENERAL LAYOUT
RETAINING WALL 9 (3 OF 3)

PROJECT NO: 4041.SEPT12C37 | SHEET NO: 237

Daniel.Hawk 3:09:06 PM pw:\\DCPWAPP1.bkr.mbakercorp.com:pwprod\Documents\Projects\Lakewood_Office\Boulder_County_Emergency_Transportation\T01\08_Sheet_Files\06_Structures\DGN\138366_Wall_21.dgn

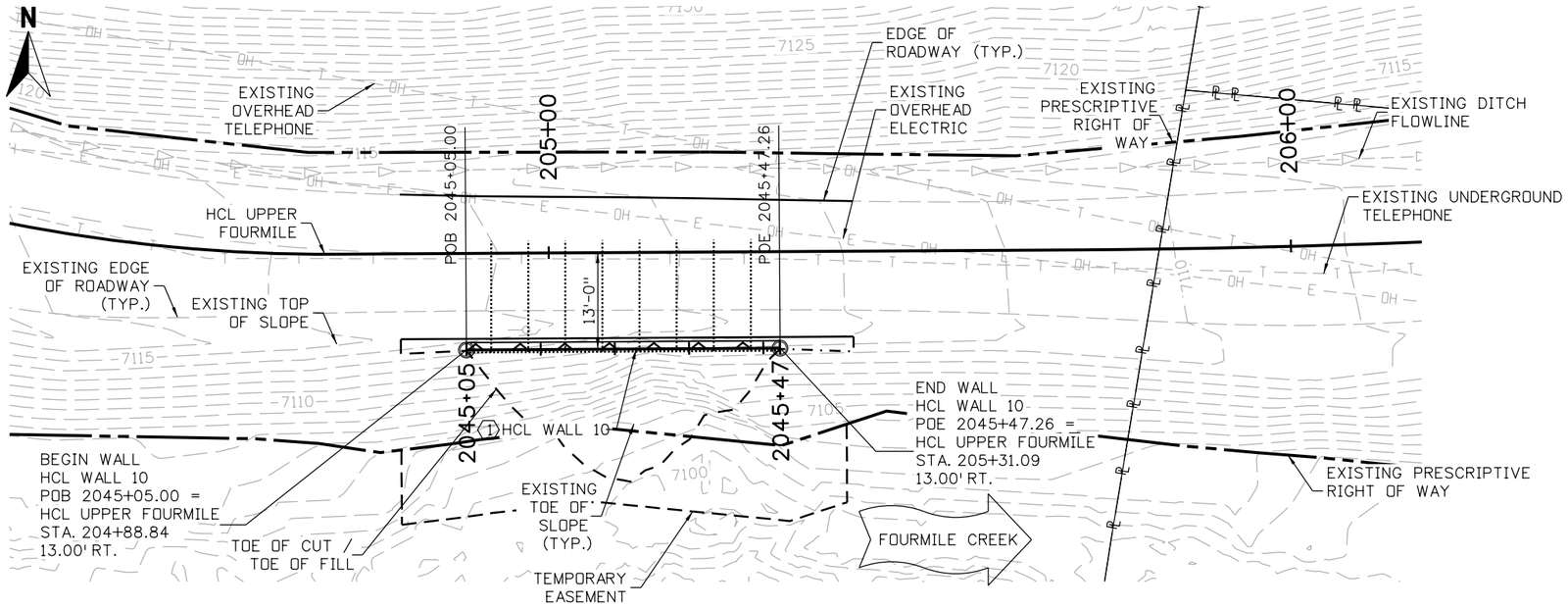

PLAN

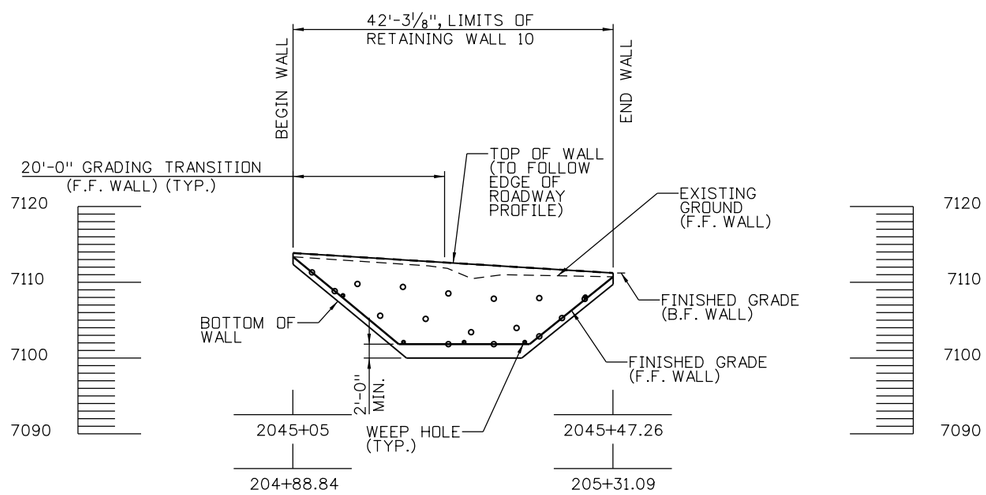

DEVELOPED ELEVATION

TAKEN AT HCL WALL

NOTES:

1. FOR FINISHED GRADING, REFER TO DRAINAGE PLANS.
2. FOR ROADWAY ALIGNMENT DATA, REFER TO ROADWAY PLANS.
3. FOR UTILITY INFORMATION, REFER TO UTILITY PLANS.
4. GROUND NAILS ARE GENERICALLY SHOWN. SEE GROUND NAIL LAYOUT FOR ACTUAL LOCATIONS.

KEYNOTES:

1. FINISHED FACE EXTENDS IN FRONT OF WALL HCL.

10 0 10 20 FT
HORIZONTAL SCALE: 1"=20'

90% SET

CALL UTILITY NOTIFICATION CENTER OF COLORADO
811
CALL 2-BUSINESS DAYS IN ADVANCE BEFORE YOU DIG, GRADE, OR EXCAVATE FOR THE MARKING OF UNDERGROUND MEMBER UTILITIES

REVISIONS:	NO.	DATE	REVISION DESCRIPTION:

Boulder County

Michael Baker INTERNATIONAL

BOULDER COUNTY TRANSPORTATION DEPARTMENT
ENGINEERING DIVISION

DESIGNED:	CAD:	CHECKED:	DATE:
MSC	DRH	DNB	03/25/16

UPPER FOURMILE CANYON DRIVE
GENERAL LAYOUT
RETAINING WALL 10 (1 OF 3)

PROJECT NO: 4041.SEPT12C37 | SHEET NO: 238

Daniel.Hawk 4:31:20 PM pw:\\DCPWAPP1.bkr.mbakercorp.com:pwprod\Documents\Projects\Lakewood_Office\Boulder_County_Emergency_Transportation\TO1\08_Sheet_Files\06_Structures\DGN\138366_Wall_22.dgn

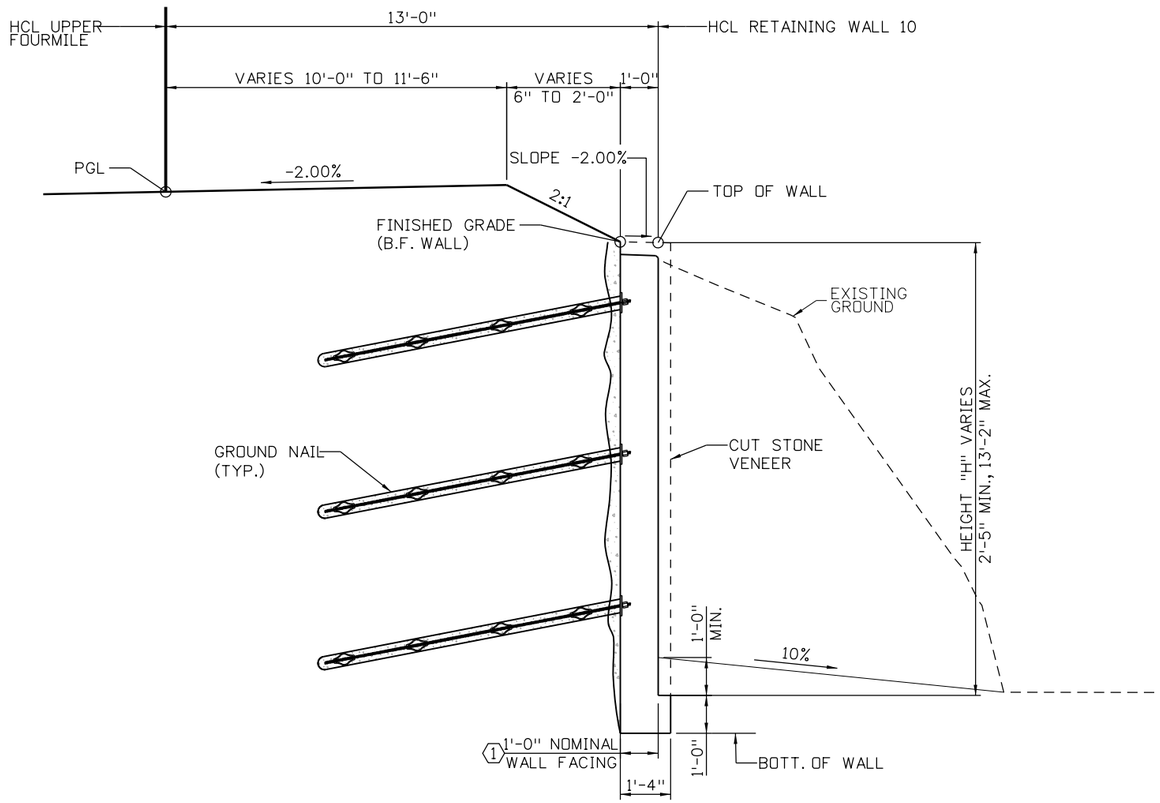

TYPICAL SECTION

LOOKING AHEAD STATION ALONG HCL WALL 10

DESIGN DATA:

AASHTO LRFD BRIDGE DESIGN SPECIFICATIONS, SEVENTH EDITION WITH INTERIMS THROUGH 2015

DESIGN METHOD:	LOAD AND RESISTANCE FACTOR DESIGN (LRFD)
LIVE LOAD:	HL-93 (DESIGN TRUCK OR DESIGN TANDEM, AND DESIGN LANE LOAD)

SEISMIC ZONE 1

REINFORCED CONCRETE:

CLASS D CONCRETE:	f'c=4,500 PSI
REINFORCING STEEL:	fy=60,000 PSI
SEVERITY OF SULFATE EXPOSURE:	CLASS 0

SOIL PROPERTIES:

SOIL UNIT WEIGHT:	120 PCF
SOIL FRICTION ANGLE:	32°
COHESION:	75 PSF
BOND STRESS:	10 PSI

NOTES:

1. FOR AESTHETIC DETAILS, REFER TO CUT STONE VENEER SHEETS.
2. ROAD MAY BE CLOSED TO THRU-TRAFFIC DURING CONSTRUCTION, EXCEPT ACCESS TO ALL PRIVATE RESIDENCES SHALL REMAIN OPEN AT ALL TIMES. REFER TO PROJECT SPECIAL PROVISIONS FOR ADDITIONAL INFORMATION.
3. WALL SHALL BE CONSTRUCTED FROM THE TOP-DOWN. THE CONTRACTOR SHALL NOT DISTURB THE EXISTING GROUND CONDITIONS. EXCEPT AS NECESSARY TO INSTALL FOUNDATIONS AND COMPLETE FINISHED GRADING.
4. FOR ADDITIONAL WALL DETAILS, REFER TO SOIL NAIL WALL DETAIL SHEETS.
5. GEOTECHNICAL INFORMATION AND RECOMMENDATIONS CAN BE FOUND IN THE FINAL GEOTECHNICAL INVESTIGATION REPORT, UPPER FOURMILE DRIVE, JANUARY, 2016.

KEYNOTES:

1. NOMINAL WALL THICKNESS SHOWN TO STRUCTURAL WALL FACING. DOES NOT INCLUDE CUT STONE VENEER ALLOWANCE TO F.F. WALL.

90% SET

CALL UTILITY NOTIFICATION CENTER OF COLORADO
811
CALL 2-BUSINESS DAYS IN ADVANCE BEFORE YOU DIG, GRADE, OR EXCAVATE FOR THE MARKING OF UNDERGROUND MEMBER UTILITIES

REVISIONS: NO.	DATE	REVISION DESCRIPTION:

BOULDER COUNTY TRANSPORTATION DEPARTMENT
ENGINEERING DIVISION
Boulder County
Michael Baker INTERNATIONAL

DESIGNED:	CAD:	CHECKED:	DATE:
MSC	DRH	DNB	03/25/16

UPPER FOURMILE CANYON DRIVE
GENERAL LAYOUT
RETAINING WALL 10 (2 OF 3)

PROJECT NO: 4041.SEPT12C37 | SHEET NO: 239

Daniel.Hank 2:01:44 PM pw:\\DCPWAPP1.bkr.mbakercorp.com:pwprod\Documents\Projects\Lakewood_Office\Boulder_County_Emergency_Transportation\TO1\08_Sheet_Files\06_Structures\DGN\138366_Wall_23.dgn

WALL 10 HORIZONTAL CONTROL LINE TABLE

CURVE NUMBER	POINT TYPE	STATION	NORTHING	EASTING	BEARING	DISTANCE
	POB	2045+05.00	256620.48	25574.28		
					N89° 39'17E	42.26 FT.
	POE	2045+47.26	256620.74	25616.53		

WALL 10 TOP OF WALL TABLE

STATION	ELEVATION	SEGMENT LENGTH	SLOPE
2045+05.00	7113.88	15.00 FT.	-6.25 %
2045+20.00	7112.94		
2045+20.00	7112.94	15.00 FT.	-6.25 %
2045+35.00	7112.01		
2045+35.00	7112.01	12.26 FT.	-6.25 %
2045+47.26	7111.24		

WALL 10 BOTTOM OF WALL TABLE

STATION	ELEVATION	SEGMENT LENGTH	SLOPE
2045+05.00	7111.38	5.90 FT.	-82.75 %
2045+10.90	7106.50		
2045+10.90	7106.50	8.05 FT.	-82.75 %
2045+18.95	7099.84		
2045+18.95	7099.84	5.00 FT.	0.00 %
2045+23.95	7099.84		
2045+23.95	7099.84	7.28 FT.	0.00 %
2045+31.23	7099.84		
2045+31.23	7099.84	5.00 FT.	0.00 %
2045+36.23	7099.84		
2045+36.23	7099.84	11.03 FT.	80.71 %
2045+47.26	7108.74		

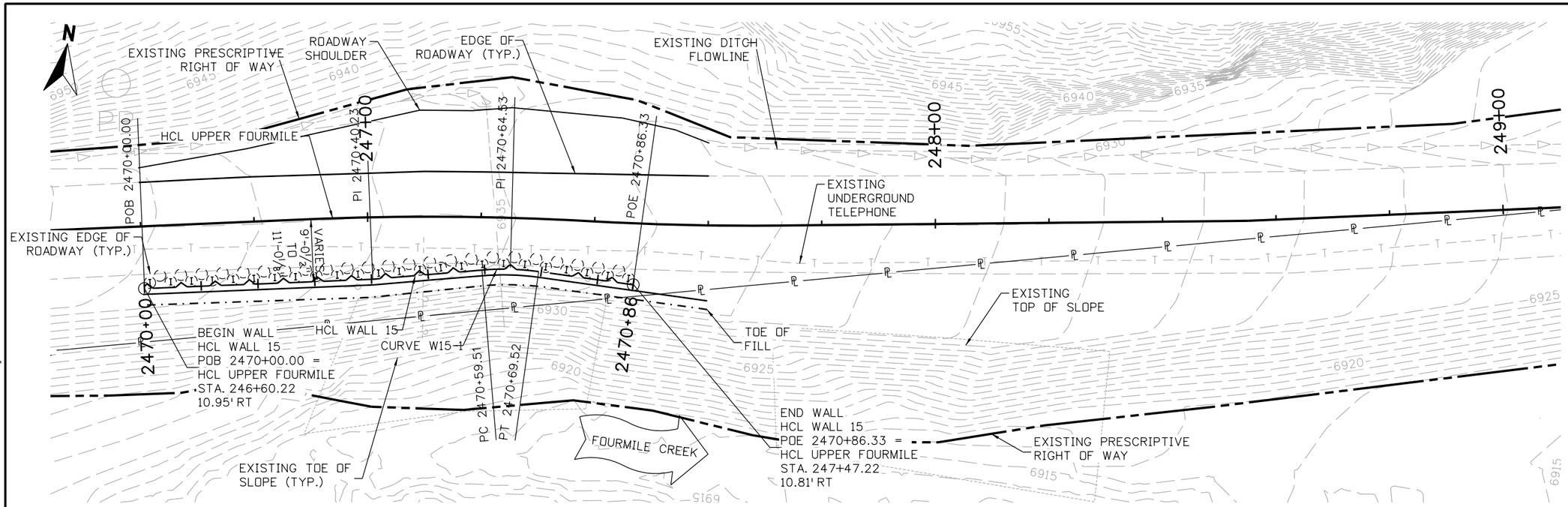

PLAN

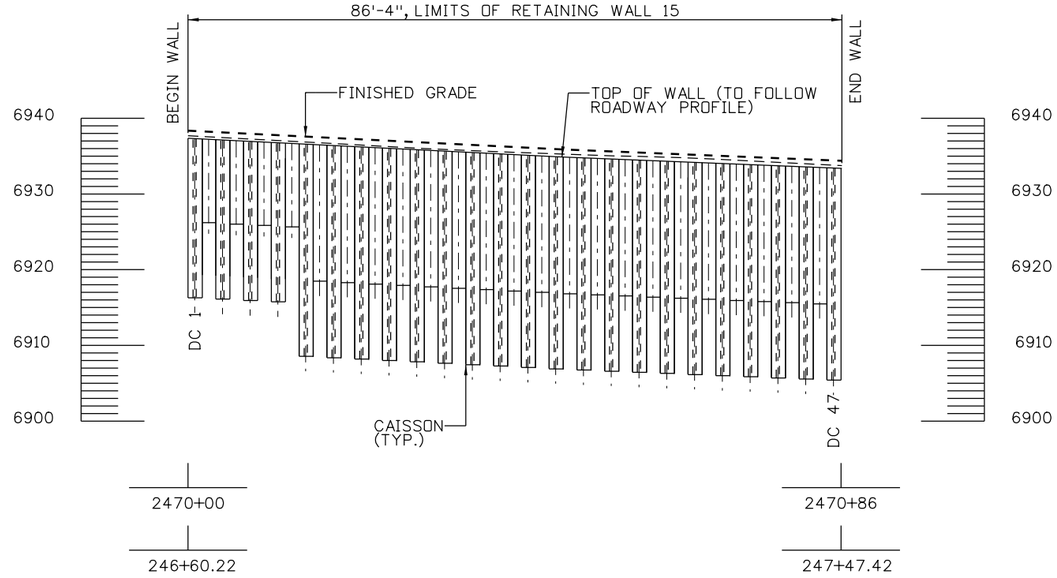

DEVELOPED ELEVATION

TAKEN AT HCL WALL

NOTES:

1. FOR FINISHED GRADING, REFER TO DRAINAGE PLANS.
2. FOR ROADWAY ALIGNMENT DATA, REFER TO ROADWAY PLANS.
3. FOR UTILITY INFORMATION, REFER TO UTILITY PLANS.

10 0 10 20 FT
HORIZONTAL SCALE: 1"=20'

90% SET

CALL UTILITY NOTIFICATION CENTER OF COLORADO
811
CALL 2-BUSINESS DAYS IN ADVANCE BEFORE YOU DIG, GRADE, OR EXCAVATE FOR THE MARKING OF UNDERGROUND MEMBER UTILITIES

REVISIONS:	NO.	DATE	REVISION DESCRIPTION:

Boulder County

BOULDER COUNTY TRANSPORTATION DEPARTMENT
ENGINEERING DIVISION

Michael Baker INTERNATIONAL

DESIGNED:	CAD:	CHECKED:	DATE:
MSC	DRH	DNB	03/25/16

UPPER FOURMILE CANYON DRIVE
GENERAL LAYOUT
RETAINING WALL 15 (1 OF 3)

PROJECT NO: 4041.SEPT12C37 | SHEET NO: 241

Daniel.Hawk 4:31:47 PM pw:\\DCPWAPP1.bkr.mbakercorp.com:pwprod\Documents\Projects\Lakewood_Office\Boulder_County_Emergency_Transportation\T01\08_Sheet_Files\06_Structures\DGN\138366_Wall_25.dgn

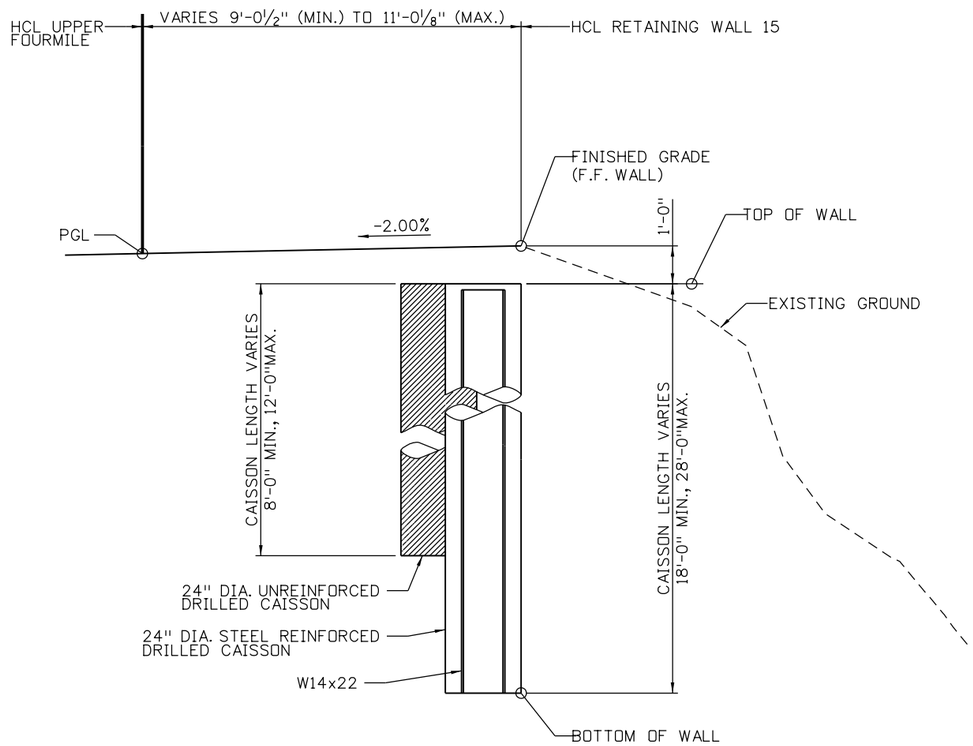

TYPICAL SECTION

LOOKING AHEAD STATION ALONG HCL WALL 15

DESIGN DATA:

AASHTO LRFD BRIDGE DESIGN SPECIFICATIONS, SEVENTH EDITION WITH INTERIMS THROUGH 2015

DESIGN METHOD:	LOAD AND RESISTANCE FACTOR DESIGN (LRFD)
LIVE LOAD:	HL-93 (DESIGN TRUCK OR DESIGN TANDEM, AND DESIGN LANE LOAD)

SEISMIC ZONE 1

REINFORCED CONCRETE:

CLASS D CONCRETE:	f'c=4,500 PSI
REINFORCING STEEL:	fy=60,000 PSI
SEVERITY OF SULFATE EXPOSURE:	CLASS 0

SOIL PROPERTIES:

ABOVE BOTTOM OF WALL:

SOIL UNIT WEIGHT:	120 PCF
SOIL FRICTION ANGLE:	32°
COHESION:	75 PSF
ACTIVE HORIZ. PRESSURE COEFFICIENT:	0.238

BELOW BOTTOM OF WALL:

SOIL UNIT WEIGHT:	130 PCF
SOIL FRICTION ANGLE:	35°
COHESION:	75 PSF
ACTIVE HORIZ. PRESSURE COEFFICIENT:	0.271
PASSIVE HORIZ. PRESSURE COEFFICIENT:	1.29

NOTES:

1. ROAD MAY BE CLOSED TO THRU-TRAFFIC DURING CONSTRUCTION, EXCEPT ACCESS TO ALL PRIVATE RESIDENCES SHALL REMAIN OPEN AT ALL TIMES. REFER TO PROJECT SPECIAL PROVISIONS FOR ADDITIONAL INFORMATION.
2. FOR ADDITIONAL WALL DETAILS, REFER TO CAISSON WALL DETAILS SHEET.
3. GEOTECHNICAL INFORMATION AND RECOMMENDATIONS CAN BE FOUND IN THE FINAL GEOTECHNICAL INVESTIGATION REPORT, UPPER FOURMILE DRIVE, JANUARY, 2016.

WALL 15 HORIZONTAL CONTROL LINE TABLE

CURVE NUMBER	POINT TYPE	STATION	NORTHING	EASTING	BEARING	DISTANCE	RADIUS	LENGTH	CURVE DELTA	CURVE DIRECTION
	POB	2470+00.00	257240.37	29435.17						
					N79° 14'42E	40.23 FT.				
	PI	2470+40.23	257247.88	29474.69						
					N76° 46'03E	19.28 FT.				
	PC	2470+59.51	257252.29	29493.46						
W15-1	PI	2470+64.53	257253.45	29498.35			45.00 FT.	10.01 FT.	12° 45'03"	RIGHT
	PT	2470+69.52	257253.49	29503.38						
					N89° 31'06E	16.81 FT.				
	POE	2470+86.33	257253.63	29520.19						

90% SET

CALL UTILITY NOTIFICATION CENTER OF COLORADO
811
CALL 2-BUSINESS DAYS IN ADVANCE BEFORE YOU DIG, GRADE, OR EXCAVATE FOR THE MARKING OF UNDERGROUND MEMBER UTILITIES

REVISIONS:	NO.	DATE	REVISION DESCRIPTION:

Boulder County
Michael Baker INTERNATIONAL

BOULDER COUNTY TRANSPORTATION DEPARTMENT
ENGINEERING DIVISION

DESIGNED:	CAD:	CHECKED:	DATE:
MSC	DRH	DNB	03/25/16

UPPER FOURMILE CANYON DRIVE
GENERAL LAYOUT
RETAINING WALL 15 (2 OF 3)

PROJECT NO: 4041.SEPT12C37 | SHEET NO: 242

Daniel.Hawk 2:03:00 PM pw:\\DCPWAPP1.bkr.mbakercorp.com:pwprod\Documents\Projects\Lakewood_Office\Boulder_County_Emergency_Transportation\T01\08_Sheet_Files\06_Structures\DGN\138366_Wall_26.dgn

WALL 15 DATA TABLE

DRILLED CAISSON NUMBER	NORTHING	EASTING	WALL HCL		UPPER FOURMILE RD. HCL		TOP OF WALL ELEVATION	TIP ELEVATION (1)	TOTAL CAISSON LENGTH (FT.) (1)
			STATION AT ℄ CAISSON	PLAN OFFSET AT ℄ CAISSON	STATION AT ℄ CAISSON	PLAN OFFSET AT ℄ CAISSON			
DC 1	257,241.54	29,435.96	2470+01.00	1.00 FT. LT.	246+61.22	9.96 FT. RT.	6937.29	6919.29	18.00 FT.
DC 2	257,243.03	29,437.55	2470+02.83	2.17 FT. LT.	246+63.06	8.79 FT. RT.	6937.20	6929.20	8.00 FT.
DC 3	257,242.23	29,439.57	2470+04.67	1.00 FT. LT.	246+64.89	9.96 FT. RT.	6937.11	6916.11	21.00 FT.
DC 4	257,243.72	29,441.15	2470+06.50	2.17 FT. LT.	246+66.72	8.80 FT. RT.	6937.02	6928.02	9.00 FT.
DC 5	257,242.91	29,443.17	2470+08.33	1.00 FT. LT.	246+68.55	9.97 FT. RT.	6936.93	6915.93	21.00 FT.
DC 6	257,244.40	29,444.75	2470+10.17	2.17 FT. LT.	246+70.39	8.81 FT. RT.	6936.83	6927.83	9.00 FT.
DC 7	257,243.60	29,446.77	2470+12.00	1.00 FT. LT.	246+72.22	9.98 FT. RT.	6936.74	6915.74	21.00 FT.
DC 8	257,245.08	29,448.35	2470+13.83	2.17 FT. LT.	246+74.06	8.81 FT. RT.	6936.65	6927.65	9.00 FT.
DC 9	257,244.28	29,450.37	2470+15.67	1.00 FT. LT.	246+75.89	9.98 FT. RT.	6936.56	6913.56	23.00 FT.
DC 10	257,245.77	29,451.96	2470+17.50	2.17 FT. LT.	246+77.72	8.82 FT. RT.	6936.47	6926.47	10.00 FT.
DC 11	257,244.96	29,453.98	2470+19.33	1.00 FT. LT.	246+79.55	9.99 FT. RT.	6936.37	6910.37	26.00 FT.
DC 12	257,246.45	29,455.56	2470+21.17	2.17 FT. LT.	246+81.39	8.83 FT. RT.	6936.28	6925.28	11.00 FT.
DC 13	257,245.65	29,457.58	2470+23.00	1.00 FT. LT.	246+83.22	10.00 FT. RT.	6936.19	6910.19	26.00 FT.
DC 14	257,247.14	29,459.16	2470+24.83	2.17 FT. LT.	246+85.06	8.83 FT. RT.	6936.10	6925.10	11.00 FT.
DC 15	257,246.33	29,461.18	2470+26.67	1.00 FT. LT.	246+86.89	10.00 FT. RT.	6936.01	6908.01	28.00 FT.
DC 16	257,247.82	29,462.76	2470+28.50	2.17 FT. LT.	246+88.72	8.84 FT. RT.	6935.91	6923.91	12.00 FT.
DC 17	257,247.02	29,464.78	2470+30.33	1.00 FT. LT.	246+90.57	10.01 FT. RT.	6935.82	6907.82	28.00 FT.
DC 18	257,248.51	29,466.37	2470+32.17	2.17 FT. LT.	246+92.44	8.84 FT. RT.	6935.73	6923.73	12.00 FT.
DC 19	257,247.70	29,468.38	2470+34.00	1.00 FT. LT.	246+94.31	9.99 FT. RT.	6935.64	6907.64	28.00 FT.
DC 20	257,249.19	29,469.97	2470+35.83	2.17 FT. LT.	246+96.17	8.81 FT. RT.	6935.55	6923.55	12.00 FT.
DC 21	257,248.39	29,471.99	2470+37.67	1.00 FT. LT.	246+98.06	9.95 FT. RT.	6935.45	6907.45	28.00 FT.
DC 22	257,249.87	29,473.53	2470+39.46	2.17 FT. LT.	246+99.87	8.76 FT. RT.	6935.36	6924.36	11.00 FT.
DC 23	257,249.11	29,475.54	2470+41.33	1.00 FT. LT.	247+01.75	9.84 FT. RT.	6935.27	6909.27	26.00 FT.
DC 24	257,250.66	29,477.05	2470+43.17	2.17 FT. LT.	247+03.53	8.55 FT. RT.	6935.18	6924.18	11.00 FT.
DC 25	257,249.95	29,479.11	2470+45.00	1.00 FT. LT.	247+05.48	9.58 FT. RT.	6935.09	6909.09	26.00 FT.
DC 26	257,251.50	29,480.62	2470+46.83	2.17 FT. LT.	247+07.25	8.28 FT. RT.	6934.99	6923.99	11.00 FT.
DC 27	257,250.79	29,482.67	2470+48.67	1.00 FT. LT.	247+09.21	9.30 FT. RT.	6934.90	6908.90	26.00 FT.
DC 28	257,252.34	29,484.19	2470+50.50	2.17 FT. LT.	247+10.97	7.99 FT. RT.	6934.82	6923.82	11.00 FT.
DC 29	257,251.63	29,486.24	2470+52.33	1.00 FT. LT.	247+12.93	8.99 FT. RT.	6934.75	6906.75	28.00 FT.
DC 30	257,253.18	29,487.76	2470+54.17	2.17 FT. LT.	247+14.68	7.67 FT. RT.	6934.67	6922.67	12.00 FT.
DC 31	257,252.47	29,489.81	2470+56.00	1.00 FT. LT.	247+16.64	8.66 FT. RT.	6934.60	6906.60	28.00 FT.
DC 32	257,254.02	29,491.33	2470+57.84	2.17 FT. LT.	247+18.39	7.32 FT. RT.	6934.52	6922.52	12.00 FT.
DC 33	257,253.31	29,493.39	2470+59.67	1.00 FT. LT.	247+20.36	8.29 FT. RT.	6934.45	6906.45	28.00 FT.
DC 34	257,254.84	29,495.00	2470+61.50	2.17 FT. LT.	247+22.18	6.98 FT. RT.	6934.38	6922.38	12.00 FT.
DC 35	257,254.00	29,497.07	2470+63.33	1.00 FT. LT.	247+24.16	8.06 FT. RT.	6934.30	6906.30	28.00 FT.
DC 36	257,255.40	29,498.81	2470+65.17	2.17 FT. LT.	247+26.08	6.88 FT. RT.	6934.23	6922.23	12.00 FT.
DC 37	257,254.39	29,500.79	2470+67.00	1.00 FT. LT.	247+27.97	8.10 FT. RT.	6934.15	6906.15	28.00 FT.
DC 38	257,255.64	29,502.62	2470+68.82	2.17 FT. LT.	247+29.95	7.06 FT. RT.	6934.08	6922.08	12.00 FT.
DC 39	257,254.50	29,504.52	2470+70.67	1.00 FT. LT.	247+31.74	8.40 FT. RT.	6934.00	6906.00	28.00 FT.
DC 40	257,255.68	29,506.34	2470+72.50	2.17 FT. LT.	247+33.71	7.42 FT. RT.	6933.93	6921.93	12.00 FT.
DC 41	257,254.53	29,508.18	2470+74.33	1.00 FT. LT.	247+35.46	8.75 FT. RT.	6933.86	6905.86	28.00 FT.
DC 42	257,255.71	29,510.01	2470+76.17	2.17 FT. LT.	247+37.42	7.74 FT. RT.	6933.78	6921.78	12.00 FT.
DC 43	257,254.56	29,511.85	2470+78.00	1.00 FT. LT.	247+39.17	9.06 FT. RT.	6933.71	6905.71	28.00 FT.
DC 44	257,255.74	29,513.67	2470+79.83	2.17 FT. LT.	247+41.06	8.05 FT. RT.	6933.63	6921.63	12.00 FT.
DC 45	257,254.59	29,515.52	2470+81.67	1.00 FT. LT.	247+42.76	9.37 FT. RT.	6933.56	6905.56	28.00 FT.
DC 46	257,255.77	29,517.34	2470+83.50	2.17 FT. LT.	247+44.66	8.38 FT. RT.	6933.48	6921.48	12.00 FT.
DC 47	257,254.62	29,519.18	2470+85.33	1.00 FT. LT.	247+46.34	9.72 FT. RT.	6933.41	6905.41	28.00 FT.

KEYNOTES:

(1) SUBSURFACE STRATA UNKNOWN. CAISSON LENGTHS AND TIP ELEVATIONS ARE BASED ON THE ASSUMPTION THAT BEDROCK WILL NOT BE ENCOUNTERED. IF BEDROCK IS ENCOUNTERED, EMBED CAISSION A MINIMUM OF 5 FEET INTO BEDROCK AND ADJUST THE PILE LENGTH ACCORDINGLY.

90% SET

CALL UTILITY NOTIFICATION CENTER OF COLORADO
811
CALL 2-BUSINESS DAYS IN ADVANCE BEFORE YOU DIG, GRADE, OR EXCAVATE FOR THE MARKING OF UNDERGROUND MEMBER UTILITIES

REVISIONS:	NO.	DATE	REVISION DESCRIPTION:

Boulder County

Michael Baker INTERNATIONAL

BOULDER COUNTY TRANSPORTATION DEPARTMENT
ENGINEERING DIVISION

DESIGNED:	CAD:	CHECKED:	DATE:
MSC	DRH	DNB	03/25/16

UPPER FOURMILE CANYON DRIVE
GENERAL LAYOUT
RETAINING WALL 15 (3 OF 3)

PROJECT NO: 4041.SEPT12C37 | SHEET NO: 243

Daniel.Hawk 2:03:18 PM pw:\\DCPWAPP1.bkr.mbakercorp.com:pwprod\Documents\Projects\Lakewood_Office\Boulder_County_Emergency_Transportation\T01\08_Sheet_Files\06_Structures\DGN\138366_Wall_27.dgn

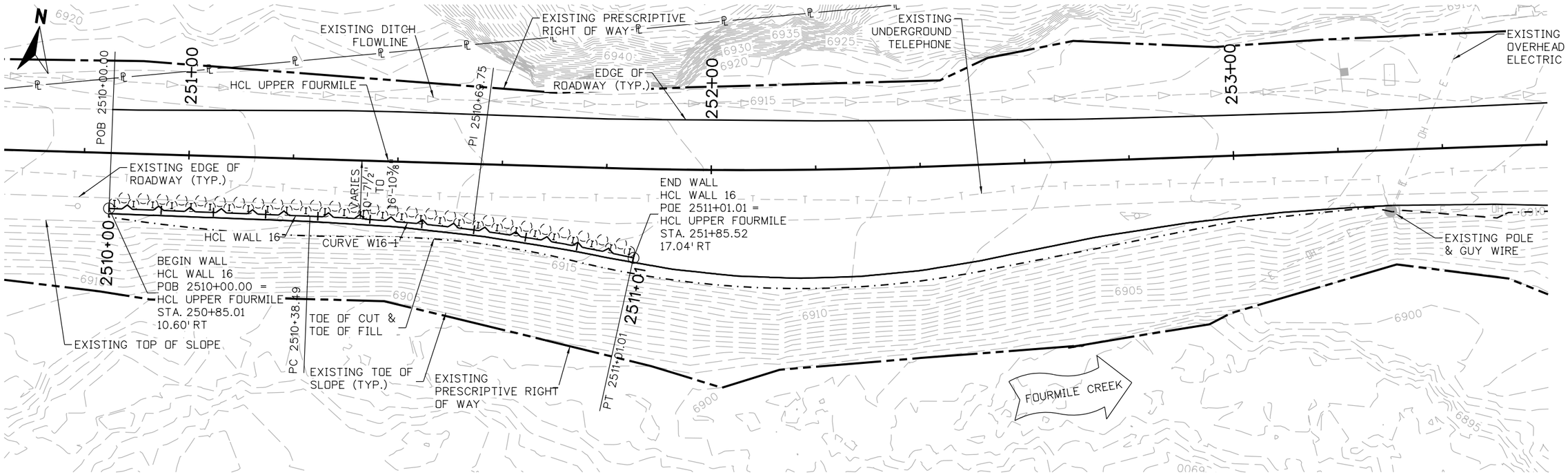

PLAN

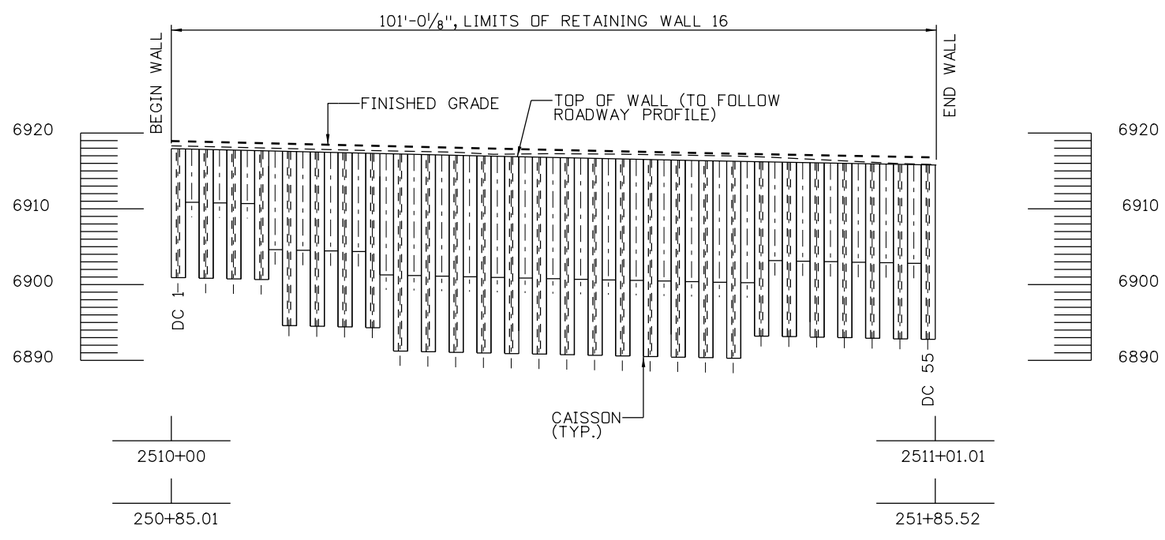

DEVELOPED ELEVATION

TAKEN AT HCL WALL

NOTES:

1. FOR FINISHED GRADING, REFER TO DRAINAGE PLANS.
2. FOR ROADWAY ALIGNMENT DATA, REFER TO ROADWAY PLANS.
3. FOR UTILITY INFORMATION, REFER TO UTILITY PLANS.

10 0 10 20 FT
HORIZONTAL SCALE: 1"=20'

90% SET

CALL UTILITY NOTIFICATION CENTER OF COLORADO
811
CALL 2-BUSINESS DAYS IN ADVANCE BEFORE YOU DIG, GRADE, OR EXCAVATE FOR THE MARKING OF UNDERGROUND MEMBER UTILITIES

REVISIONS:	NO.	DATE	REVISION DESCRIPTION:

Boulder County

Michael Baker INTERNATIONAL

BOULDER COUNTY TRANSPORTATION DEPARTMENT
ENGINEERING DIVISION

DESIGNED:	CAD:	CHECKED:	DATE:
MSC	DRH	DNB	03/25/16

UPPER FOURMILE CANYON DRIVE
GENERAL LAYOUT
RETAINING WALL 16 (1 OF 3)

PROJECT NO: 4041.SEPT12C37 SHEET NO: 244

Daniel.Hawk 4:32:14 PM pw:\\DCPWAPP1.bkr.mbakercorp.com:pwprod\Documents\Projects\Lakewood_Office\Boulder_County_Emergency_Transportation\T01\08_Sheet_Files\06_Structures\DGN\138366_Wall_28.dgn

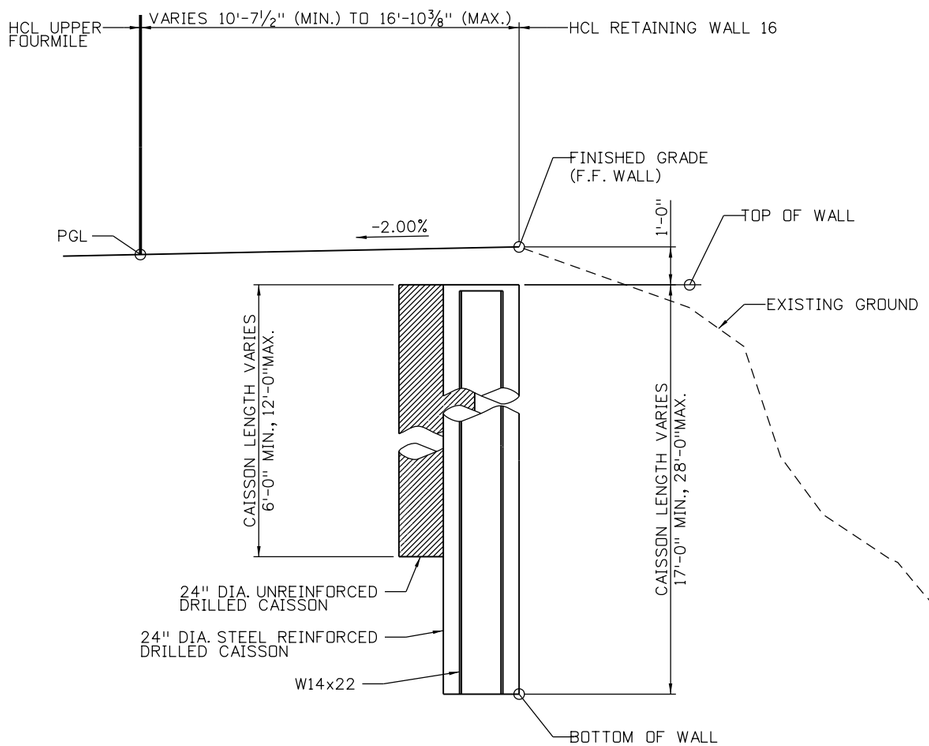

TYPICAL SECTION

LOOKING AHEAD STATION ALONG HCL WALL 16

DESIGN DATA:

AASHTO LRFD BRIDGE DESIGN SPECIFICATIONS, SEVENTH EDITION WITH INTERIMS THROUGH 2015

DESIGN METHOD:	LOAD AND RESISTANCE FACTOR DESIGN (LRFD)
LIVE LOAD:	HL-93 (DESIGN TRUCK OR DESIGN TANDEM, AND DESIGN LANE LOAD)

SEISMIC ZONE 1

REINFORCED CONCRETE:

CLASS D CONCRETE:	f'c=4,500 PSI
REINFORCING STEEL:	fy=60,000 PSI
SEVERITY OF SULFATE EXPOSURE:	CLASS 0

SOIL PROPERTIES:

ABOVE BOTTOM OF WALL:

SOIL UNIT WEIGHT:	120 PCF
SOIL FRICTION ANGLE:	32°
COHESION:	75 PSF
ACTIVE HORIZ. PRESSURE COEFFICIENT:	0.238

BELOW BOTTOM OF WALL:

SOIL UNIT WEIGHT:	130 PCF
SOIL FRICTION ANGLE:	35°
COHESION:	75 PSF
ACTIVE HORIZ. PRESSURE COEFFICIENT:	0.271
PASSIVE HORIZ. PRESSURE COEFFICIENT:	1.29

NOTES:

1. ROAD MAY BE CLOSED TO THRU-TRAFFIC DURING CONSTRUCTION, EXCEPT ACCESS TO ALL PRIVATE RESIDENCES SHALL REMAIN OPEN AT ALL TIMES. REFER TO PROJECT SPECIAL PROVISIONS FOR ADDITIONAL INFORMATION.
2. FOR ADDITIONAL WALL DETAILS, REFER TO CAISSON WALL DETAILS SHEET.
3. GEOTECHNICAL INFORMATION AND RECOMMENDATIONS CAN BE FOUND IN THE FINAL GEOTECHNICAL INVESTIGATION REPORT, UPPER FOURMILE DRIVE, JANUARY, 2016.

WALL 16 HORIZONTAL CONTROL LINE TABLE

CURVE NUMBER	POINT TYPE	STATION	NORTHING	EASTING	BEARING	DISTANCE	RADIUS	LENGTH	CURVE DELTA	CURVE DIRECTION
	POB	2510+00.00	257307.66	29853.58						
					N83° 48'28E	38.49 FT.				
	PC	2510+38.49	257311.81	29891.84						
W16-1	PI	2510+69.75	257315.19	29923.01			350.00 FT.	62.52 FT.	10° 14'05"	RIGHT
	PT	2511+01.01	257312.98	29954.28						

90% SET

CALL UTILITY NOTIFICATION CENTER OF COLORADO
811
CALL 2-BUSINESS DAYS IN ADVANCE BEFORE YOU DIG, GRADE, OR EXCAVATE FOR THE MARKING OF UNDERGROUND MEMBER UTILITIES

REVISIONS: NO.	DATE	REVISION DESCRIPTION:

Boulder County

BOULDER COUNTY TRANSPORTATION DEPARTMENT
ENGINEERING DIVISION

Michael Baker INTERNATIONAL

DESIGNED:	CAD:	CHECKED:	DATE:
MSC	DRH	DNB	03/25/16

UPPER FOURMILE CANYON DRIVE
GENERAL LAYOUT
RETAINING WALL 16 (2 OF 3)

PROJECT NO: 4041.SEPT12C37 | SHEET NO: 245

Daniel.Hawk 2:04:13 PM pw:\\DCPWAPP1bkr.mbakercorp.com:pwprod\Documents\Projects\Lakewood_Office\Boulder_County_Emergency_Transportation\TOT\08_Sheet_Files\06_Structures\DGN\138366_Wall_29.dgn

WALL 16 DATA TABLE

DRILLED CAISSON NUMBER	NORTHING	EASTING	WALL HCL		UPPER FOURMILE RD. HCL		TOP OF WALL ELEVATION	TIP ELEVATION (1)	TOTAL CAISSON LENGTH (FT.) (1)
			STATION AT ℄ CAISSON	PLAN OFFSET AT ℄ CAISSON	STATION AT ℄ CAISSON	PLAN OFFSET AT ℄ CAISSON			
DC 1	257,308.76	29,854.47	2510+01.00	1.00 FT. LT.	250+86.01	9.61 FT. RT.	6917.85	6900.85	17.00 FT.
DC 2	257,310.12	29,856.17	2510+02.83	2.17 FT. LT.	250+87.86	8.46 FT. RT.	6917.81	6911.81	6.00 FT.
DC 3	257,309.16	29,858.11	2510+04.67	1.00 FT. LT.	250+89.68	9.64 FT. RT.	6917.76	6900.76	17.00 FT.
DC 4	257,310.52	29,859.81	2510+06.50	2.17 FT. LT.	250+91.52	8.49 FT. RT.	6917.72	6911.72	6.00 FT.
DC 5	257,309.55	29,861.76	2510+08.33	1.00 FT. LT.	250+93.35	9.67 FT. RT.	6917.68	6900.68	17.00 FT.
DC 6	257,310.91	29,863.46	2510+10.17	2.17 FT. LT.	250+95.19	8.52 FT. RT.	6917.63	6910.63	7.00 FT.
DC 7	257,309.95	29,865.40	2510+12.00	1.00 FT. LT.	250+97.01	9.70 FT. RT.	6917.59	6899.59	18.00 FT.
DC 8	257,311.31	29,867.10	2510+13.83	2.17 FT. LT.	250+98.86	8.55 FT. RT.	6917.55	6909.55	8.00 FT.
DC 9	257,310.34	29,869.05	2510+15.67	1.00 FT. LT.	251+00.68	9.73 FT. RT.	6917.51	6896.51	21.00 FT.
DC 10	257,311.70	29,870.75	2510+17.50	2.17 FT. LT.	251+02.52	8.58 FT. RT.	6917.46	6908.46	9.00 FT.
DC 11	257,310.74	29,872.70	2510+19.33	1.00 FT. LT.	251+04.35	9.76 FT. RT.	6917.42	6894.42	23.00 FT.
DC 12	257,312.10	29,874.39	2510+21.17	2.17 FT. LT.	251+06.19	8.61 FT. RT.	6917.38	6907.38	10.00 FT.
DC 13	257,311.14	29,876.34	2510+23.00	1.00 FT. LT.	251+08.01	9.79 FT. RT.	6917.34	6894.34	23.00 FT.
DC 14	257,312.49	29,878.04	2510+24.83	2.17 FT. LT.	251+09.86	8.64 FT. RT.	6917.29	6907.29	10.00 FT.
DC 15	257,311.53	29,879.99	2510+26.67	1.00 FT. LT.	251+11.68	9.83 FT. RT.	6917.25	6891.25	26.00 FT.
DC 16	257,312.89	29,881.68	2510+28.50	2.17 FT. LT.	251+13.52	8.67 FT. RT.	6917.21	6906.21	11.00 FT.
DC 17	257,311.93	29,883.63	2510+30.33	1.00 FT. LT.	251+15.35	9.86 FT. RT.	6917.16	6891.16	26.00 FT.
DC 18	257,313.28	29,885.33	2510+32.17	2.17 FT. LT.	251+17.19	8.71 FT. RT.	6917.12	6906.12	11.00 FT.
DC 19	257,312.32	29,887.28	2510+34.00	1.00 FT. LT.	251+19.01	9.89 FT. RT.	6917.08	6891.08	26.00 FT.
DC 20	257,313.68	29,888.97	2510+35.83	2.17 FT. LT.	251+20.86	8.74 FT. RT.	6917.04	6906.04	11.00 FT.
DC 21	257,312.72	29,890.92	2510+37.67	1.00 FT. LT.	251+22.68	9.92 FT. RT.	6916.99	6890.99	26.00 FT.
DC 22	257,314.07	29,892.63	2510+39.50	2.17 FT. LT.	251+24.53	8.77 FT. RT.	6916.95	6905.95	11.00 FT.
DC 23	257,313.10	29,894.58	2510+41.33	1.00 FT. LT.	251+26.35	9.96 FT. RT.	6916.91	6890.91	26.00 FT.
DC 24	257,314.44	29,896.30	2510+43.17	2.17 FT. LT.	251+28.22	8.83 FT. RT.	6916.87	6905.87	11.00 FT.
DC 25	257,313.45	29,898.24	2510+45.00	1.00 FT. LT.	251+30.03	10.04 FT. RT.	6916.83	6890.83	26.00 FT.
DC 26	257,314.77	29,899.97	2510+46.83	2.17 FT. LT.	251+31.91	8.93 FT. RT.	6916.79	6905.79	11.00 FT.
DC 27	257,313.76	29,901.90	2510+48.67	1.00 FT. LT.	251+33.71	10.16 FT. RT.	6916.75	6890.75	26.00 FT.
DC 28	257,315.06	29,903.65	2510+50.50	2.17 FT. LT.	251+35.59	9.07 FT. RT.	6916.71	6905.71	11.00 FT.
DC 29	257,314.03	29,905.57	2510+52.33	1.00 FT. LT.	251+37.38	10.32 FT. RT.	6916.67	6888.67	28.00 FT.
DC 30	257,315.32	29,907.33	2510+54.17	2.17 FT. LT.	251+39.28	9.25 FT. RT.	6916.63	6904.63	12.00 FT.
DC 31	257,314.26	29,909.24	2510+56.00	1.00 FT. LT.	251+41.05	10.51 FT. RT.	6916.59	6888.59	28.00 FT.
DC 32	257,315.53	29,911.01	2510+57.83	2.17 FT. LT.	251+42.96	9.46 FT. RT.	6916.55	6905.55	11.00 FT.
DC 33	257,314.46	29,912.91	2510+59.67	1.00 FT. LT.	251+44.72	10.75 FT. RT.	6916.52	6890.52	26.00 FT.
DC 34	257,315.70	29,914.70	2510+61.50	2.17 FT. LT.	251+46.64	9.72 FT. RT.	6916.48	6905.48	11.00 FT.
DC 35	257,314.61	29,916.58	2510+63.33	1.00 FT. LT.	251+48.39	11.02 FT. RT.	6916.44	6890.44	26.00 FT.
DC 36	257,315.84	29,918.38	2510+65.17	2.17 FT. LT.	251+50.32	10.01 FT. RT.	6916.40	6905.40	11.00 FT.
DC 37	257,314.73	29,920.26	2510+67.00	1.00 FT. LT.	251+52.05	11.33 FT. RT.	6916.36	6890.36	26.00 FT.
DC 38	257,315.94	29,922.07	2510+68.83	2.17 FT. LT.	251+53.99	10.34 FT. RT.	6916.32	6905.32	11.00 FT.
DC 39	257,314.81	29,923.94	2510+70.67	1.00 FT. LT.	251+55.71	11.68 FT. RT.	6916.28	6890.28	26.00 FT.
DC 40	257,316.00	29,925.76	2510+72.50	2.17 FT. LT.	251+57.66	10.71 FT. RT.	6916.25	6905.25	11.00 FT.
DC 41	257,314.85	29,927.61	2510+74.33	1.00 FT. LT.	251+59.37	12.07 FT. RT.	6916.21	6890.21	26.00 FT.
DC 42	257,316.02	29,929.45	2510+76.17	2.17 FT. LT.	251+61.33	11.12 FT. RT.	6916.18	6905.18	11.00 FT.
DC 43	257,314.85	29,931.29	2510+78.00	1.00 FT. LT.	251+63.02	12.49 FT. RT.	6916.14	6890.14	26.00 FT.
DC 44	257,316.00	29,933.14	2510+79.83	2.17 FT. LT.	251+64.99	11.56 FT. RT.	6916.11	6906.11	10.00 FT.
DC 45	257,314.81	29,934.97	2510+81.67	1.00 FT. LT.	251+66.67	12.96 FT. RT.	6916.07	6893.07	23.00 FT.
DC 46	257,315.95	29,936.83	2510+83.50	2.17 FT. LT.	251+68.65	12.05 FT. RT.	6916.04	6906.04	10.00 FT.
DC 47	257,314.74	29,938.64	2510+85.33	1.00 FT. LT.	251+70.31	13.46 FT. RT.	6916.00	6893.00	23.00 FT.
DC 48	257,315.85	29,940.52	2510+87.17	2.17 FT. LT.	251+72.30	12.57 FT. RT.	6915.97	6905.97	10.00 FT.
DC 49	257,314.62	29,942.32	2510+89.00	1.00 FT. LT.	251+73.95	14.00 FT. RT.	6915.93	6892.93	23.00 FT.
DC 50	257,315.72	29,944.20	2510+90.83	2.17 FT. LT.	251+75.95	13.13 FT. RT.	6915.90	6905.90	10.00 FT.
DC 51	257,314.47	29,945.99	2510+92.67	1.00 FT. LT.	251+77.58	14.58 FT. RT.	6915.86	6892.86	23.00 FT.
DC 52	257,315.54	29,947.89	2510+94.50	2.17 FT. LT.	251+79.59	13.73 FT. RT.	6915.83	6905.83	10.00 FT.
DC 53	257,314.28	29,949.66	2510+96.33	1.00 FT. LT.	251+81.18	15.20 FT. RT.	6915.79	6892.79	23.00 FT.
DC 54	257,315.34	29,951.56	2510+98.17	2.17 FT. LT.	251+83.15	14.37 FT. RT.	6915.76	6905.76	10.00 FT.
DC 55	257,314.05	29,953.33	2511+00.00	1.00 FT. LT.	251+84.73	15.87 FT. RT.	6915.72	6892.72	23.00 FT.

KEYNOTES:

(1) SUBSURFACE STRATA UNKNOWN. CAISSON LENGTHS AND TIP ELEVATIONS ARE BASED ON THE ASSUMPTION THAT BEDROCK WILL NOT BE ENCOUNTERED. IF BEDROCK IS ENCOUNTERED, EMBED CAISSION A MINIMUM OF 5 FEET INTO BEDROCK AND ADJUST THE PILE LENGTH ACCORDINGLY.

90% SET

CALL UTILITY NOTIFICATION CENTER OF COLORADO
811
CALL 2-BUSINESS DAYS IN ADVANCE BEFORE YOU DIG, GRADE, OR EXCAVATE FOR THE MARKING OF UNDERGROUND MEMBER UTILITIES

REVISIONS: NO.	DATE	REVISION DESCRIPTION:

Boulder County

Michael Baker INTERNATIONAL

BOULDER COUNTY TRANSPORTATION DEPARTMENT
ENGINEERING DIVISION

DESIGNED:	CAD:	CHECKED:	DATE:
MSC	DRH	DNB	03/25/16

UPPER FOURMILE CANYON DRIVE
GENERAL LAYOUT
RETAINING WALL 16 (3 OF 3)

PROJECT NO: 4041.SEPT12C37 | SHEET NO: 246

Daniel.Hawk 2:04:31 PM pw:\\DCPWAPP1.bkr.mbakercorp.com:pwprod\Documents\Projects\Lakewood_Office\Boulder_County_Emergency_Transportation\T01\08_Sheet_Files\06_Structures\DGN\138366_Wall_30.dgn

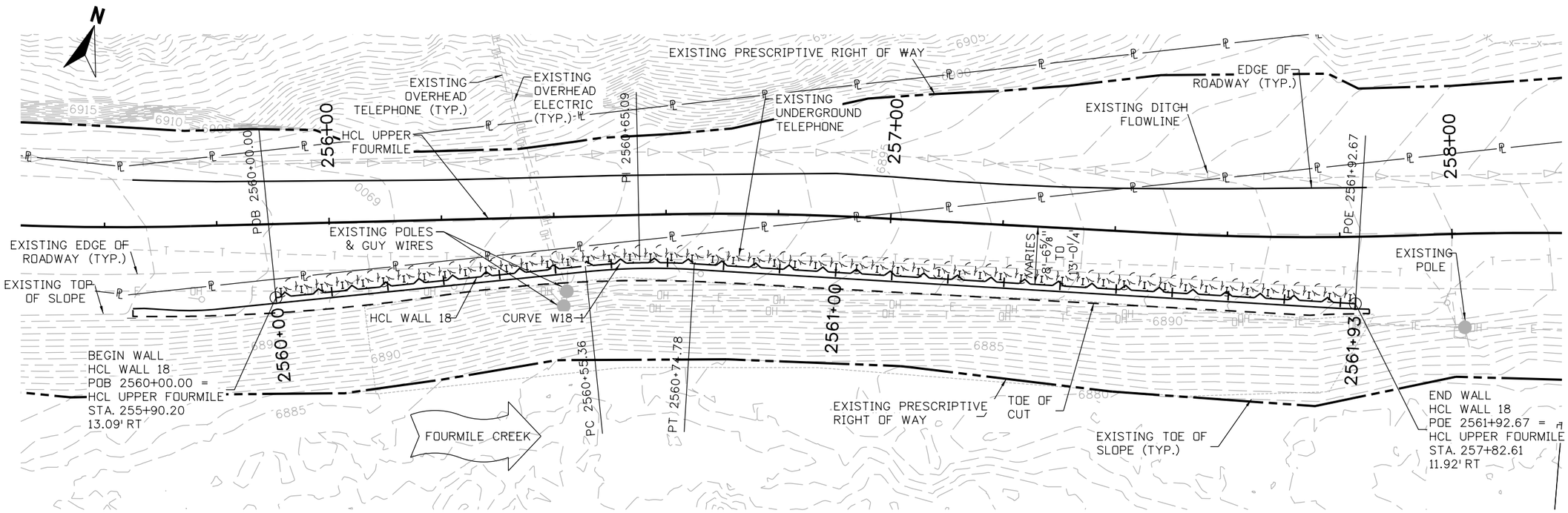

PLAN

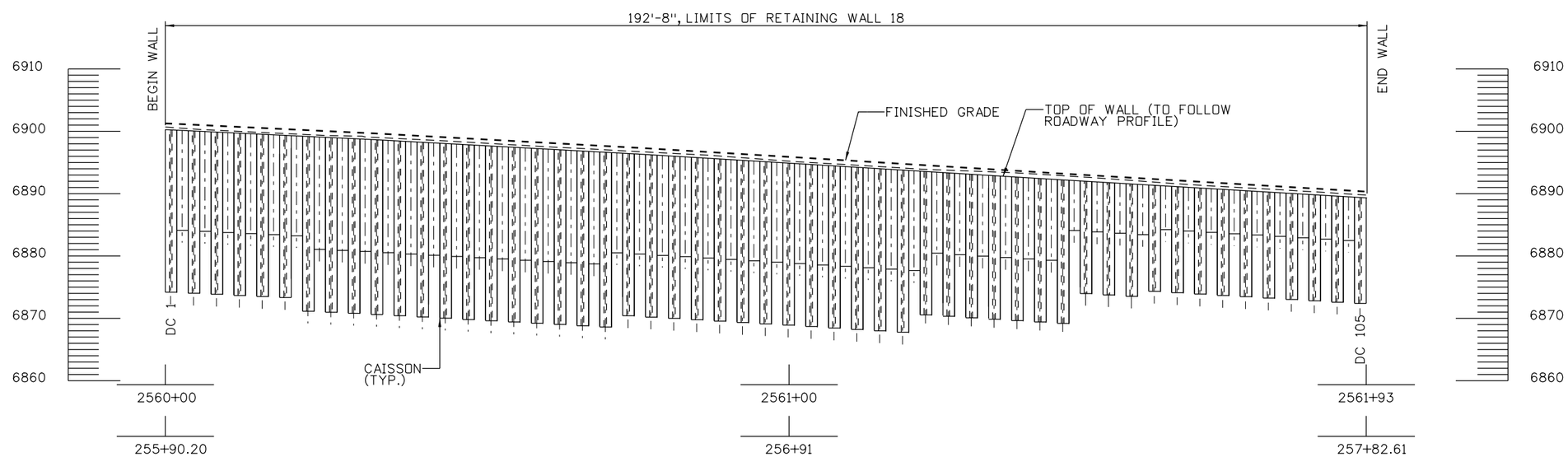

DEVELOPED ELEVATION

TAKEN AT HCL WALL

10 0 10 20 FT
HORIZONTAL SCALE: 1"=20'

NOTES:

1. FOR FINISHED GRADING, REFER TO DRAINAGE PLANS.
2. FOR ROADWAY ALIGNMENT DATA, REFER TO ROADWAY PLANS.
3. FOR UTILITY INFORMATION, REFER TO UTILITY PLANS.

90% SET

CALL UTILITY NOTIFICATION CENTER OF COLORADO
811
CALL 2-BUSINESS DAYS IN ADVANCE BEFORE YOU DIG, GRADE, OR EXCAVATE FOR THE MARKING OF UNDERGROUND MEMBER UTILITIES

REVISIONS: NO.	DATE	REVISION DESCRIPTION:

Boulder County

Michael Baker INTERNATIONAL

BOULDER COUNTY TRANSPORTATION DEPARTMENT
ENGINEERING DIVISION

DESIGNED:	CAD:	CHECKED:	DATE:
MSC	DRH	DNB	03/25/16

UPPER FOURMILE CANYON DRIVE
GENERAL LAYOUT
RETAINING WALL 18 (1 OF 3)

PROJECT NO: 4041.SEPT12C37 SHEET NO: 247

Daniel.Hawk 4:32:41 PM pw:\\DCPWAPP1.bkr.mbakercorp.com:pwprod\Documents\Projects\Lakewood_Office\Boulder_County_Emergency_Transportation\T01\08_Sheet_Files\06_Structures\DGN\138366_Wall_31.dgn

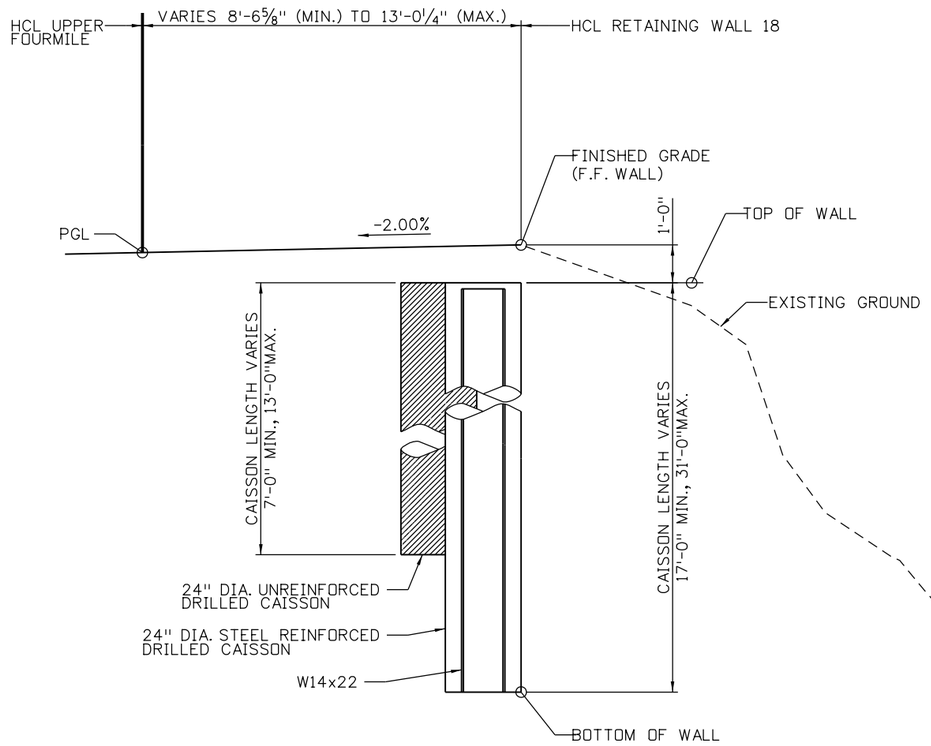

TYPICAL SECTION

LOOKING AHEAD STATION ALONG HCL WALL 18

DESIGN DATA:

AASHTO LRFD BRIDGE DESIGN SPECIFICATIONS, SEVENTH EDITION WITH INTERIMS THROUGH 2015

DESIGN METHOD:	LOAD AND RESISTANCE FACTOR DESIGN (LRFD)
LIVE LOAD:	HL-93 (DESIGN TRUCK OR DESIGN TANDEM, AND DESIGN LANE LOAD)

SEISMIC ZONE 1

REINFORCED CONCRETE:

CLASS D CONCRETE:	f'c=4,500 PSI
REINFORCING STEEL:	fy=60,000 PSI
SEVERITY OF SULFATE EXPOSURE:	CLASS 0

SOIL PROPERTIES:

ABOVE BOTTOM OF WALL:

SOIL UNIT WEIGHT:	120 PCF
SOIL FRICTION ANGLE:	32°
COHESION:	75 PSF
ACTIVE HORIZ. PRESSURE COEFFICIENT:	0.238

BELOW BOTTOM OF WALL:

SOIL UNIT WEIGHT:	130 PCF
SOIL FRICTION ANGLE:	35°
COHESION:	75 PSF
ACTIVE HORIZ. PRESSURE COEFFICIENT:	0.271
PASSIVE HORIZ. PRESSURE COEFFICIENT:	1.29

NOTES:

1. ROAD MAY BE CLOSED TO THRU-TRAFFIC DURING CONSTRUCTION, EXCEPT ACCESS TO ALL PRIVATE RESIDENCES SHALL REMAIN OPEN AT ALL TIMES. REFER TO PROJECT SPECIAL PROVISIONS FOR ADDITIONAL INFORMATION.
2. FOR ADDITIONAL WALL DETAILS, REFER TO CAISSON WALL DETAILS SHEET.
3. GEOTECHNICAL INFORMATION AND RECOMMENDATIONS CAN BE FOUND IN THE FINAL GEOTECHNICAL INVESTIGATION REPORT, UPPER FOURMILE DRIVE, JANUARY, 2016.

WALL 18 HORIZONTAL CONTROL LINE TABLE

CURVE NUMBER	POINT TYPE	STATION	NORTHING	EASTING	BEARING	DISTANCE	RADIUS	LENGTH	CURVE DELTA	CURVE DIRECTION
	POB	2560+00.00	257398.41	30352.48						
					N66° 50'23E	55.36 FT.				
	PC	2560+55.36	257420.19	30403.38						
W18-1	PI	2560+65.09	257424.01	30412.32			120.00 FT.	19.42 FT.	9° 16'14"	RIGHT
	PT	2560+74.78	257426.35	30421.77						
					N76° 06'37E	117.89 FT.				
	POE	2561+92.67	257454.65	30536.21						

90% SET

CALL UTILITY NOTIFICATION CENTER OF COLORADO
811
CALL 2-BUSINESS DAYS IN ADVANCE BEFORE YOU DIG, GRADE, OR EXCAVATE FOR THE MARKING OF UNDERGROUND MEMBER UTILITIES

REVISIONS: NO.	DATE	REVISION DESCRIPTION:

Boulder County
Michael Baker INTERNATIONAL

BOULDER COUNTY TRANSPORTATION DEPARTMENT
ENGINEERING DIVISION

DESIGNED:	CAD:	CHECKED:	DATE:
MSC	DRH	DNB	03/25/16

UPPER FOURMILE CANYON DRIVE
GENERAL LAYOUT
RETAINING WALL 18 (2 OF 3)

PROJECT NO: 4041.SEPT12C37 | SHEET NO: 248

Daniel.Hawk 3:09:26 PM pw:\\DCPWAPP1.bkr.mbakercorp.com:pwprod\Documents\Projects\Lakewood_Office\Boulder_County_Emergency_Transportation\T01\08_Sheet_Files\06_Structures\DGN\138366_Wall_32.dgn

WALL 18 DATA TABLE

DRILLED CAISSON NUMBER	NORTHING	EASTING	WALL HCL		UPPER FOURMILE RD. HCL		TOP OF WALL ELEVATION	TIP ELEVATION (1)	TOTAL CAISSON LENGTH (FT.) (1)
			STATION AT ℄ CAISSON	PLAN OFFSET AT ℄ CAISSON	STATION AT ℄ CAISSON	PLAN OFFSET AT ℄ CAISSON			
DC 1	257,399.72	30,353.00	2560+01.00	1.00 FT. LT.	255+91.12	12.02 FT. RT.	6900.21	6874.21	26.00 FT.
DC 2	257,401.52	30,354.23	2560+02.83	2.17 FT. LT.	255+92.86	10.72 FT. RT.	6900.12	6889.12	11.00 FT.
DC 3	257,401.17	30,356.37	2560+04.67	1.00 FT. LT.	255+94.77	11.74 FT. RT.	6900.03	6874.03	26.00 FT.
DC 4	257,402.96	30,357.60	2560+06.50	2.17 FT. LT.	255+96.51	10.44 FT. RT.	6899.94	6888.94	11.00 FT.
DC 5	257,402.61	30,359.75	2560+08.33	1.00 FT. LT.	255+98.43	11.46 FT. RT.	6899.86	6873.86	26.00 FT.
DC 6	257,404.40	30,360.97	2560+10.17	2.17 FT. LT.	256+00.17	10.16 FT. RT.	6899.77	6888.77	11.00 FT.
DC 7	257,404.05	30,363.12	2560+12.00	1.00 FT. LT.	256+02.09	11.18 FT. RT.	6899.68	6873.68	26.00 FT.
DC 8	257,405.84	30,364.34	2560+13.83	2.17 FT. LT.	256+03.83	9.88 FT. RT.	6899.59	6888.59	11.00 FT.
DC 9	257,405.49	30,366.49	2560+15.67	1.00 FT. LT.	256+05.74	10.90 FT. RT.	6899.50	6873.50	26.00 FT.
DC 10	257,407.29	30,367.72	2560+17.50	2.17 FT. LT.	256+07.48	9.60 FT. RT.	6899.42	6888.42	11.00 FT.
DC 11	257,406.93	30,369.86	2560+19.33	1.00 FT. LT.	256+09.40	10.62 FT. RT.	6899.33	6873.33	26.00 FT.
DC 12	257,408.73	30,371.09	2560+21.17	2.17 FT. LT.	256+11.14	9.32 FT. RT.	6899.24	6888.24	11.00 FT.
DC 13	257,408.38	30,373.23	2560+23.00	1.00 FT. LT.	256+13.05	10.34 FT. RT.	6899.15	6871.15	28.00 FT.
DC 14	257,410.17	30,374.46	2560+24.83	2.17 FT. LT.	256+14.79	9.04 FT. RT.	6899.06	6887.06	12.00 FT.
DC 15	257,409.82	30,376.60	2560+26.67	1.00 FT. LT.	256+16.71	10.06 FT. RT.	6898.98	6870.98	28.00 FT.
DC 16	257,411.61	30,377.83	2560+28.50	2.17 FT. LT.	256+18.45	8.76 FT. RT.	6898.89	6886.89	12.00 FT.
DC 17	257,411.26	30,379.97	2560+30.33	1.00 FT. LT.	256+20.37	9.79 FT. RT.	6898.80	6870.80	28.00 FT.
DC 18	257,413.05	30,381.20	2560+32.17	2.17 FT. LT.	256+22.11	8.48 FT. RT.	6898.71	6886.71	12.00 FT.
DC 19	257,412.70	30,383.34	2560+34.00	1.00 FT. LT.	256+24.02	9.51 FT. RT.	6898.62	6870.62	28.00 FT.
DC 20	257,414.50	30,384.57	2560+35.83	2.17 FT. LT.	256+25.76	8.20 FT. RT.	6898.52	6886.52	12.00 FT.
DC 21	257,414.15	30,386.72	2560+37.67	1.00 FT. LT.	256+27.68	9.23 FT. RT.	6898.42	6870.42	28.00 FT.
DC 22	257,415.94	30,387.94	2560+39.50	2.17 FT. LT.	256+29.42	7.92 FT. RT.	6898.32	6886.32	12.00 FT.
DC 23	257,415.59	30,390.09	2560+41.33	1.00 FT. LT.	256+31.33	8.95 FT. RT.	6898.22	6870.22	28.00 FT.
DC 24	257,417.38	30,391.31	2560+43.17	2.17 FT. LT.	256+33.07	7.64 FT. RT.	6898.12	6886.12	12.00 FT.
DC 25	257,417.03	30,393.46	2560+45.00	1.00 FT. LT.	256+34.99	8.67 FT. RT.	6898.02	6867.02	31.00 FT.
DC 26	257,418.82	30,394.68	2560+46.83	2.17 FT. LT.	256+36.73	7.36 FT. RT.	6897.92	6884.92	13.00 FT.
DC 27	257,418.47	30,396.83	2560+48.67	1.00 FT. LT.	256+38.65	8.39 FT. RT.	6897.82	6866.82	31.00 FT.
DC 28	257,420.27	30,398.06	2560+50.50	2.17 FT. LT.	256+40.39	7.08 FT. RT.	6897.72	6885.72	12.00 FT.
DC 29	257,419.91	30,400.20	2560+52.33	1.00 FT. LT.	256+42.30	8.11 FT. RT.	6897.62	6869.62	28.00 FT.
DC 30	257,421.71	30,401.43	2560+54.17	2.17 FT. LT.	256+44.04	6.81 FT. RT.	6897.52	6885.52	12.00 FT.
DC 31	257,421.36	30,403.58	2560+56.00	1.00 FT. LT.	256+45.96	7.83 FT. RT.	6897.42	6869.42	28.00 FT.
DC 32	257,423.14	30,404.85	2560+57.83	2.17 FT. LT.	256+47.74	6.55 FT. RT.	6897.32	6885.32	12.00 FT.
DC 33	257,422.74	30,407.01	2560+59.67	1.00 FT. LT.	256+49.66	7.62 FT. RT.	6897.22	6869.22	28.00 FT.
DC 34	257,424.49	30,408.33	2560+61.50	2.17 FT. LT.	256+51.47	6.40 FT. RT.	6897.12	6885.12	12.00 FT.
DC 35	257,424.02	30,410.47	2560+63.33	1.00 FT. LT.	256+53.35	7.53 FT. RT.	6897.02	6869.02	28.00 FT.
DC 36	257,425.72	30,411.85	2560+65.17	2.17 FT. LT.	256+55.21	6.36 FT. RT.	6896.92	6884.92	12.00 FT.
DC 37	257,425.19	30,413.98	2560+67.00	1.00 FT. LT.	256+57.05	7.55 FT. RT.	6896.82	6868.82	28.00 FT.
DC 38	257,426.85	30,415.41	2560+68.83	2.17 FT. LT.	256+58.96	6.44 FT. RT.	6896.71	6884.71	12.00 FT.
DC 39	257,426.25	30,417.52	2560+70.67	1.00 FT. LT.	256+60.80	7.67 FT. RT.	6896.61	6868.61	28.00 FT.
DC 40	257,427.87	30,419.00	2560+72.50	2.17 FT. LT.	256+62.74	6.60 FT. RT.	6896.51	6885.51	11.00 FT.
DC 41	257,427.21	30,421.09	2560+74.33	1.00 FT. LT.	256+64.55	7.88 FT. RT.	6896.41	6870.41	26.00 FT.
DC 42	257,428.78	30,422.59	2560+76.16	2.17 FT. LT.	256+66.49	6.84 FT. RT.	6896.31	6885.31	11.00 FT.
DC 43	257,428.09	30,424.66	2560+78.00	1.00 FT. LT.	256+68.27	8.12 FT. RT.	6896.21	6870.21	26.00 FT.
DC 44	257,429.66	30,426.16	2560+79.83	2.17 FT. LT.	256+70.20	7.07 FT. RT.	6896.10	6885.10	11.00 FT.
DC 45	257,428.97	30,428.21	2560+81.67	1.00 FT. LT.	256+71.99	8.34 FT. RT.	6895.99	6869.99	26.00 FT.
DC 46	257,430.54	30,429.71	2560+83.50	2.17 FT. LT.	256+73.91	7.28 FT. RT.	6895.88	6884.88	11.00 FT.
DC 47	257,429.85	30,431.77	2560+85.33	1.00 FT. LT.	256+75.71	8.53 FT. RT.	6895.77	6869.77	26.00 FT.
DC 48	257,431.42	30,433.27	2560+87.17	2.17 FT. LT.	256+77.63	7.46 FT. RT.	6895.66	6884.66	11.00 FT.
DC 49	257,430.73	30,435.33	2560+89.00	1.00 FT. LT.	256+79.44	8.70 FT. RT.	6895.56	6869.56	26.00 FT.
DC 50	257,432.31	30,436.83	2560+90.83	2.17 FT. LT.	256+81.35	7.61 FT. RT.	6895.45	6884.45	11.00 FT.
DC 51	257,431.61	30,438.89	2560+92.67	1.00 FT. LT.	256+83.17	8.84 FT. RT.	6895.34	6869.34	26.00 FT.
DC 52	257,433.19	30,440.39	2560+94.50	2.17 FT. LT.	256+85.07	7.73 FT. RT.	6895.23	6884.23	11.00 FT.
DC 53	257,432.49	30,442.45	2560+96.33	1.00 FT. LT.	256+86.90	8.95 FT. RT.	6895.12	6869.12	26.00 FT.

WALL 18 DATA TABLE CONTINUED

DRILLED CAISSON NUMBER	NORTHING	EASTING	WALL HCL		UPPER FOURMILE RD. HCL		TOP OF WALL ELEVATION	TIP ELEVATION (1)	TOTAL CAISSON LENGTH (FT.) (1)
			STATION AT ℄ CAISSON	PLAN OFFSET AT ℄ CAISSON	STATION AT ℄ CAISSON	PLAN OFFSET AT ℄ CAISSON			
DC 54	257,434.07	30,443.95	2560+98.17	2.17 FT. LT.	256+88.80	7.83 FT. RT.	6895.01	6884.01	11.00 FT.
DC 55	257,433.37	30,446.01	2561+00.00	1.00 FT. LT.	256+90.64	9.03 FT. RT.	6894.91	6868.91	26.00 FT.
DC 56	257,434.95	30,447.51	2561+01.83	2.17 FT. LT.	256+92.52	7.89 FT. RT.	6894.79	6883.79	11.00 FT.
DC 57	257,434.25	30,449.57	2561+03.67	1.00 FT. LT.	256+94.37	9.08 FT. RT.	6894.68	6868.68	26.00 FT.
DC 58	257,435.83	30,451.07	2561+05.50	2.17 FT. LT.	256+96.25	7.94 FT. RT.	6894.57	6883.57	11.00 FT.
DC 59	257,435.13	30,453.13	2561+07.33	1.00 FT. LT.	256+98.08	9.11 FT. RT.	6894.45	6868.45	26.00 FT.
DC 60	257,436.71	30,454.63	2561+09.17	2.17 FT. LT.	256+99.92	7.96 FT. RT.	6894.34	6883.34	11.00 FT.
DC 61	257,436.01	30,456.69	2561+11.00	1.00 FT. LT.	257+01.74	9.14 FT. RT.	6894.23	6868.23	26.00 FT.
DC 62	257,437.59	30,458.19	2561+12.83	2.17 FT. LT.	257+03.59	7.98 FT. RT.	6894.11	6883.11	11.00 FT.
DC 63	257,436.89	30,460.25	2561+14.67	1.00 FT. LT.	257+05.41	9.16 FT. RT.	6894.00	6868.00	26.00 FT.
DC 64	257,438.47	30,461.75	2561+16.50	2.17 FT. LT.	257+07.25	8.01 FT. RT.	6893.89	6882.89	11.00 FT.
DC 65	257,437.77	30,463.81	2561+18.33	1.00 FT. LT.	257+09.08	9.19 FT. RT.	6893.77	6867.77	26.00 FT.
DC 66	257,439.35	30,465.31	2561+20.17	2.17 FT. LT.	257+10.92	8.03 FT. RT.	6893.66	6882.66	11.00 FT.
DC 67	257,438.65	30,467.37	2561+22.00	1.00 FT. LT.	257+12.74	9.21 FT. RT.	6893.55	6867.55	26.00 FT.
DC 68	257,440.23	30,468.87	2561+23.83	2.17 FT. LT.	257+14.59	8.06 FT. RT.	6893.44	6883.44	10.00 FT.
DC 69	257,439.53	30,470.93	2561+25.67	1.00 FT. LT.	257+16.41	9.24 FT. RT.	6893.32	6870.32	23.00 FT.
DC 70	257,441.11	30,472.43	2561+27.50	2.17 FT. LT.	257+18.25	8.08 FT. RT.	6893.21	6883.21	10.00 FT.
DC 71	257,440.41	30,474.49	2561+29.33	1.00 FT. LT.	257+20.08	9.26 FT. RT.	6893.10	6870.10	23.00 FT.
DC 72	257,441.99	30,475.99	2561+31.17	2.17 FT. LT.	257+21.92	8.11 FT. RT.	6892.98	6882.98	10.00 FT.
DC 73	257,441.29	30,478.05	2561+33.00	1.00 FT. LT.	257+23.74	9.29 FT. RT.	6892.87	6869.87	23.00 FT.
DC 74	257,442.87	30,479.55	2561+34.83	2.17 FT. LT.	257+25.58	8.13 FT. RT.	6892.76	6883.76	9.00 FT.
DC 75	257,442.18	30,481.61	2561+36.67	1.00 FT. LT.	257+27.41	9.31 FT. RT.	6892.64	6871.64	21.00 FT.
DC 76	257,443.75	30,483.11	2561+38.50	2.17 FT. LT.	257+29.25	8.16 FT. RT.	6892.53	6883.53	9.00 FT.
DC 77	257,443.06	30,485.17	2561+40.33	1.00 FT. LT.	257+31.08	9.34 FT. RT.	6892.42	6871.42	21.00 FT.
DC 78	257,444.63	30,486.67	2561+42.17	2.17 FT. LT.	257+32.92	8.18 FT. RT.	6892.30	6883.30	9.00 FT.
DC 79	257,443.94	30,488.73	2561+44.00	1.00 FT. LT.	257+34.74	9.36 FT. RT.	6892.19	6871.19	21.00 FT.
DC 80	257,445.51	30,490.23	2561+45.83	2.17 FT. LT.	257+36.58	8.21 FT. RT.	6892.08	6884.08	8.00 FT.
DC 81	257,444.82	30,492.29	2561+47.67	1.00 FT. LT.	257+38.41	9.39 FT. RT.	6891.97	6873.97	18.00 FT.
DC 82	257,446.39	30,493.78	2561+49.50	2.17 FT. LT.	257+40.25	8.23 FT. RT.	6891.87	6883.87	8.00 FT.
DC 83	257,445.70	30,495.84	2561+51.33	1.00 FT. LT.	257+42.08	9.41 FT. RT.	6891.76	6873.76	18.00 FT.
DC 84	257,447.27	30,497.34	2561+53.17	2.17 FT. LT.	257+43.92	8.26 FT. RT.	6891.65	6883.65	8.00 FT.
DC 85	257,446.58	30,499.40	2561+55.00	1.00 FT. LT.	257+45.74	9.43 FT. RT.	6891.54	6873.54	18.00 FT.
DC 86	257,448.15	30,500.90	2561+56.83	2.17 FT. LT.	257+47.58	8.28 FT. RT.	6891.43	6883.43	8.00 FT.
DC 87	257,447.46	30,502.96	2561+58.67	1.00 FT. LT.	257+49.38	9.46 FT. RT.	6891.33	6873.33	18.00 FT.
DC 88	257,449.03	30,504.46	2561+60.50	2.17 FT. LT.	257+51.20	8.32 FT. RT.	6891.22	6884.22	7.00 FT.
DC 89	257,448.34	30,506.52	2561+62.33	1.00 FT. LT.	257+52.98	9.51 FT. RT.	6891.11	6874.11	17.00 FT.
DC 90	257,449.91	30,508.02	2561+64.17	2.17 FT. LT.	257+54.80	8.38 FT. RT.	6891.00	6884.00	7.00 FT.
DC 91	257,449.22	30,510.08	2561+66.00	1.00 FT. LT.	257+56.58	9.58 FT. RT.	6890.89	6873.89	17.00 FT.
DC 92	257,450.79	30,511.58	2561+67.83	2.17 FT. LT.	257+58.41	8.47 FT. RT.	6890.79	6883.79	7.00 FT.
DC 93	257,450.10	30,513.64	2561+69.67	1.00 FT. LT.	257+60.17	9.69 FT. RT.	6890.68	6873.68	17.00 FT.
DC 94	257,451.67	30,515.14	2561+71.50	2.17 FT. LT.	257+62.01	8.58 FT. RT.	6890.57	6883.57	7.00 FT.
DC 95	257,450.98	30,517.20	2561+73.33	1.00 FT. LT.	257+63.77	9.81 FT. RT.	6890.46	6873.46	17.00 FT.
DC 96	257,452.55	30,518.70	2561+75.17	2.17 FT. LT.	257+65.61	8.72 FT. RT.	6890.35	6883.35	7.00 FT.
DC 97	257,451.86	30,520.76	2561+77.00	1.00 FT. LT.	257+67.36	9.97 FT. RT.	6890.24	6873.24	17.00 FT.
DC 98	257,453.43	30,522.26	2561+78.83	2.17 FT. LT.	257+69.21	8.89 FT. RT.	6890.14	6883.14	7.00 FT.
DC 99	257,452.74	30,524.32	2561+80.67	1.00 FT. LT.	257+70.95	10.15 FT. RT.	6890.03	6873.03	17.00 FT.
DC 100	257,454.31	30,525.82	2561+82.50	2.17 FT. LT.	257+72.81	9.08 FT. RT.	6889.92	6882.92	7.00 FT.
DC 101	257,453.62	30,527.88	2561+84.33	1.00 FT. LT.	257+74.54	10.35 FT. RT.	6889.81	6872.81	17.00 FT.
DC 102	257,455.19	30,529.38	2561+86.17	2.17 FT. LT.	257+76.40	9.30 FT. RT.	6889.70	6882.70	7.00 FT.
DC 103	257,454.50	30,531.44	2561+88.00	1.00 FT. LT.	257+78.12	10.58 FT. RT.	6889.60	6872.60	17.00 FT.
DC 104	257,456.07	30,532.94	2561+89.83	2.17 FT. LT.	257+79.99	9.55 FT. RT.	6889.49	6882.49	7.00 FT.
DC 105	257,455.38	30,535.00	2561+91.67	1.00 FT. LT.	257+81.70	10.84 FT. RT.	6889.38	6872.38	17.00 FT.

KEYNOTES:

(1) SUBSURFACE STRATA UNKNOWN. CAISSON LENGTHS AND TIP ELEVATIONS ARE BASED ON THE ASSUMPTION THAT BEDROCK WILL NOT BE ENCOUNTERED. IF BEDROCK IS ENCOUNTERED, EMBED CAISSION A MINIMUM OF 5 FEET INTO BEDROCK AND ADJUST THE PILE LENGTH ACCORDINGLY.

90% SET

CALL UTILITY NOTIFICATION CENTER OF COLORADO
811
CALL 2-BUSINESS DAYS IN ADVANCE BEFORE YOU DIG, GRADE, OR EXCAVATE FOR THE MARKING OF UNDERGROUND MEMBER UTILITIES

REVISIONS:	NO.	DATE	REVISION DESCRIPTION:

Boulder County

Michael Baker INTERNATIONAL

BOULDER COUNTY TRANSPORTATION DEPARTMENT
ENGINEERING DIVISION

DESIGNED:	CAD:	CHECKED:	DATE:
MSC	DRH	DNB	03/25/16

UPPER FOURMILE CANYON DRIVE
GENERAL LAYOUT
RETAINING WALL 18 (3 OF 3)

PROJECT NO: 4041.SEPT12C37 | SHEET NO: 249

Daniel.Hawk 2:05:44 PM pw:\\DCPWAPP1.bkr.mbakercorp.com:pwprod\Documents\Projects\Lakewood_Office\Boulder_County_Emergency_Transportation\T01\08_Sheet_Files\06_Structures\DGN\138366_Wall_33.dgn

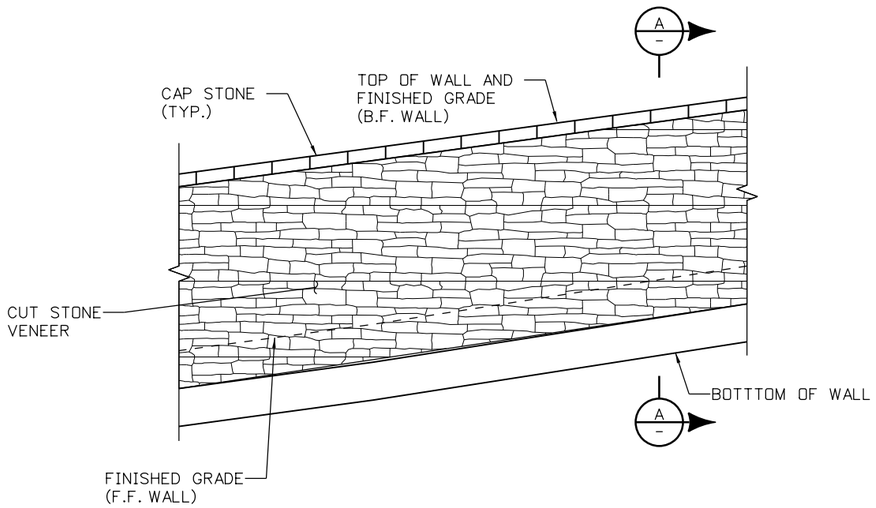

WALL PARTIAL ELEVATION

SOLDIER PILE WALLS 1, 3 & 9
SOIL NAIL WALL 10

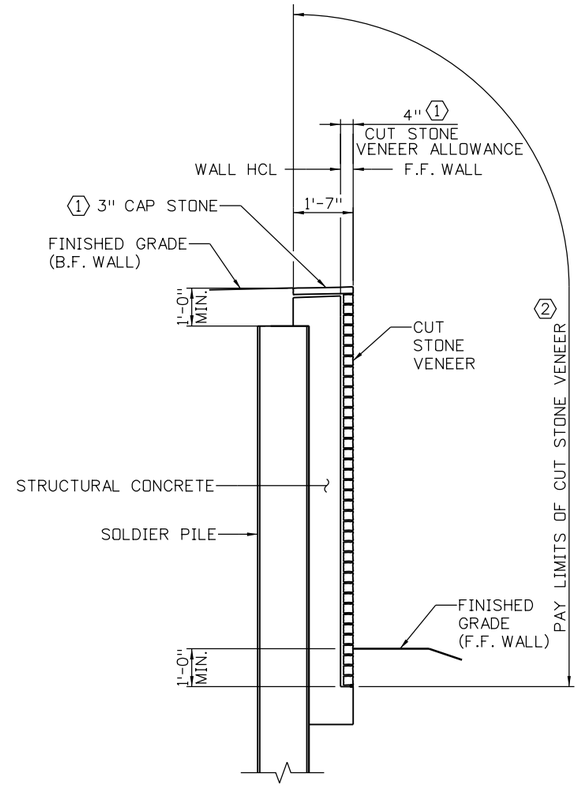

SECTION A

SOLDIER PILE WALL

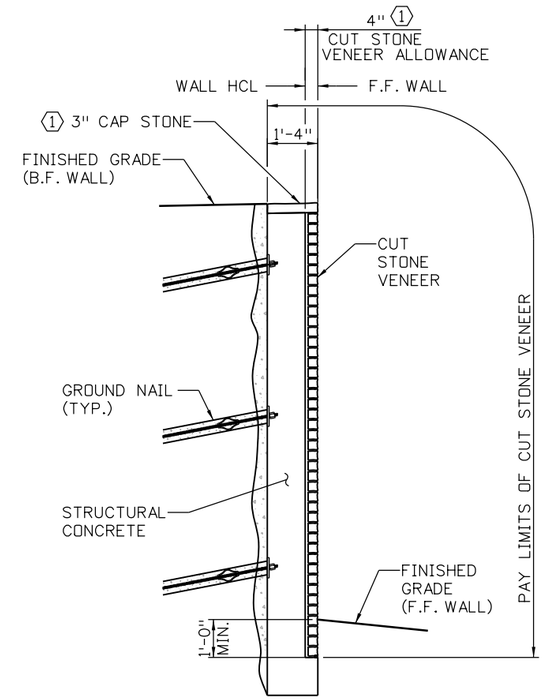

SECTION A

SOIL NAIL WALL

KEYNOTES:

1. CONTRACTOR TO VERIFY BEFORE REINFORCING STEEL WORKING DRAWINGS ARE DEVELOPED.
2. LIMITS ALSO APPLY AT BEGIN/END OF WALL

90% SET

CALL UTILITY NOTIFICATION CENTER OF COLORADO
811
CALL 2-BUSINESS DAYS IN ADVANCE BEFORE YOU DIG, GRADE, OR EXCAVATE FOR THE MARKING OF UNDERGROUND MEMBER UTILITIES

REVISIONS:	NO.	DATE	REVISION DESCRIPTION:

BOULDER COUNTY TRANSPORTATION DEPARTMENT
ENGINEERING DIVISION
Boulder County
Michael Baker INTERNATIONAL

DESIGNED:	CAD:	CHECKED:	DATE:
MSC	DRH	DNB	03/25/16

UPPER FOURMILE CANYON DRIVE
CUT STONE VENEER DETAILS (1 OF 2)

PROJECT NO: 4041.SEPT12C37 | SHEET NO: 250

Daniel.Hawk 2:06:00 PM pw:\\DCPWAPP1.bkr.mbakercorp.com:pwprod\Documents\Projects\Lakewood_Office\Boulder_County_Emergency_Transportation\T01\08_Sheet_Files\06_Structures\DGN\138366_Wall_34.dgn

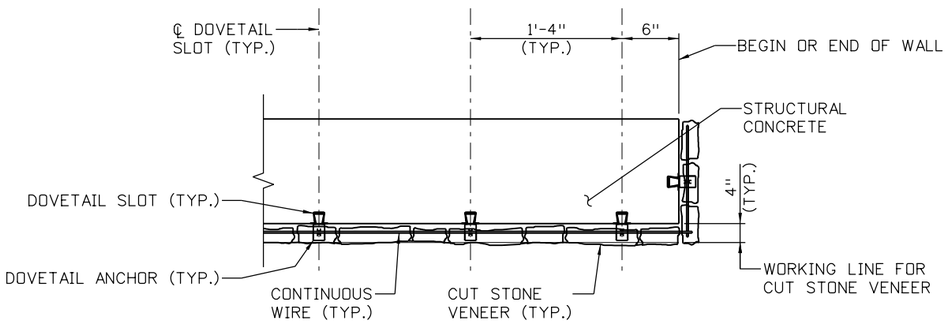

CUT STONE VENEER FACING ANCHOR PLAN DETAIL

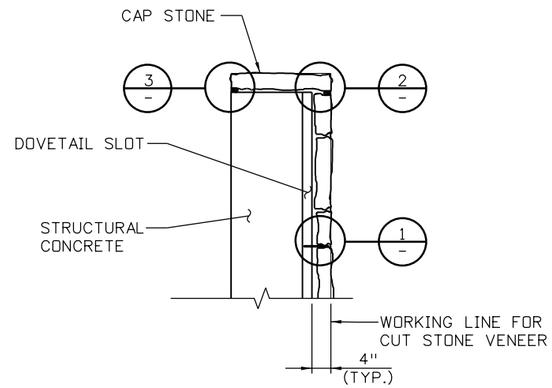

CUT STONE VENEER FACING ANCHOR ELEVATION DETAIL

NOTES:

1. CUT STONE VENEER SHALL BE IRREGULAR SHAPE, AS APPROVED BY THE ENGINEER, AND PLACED IN A RANDOM PATTERN.
2. THE DOVETAIL SLOTS SHALL BE TYPE 305 AS MANUFACTURED BY HOHMANN & BARNARD, INC., OR AN APPROVED EQUAL. THEY SHALL BE 22 GAGE HOT-DIPPED GALVANIZED STEEL, FILLED WITH FOAM AND WITH A THROAT OPENING WIDTH OF 5/8".
3. THE DOVETAIL ANCHORS SHALL BE 303 SV - SEISMIC-NOTCH AS MANUFACTURED BY HOHMANN & BARNARD, INC., OR AN APPROVED EQUAL. MATERIAL FOR DOVETAIL ANCHORS SHALL BE 3/32" THICK HOT-DIPPED GALVANIZED STEEL.
4. CONCRETE SURFACES SHALL BE PREPARED IN ACCORDANCE WITH SUPPLIER'S RECOMMENDATION PRIOR TO INSTALLATION OF CUT STONE VENEER.
5. ALL WORK NECESSARY FOR THE INSTALLATION OF CUT STONE VENEER, INCLUDING SURFACE PREPARATION, DOVETAIL SLOTS, WIRE TIES, STONE, MORTAR AND MISC. HARDWARE, SHALL BE INCLUDED IN ITEM 601 CUT STONE VENEER.
6. CUT STONE VENEER SHALL BE XXXXXXXXXXXXXXXXX OR APPROVED EQUAL.
7. MORTAR JOINTS SHALL BE 1/2" MAXIMUM THICKNESS UNLESS SHOWN OTHERWISE.
8. CUT STONE VENEER SHALL BE ANCHORED TO THE WALL CONCRETE BY MEANS OF WIRE TIES PLACED IN DOVETAIL SLOTS, AS SHOWN. ALTERNATIVE METHODS OF ANCHORING THE STONE VENEER MAY BE SUBMITTED TO THE ENGINEER FOR APPROVAL.
9. WIRE SHALL BE 9 GAGE PLAIN COLD-DRAWN STEEL WIRE CONFORMING TO ASTM A82. WIRE SHALL BE MILL GALVANIZED CONFORMING TO ASTM A153.
10. REINFORCING STEEL IN STRUCTURAL CONCRETE NOT SHOWN.

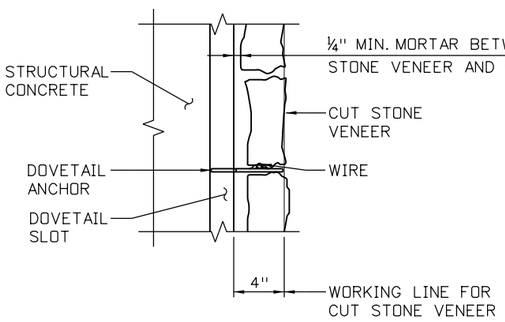

DETAIL 1/-
SCALE = 2.66:1

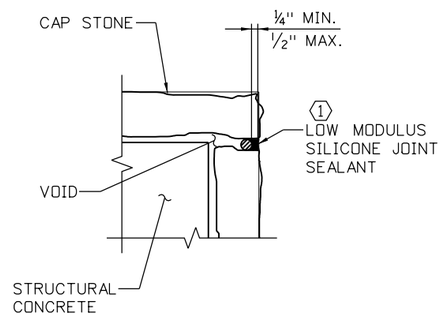

DETAIL 2/-
SCALE = 2.66:1

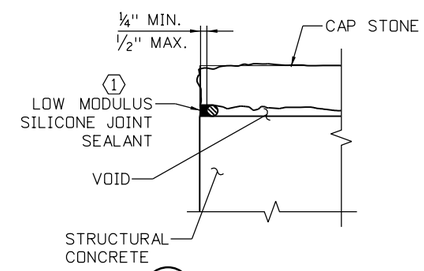

DETAIL 3/-
SCALE = 2.66:1

KEYNOTES:

1. TOOL SEALANT TO A ROUNDED SURFACE AND THE REQUIRED DIMENSIONS SHOWN. COLOR TO MATCH MORTAR JOINTS.

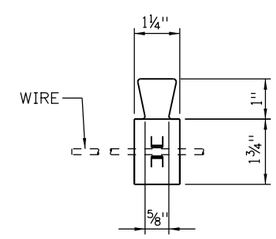

DOVETAIL ANCHOR AND WIRE

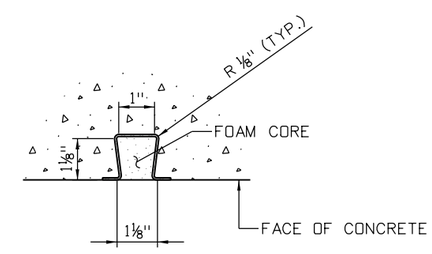

DOVETAIL SLOT
(DUR-O-WAL D/A 100 OR EQUIV.)

DOVETAIL ANCHOR AND SLOT PLAN DETAIL
SCALE = 4:1

90% SET

CALL UTILITY NOTIFICATION CENTER OF COLORADO
811
CALL 2-BUSINESS DAYS IN ADVANCE BEFORE YOU DIG, GRADE, OR EXCAVATE FOR THE MARKING OF UNDERGROUND MEMBER UTILITIES

REVISIONS: NO.	DATE	REVISION DESCRIPTION:

Boulder County
Michael Baker INTERNATIONAL

BOULDER COUNTY TRANSPORTATION DEPARTMENT
ENGINEERING DIVISION

DESIGNED:	CAD:	CHECKED:	DATE:
MSC	DRH	DNB	03/25/16

UPPER FOURMILE CANYON DRIVE
CUT STONE VENEER DETAILS
(2 OF 2)

PROJECT NO: 4041.SEPT12C37 | SHEET NO: 251

Daniel.Hawk 8:44:12 AM pw:\\DCPWAPP1.bkr.mbakercorp.com:pwprod\Documents\Projects\Lakewood_Office\Boulder_County_Emergency_Transportation\TOI\08_Sheet_Files\06_Structures\DGN\138366_Wall_35.dgn

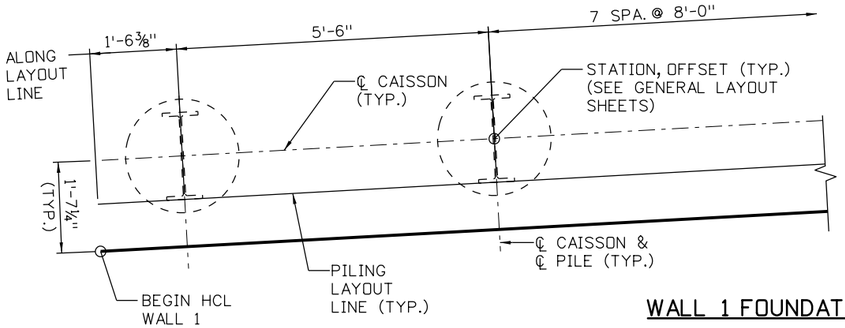

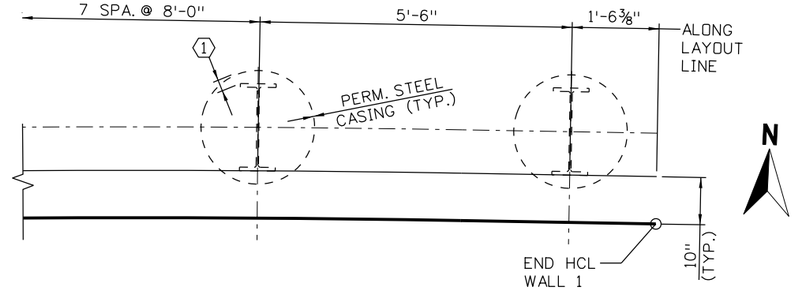

WALL 1 FOUNDATION LAYOUT - PLAN

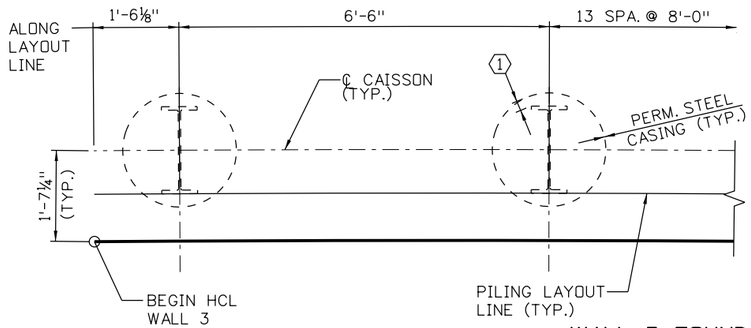

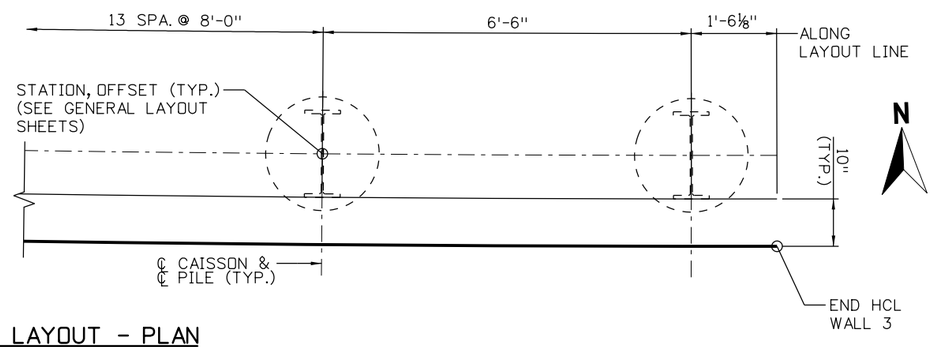

WALL 3 FOUNDATION LAYOUT - PLAN

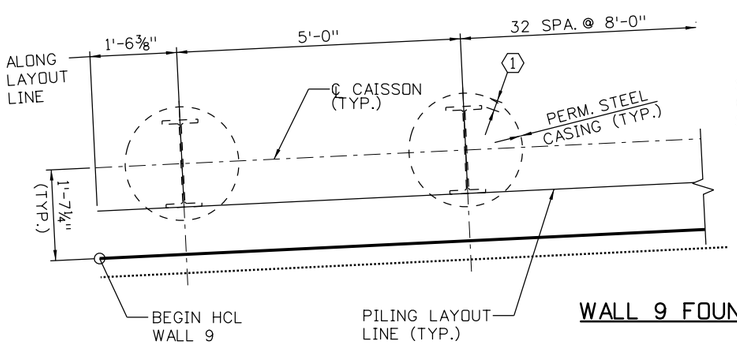

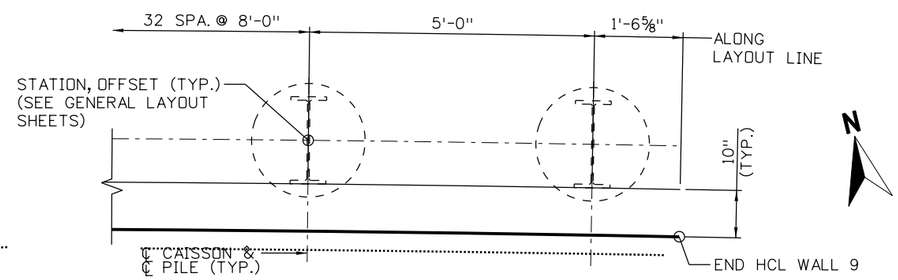

WALL 9 FOUNDATION LAYOUT - PLAN

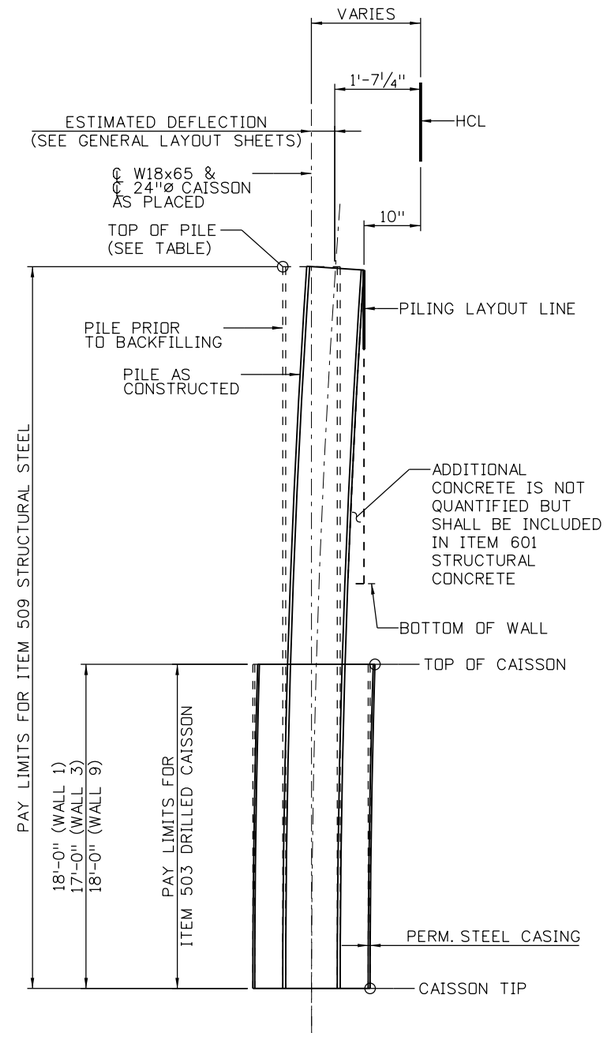

SOLDIER PILE DETAIL

N.T.S.

NOTES:

1. PERMANENT STEEL CASING SHALL BE A MINIMUM OF 3/8" THICK.
2. PERMANENT STEEL CASING SHALL BE INCLUDED IN ITEM 503 DRILLED CAISSON.
3. DRILLED CAISSON CONCRETE SHALL BE CONCRETE CLASS BZ.

KEYNOTES:

1. 2" CLEAR PER PLAN. 1 1/2" MINIMUM CLEAR.

90% SET

CALL UTILITY NOTIFICATION CENTER OF COLORADO
811
CALL 2-BUSINESS DAYS IN ADVANCE BEFORE YOU DIG, GRADE, OR EXCAVATE FOR THE MARKING OF UNDERGROUND MEMBER UTILITIES

REVISIONS:	NO.	DATE	REVISION DESCRIPTION:

Boulder County

BOULDER COUNTY TRANSPORTATION DEPARTMENT
ENGINEERING DIVISION

Michael Baker INTERNATIONAL

DESIGNED:	CAD:	CHECKED:	DATE:
MSC	DRH	DNB	03/25/16

UPPER FOURMILE CANYON DRIVE
SOLDIER PILE WALL DETAILS (1 OF 2)

PROJECT NO: 4041.SEPT12C37 | SHEET NO: 252

Daniel.Hawk 2:06:31 PM pw:\\DCPWAPP1.bkr.mbakercorp.com:pwprod\Documents\Projects\Lakewood_Office\Boulder_County_Emergency_Transportation\T01\08_Sheet_Files\06_Structures\DGN\138366_Wall_36.dgn

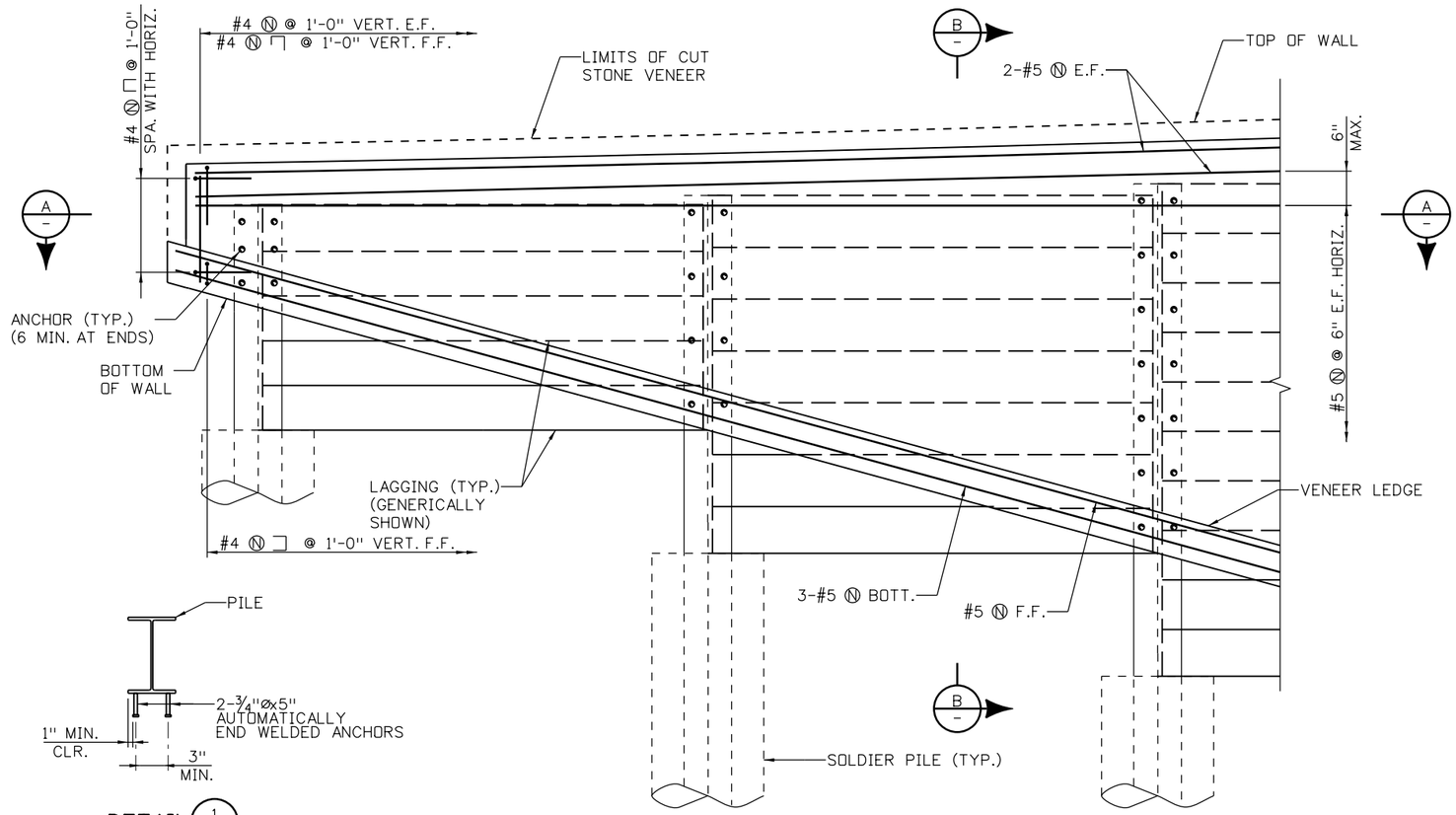

PARTIAL ELEVATION

WALL 1 SHOWN, WALLS 3 AND 9 SIMILAR
WEEP HOLES NOT SHOWN

DETAIL 1

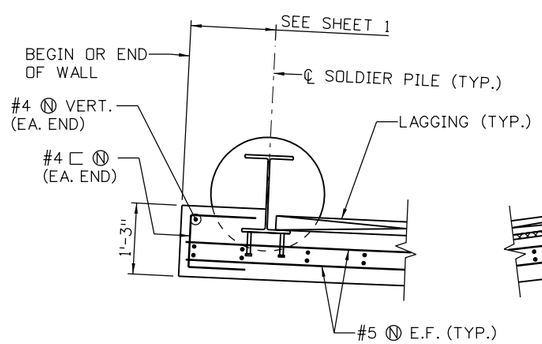

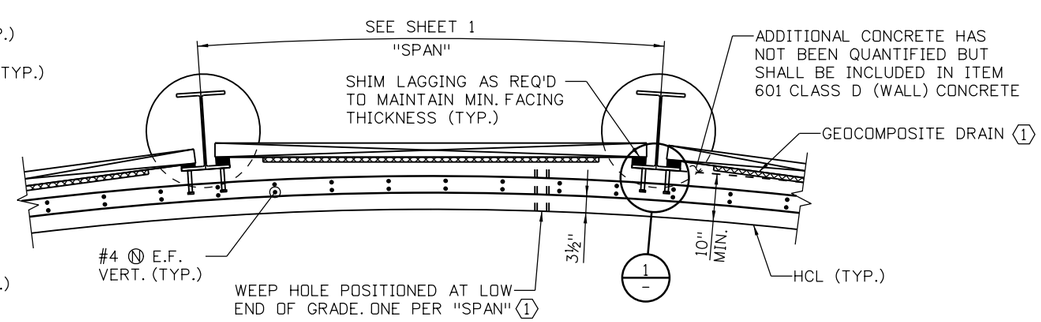

PARTIAL SECTION A

WALL 1 SHOWN, WALLS 3 AND 9 SIMILAR
CUT STONE VENEER NOT SHOWN

NOTES:

1. FACING CONCRETE SHALL BE CONCRETE CLASS D (WALL).
2. WEEP HOLES SHALL BE 2 INCH DIAMETER PVC PIPE, POSITIONED ±3 INCHES ABOVE FINSIHED GRADE (F.F.WALL). PROVIDE 1 INCH CLEAR TO REINFORCING.
3. ALL ELEMENTS ASSOCIATED WITH LAGGING, GEOCOMPOSITE SHEET DRAIN, AND PVC PIPE SHALL BE INCLUDED IN ITEM 601 CONCRETE CLASS D (WALL).
4. FOR ARCHITECTURAL TREATMENTS, REFER TO CUT STONE VENEER SHEETS.
5. LAGGING SHALL BE DESIGNED BY THE CONTRACTOR.
6. F.F. WALL SHALL BE PLUMB. SEE SOLDIER PILE DETAIL FOR ADDITIONAL CONCRETE QUANITITIES NOT SHOWN.
7. THE CONTRACTOR SHALL DETERMINE AND DESIGN LAGGING TO SPAN BETWEEN SOLDIER PILES. THE CONTRACTOR SHALL SUBMIT DESIGN CALCULATIONS AND WORKING DRAWINGS SEALED BY A REGISTERED COLORADO PROFESSIONAL ENGINEER FOR INFORMATION ONLY 10 DAYS BEFORE THE START OF WORK.

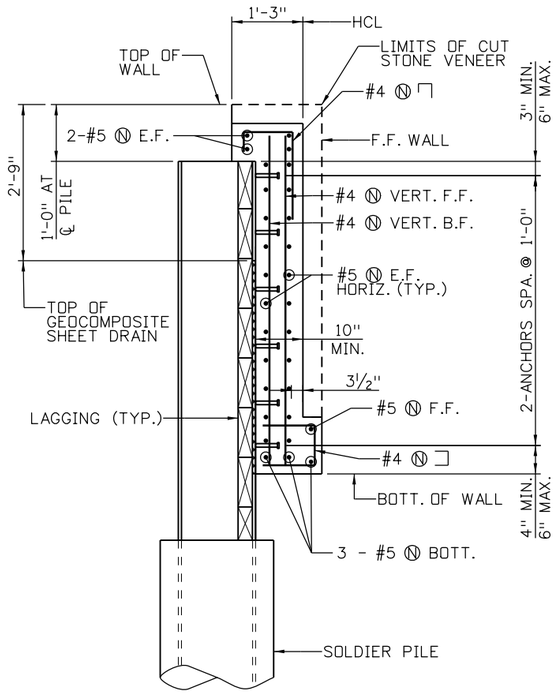

TYPICAL SECTION B

WEEP HOLES NOT SHOWN

KEYNOTES:

1. DRAINAGE NOT REQUIRED WHERE WALL HEIGHT "H" IS LESS THAN 6'-0".

90% SET

CALL UTILITY NOTIFICATION CENTER OF COLORADO
CALL 2-BUSINESS DAYS IN ADVANCE BEFORE YOU DIG, GRADE, OR EXCAVATE FOR THE MARKING OF UNDERGROUND MEMBER UTILITIES

REVISIONS: NO.	DATE	REVISION DESCRIPTION:

BOULDER COUNTY TRANSPORTATION DEPARTMENT
ENGINEERING DIVISION
Michael Baker INTERNATIONAL

DESIGNED:	CAD:	CHECKED:	DATE:
MSC	DRH	DNB	03/25/16

UPPER FOURMILE CANYON DRIVE
SOLDIER PILE WALL DETAILS (2 OF 2)

PROJECT NO: 4041.SEPT12C37 | SHEET NO: 253

Daniel.Hawk 8:44:29 AM pw:\\DCPWAPP1.bkr.mbakercorp.com:pwprod\Documents\Projects\Lakewood_Office\Boulder_County_Emergency_Transportation\T01\08_Sheet_Files\06_Structures\DGN\138366_Wall_37.dgn

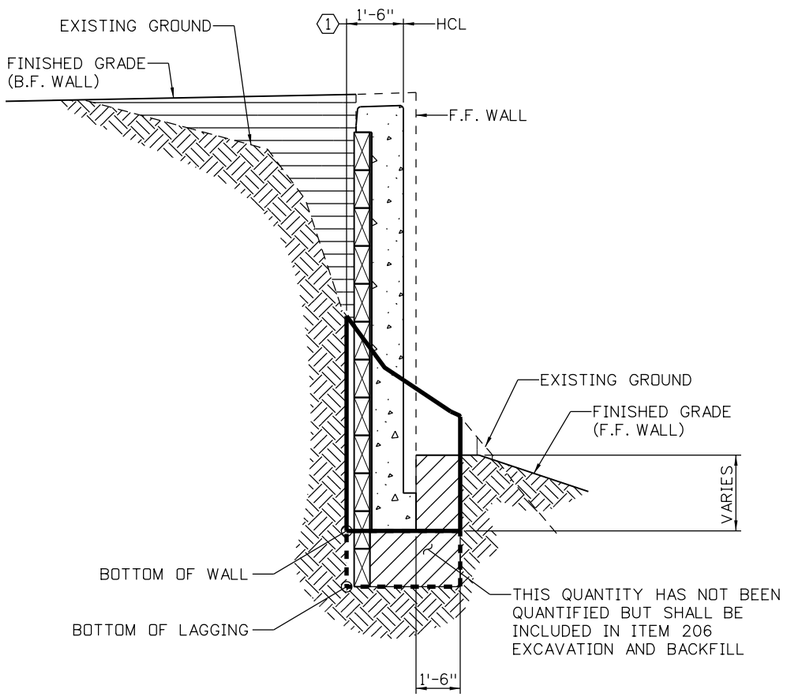

TYPICAL SECTION BETWEEN CAISSONS

WALL 1 SHOWN, WALLS 3 AND 9 SIMILAR

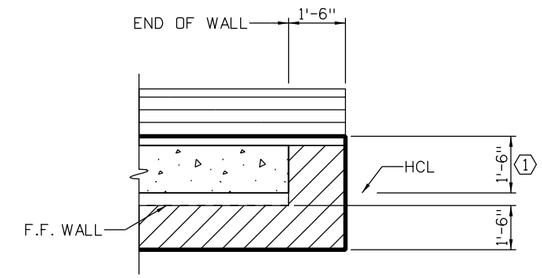

PLAN - END OF RETAINING WALL DETAIL

TAKEN AT FINISHED GRADE

NOTES:

1. THIS SHEET GIVES THE MINIMUM EXTENT OF EARTHWORK. THE CONTRACTOR MAY ELECT TO EXTEND THE STRUCTURE EXCAVATION AND STRUCTURE BACKFILL BEYOND THE LIMITS SHOWN. ANY ADDITIONAL EXCAVATION BEHIND THE WALL SHALL BE BACKFILLED WITH STRUCTURE BACKFILL (FLOW-FILL). ANY ADDITIONAL EXCAVATION IN FRONT OF THE WALL SHALL BE BACKFILLED WITH STRUCTURE BACKFILL (CLASS 2). ANY ADDITIONAL EXCAVATION OR BACKFILL BEYOND THE LIMITS SHOWN ON THIS SHEET WILL BE BORNE BY THE CONTRACTOR AND WILL NOT BE MEASURED OR PAID FOR.
2. EXCAVATION AND BACKFILL IN THE DRILLED HOLE OF THE CAISSON SHALL NOT BE PAID FOR SEPARATELY BUT INCLUDED IN ITEM 503 DRILLED CAISSON.
3. FOR DRAINAGE DETAILS, SEE SOLDIER PILE WALL DETAILS (2 OF 2).

KEYNOTES:

1. DIMENSION SHOWN IS USED FOR QUANTITY PURPOSES ONLY AND APPLIES FROM BEGINNING TO END OF WALL.

LEGEND:

- PAY LIMITS OF STRUCTURE EXCAVATION
- LIMITS OF STRUCTURE BACKFILL (CLASS 2)
- SEE ROADWAY PLANS
- LIMITS OF UNCLASSIFIED EXCAVATION (SEE ROADWAY PLANS)
- CONCRETE
- EARTH

90% SET

CALL UTILITY NOTIFICATION CENTER OF COLORADO
811
CALL 2-BUSINESS DAYS IN ADVANCE BEFORE YOU DIG, GRADE, OR EXCAVATE FOR THE MARKING OF UNDERGROUND MEMBER UTILITIES

REVISIONS:	NO.	DATE	REVISION DESCRIPTION:

Boulder County

BOULDER COUNTY TRANSPORTATION DEPARTMENT
ENGINEERING DIVISION

Michael Baker INTERNATIONAL

DESIGNED:	CAD:	CHECKED:	DATE:
MSC	DRH	DNB	03/25/16

UPPER FOURMILE CANYON DRIVE
SOLDIER PILE WALL EXCAVATION & BACKFILL

PROJECT NO: 4041.SEPT12C37 | SHEET NO: 254

Daniel.Hawk 2:07:01 PM pw:\\DCPW.APP1.bkr.mbakercorp.com:pwprod\Documents\Projects\Lakewood_Office\Boulder_County_Emergency_Transportation\T01\08_Sheet_Files\06_Structures\DGN\138366_Wall_38.dgn

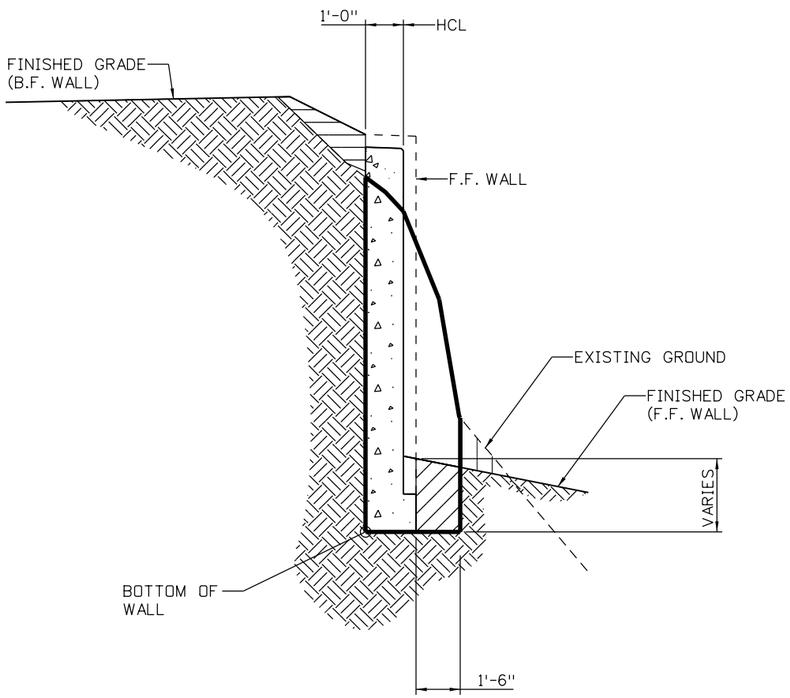

TYPICAL SECTION
WALL 10

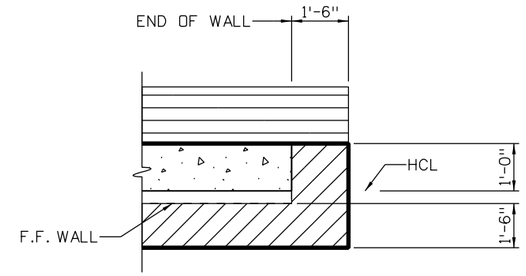

PLAN - END OF RETAINING WALL DETAIL
TAKEN AT FINISHED GRADE

NOTES:
1. THIS SHEET GIVES THE MINIMUM EXTENT OF EARTHWORK. THE CONTRACTOR MAY ELECT TO EXTEND THE STRUCTURE EXCAVATION AND STRUCTURE BACKFILL BEYOND THE LIMITS SHOWN. ANY ADDITIONAL EXCAVATION BEHIND THE WALL SHALL BE BACKFILLED WITH STRUCTURE BACKFILL (FLOW-FILL). ANY ADDITIONAL EXCAVATION IN FRONT OF THE WALL SHALL BE BACKFILLED WITH STRUCTURE BACKFILL (CLASS 2). ANY ADDITIONAL EXCAVATION OR BACKFILL BEYOND THE LIMITS SHOWN ON THIS SHEET WILL BE BORNE BY THE CONTRACTOR AND WILL NOT BE MEASURED OR PAID FOR.
2. FOR DRAINAGE DETAILS, SEE SOIL NAIL WALL DETAILS.

LEGEND:
- PAY LIMITS OF STRUCTURE EXCAVATION
- LIMITS OF STRUCTURE BACKFILL (CLASS 2)
- SEE ROADWAY PLANS
- LIMITS OF UNCLASSIFIED EXCAVATION (SEE ROADWAY PLANS)
- CONCRETE
- EARTH

90% SET

CALL UTILITY NOTIFICATION CENTER OF COLORADO
811
CALL 2-BUSINESS DAYS IN ADVANCE BEFORE YOU DIG, GRADE, OR EXCAVATE FOR THE MARKING OF UNDERGROUND MEMBER UTILITIES

REVISIONS:	NO.	DATE	REVISION DESCRIPTION:

Boulder County
Michael Baker INTERNATIONAL

BOULDER COUNTY TRANSPORTATION DEPARTMENT
ENGINEERING DIVISION

DESIGNED:	CAD:	CHECKED:	DATE:
MSC	DRH	DNB	03/25/16

UPPER FOURMILE CANYON DRIVE
SOIL NAIL WALL EXCAVATION & BACKFILL

PROJECT NO: 4041.SEPT12C37 | SHEET NO: 255

Daniel.Hawk 2:07:18 PM pw:\\DCPWAPPI.bkr.mbakercorp.com:pwprod\Documents\Projects\Lakewood_Office\Boulder_County_Emergency_Transportation\T01\08_Sheet_Files\06_Structures\DGN\138366_Wall_39.dgn

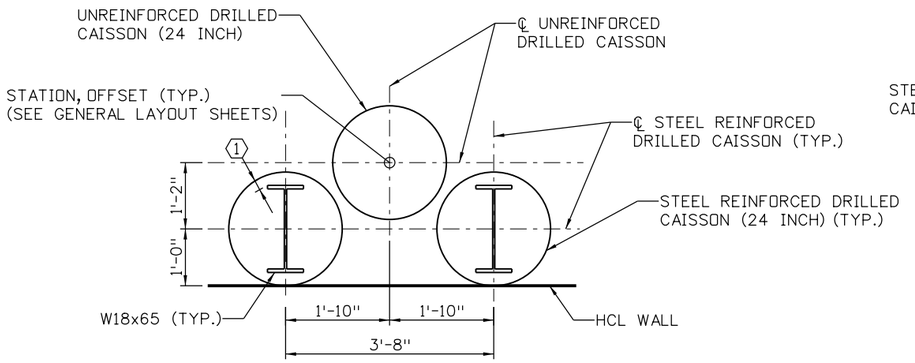

TYPICAL CAISSON WALL PLAN VIEW

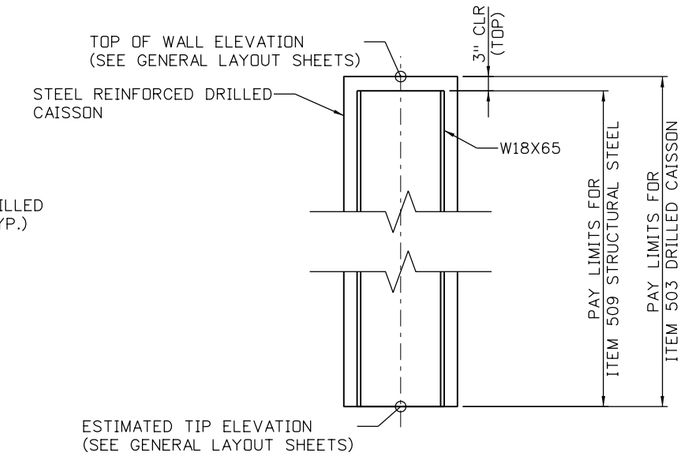

STEEL REINFORCED CAISSON DETAIL

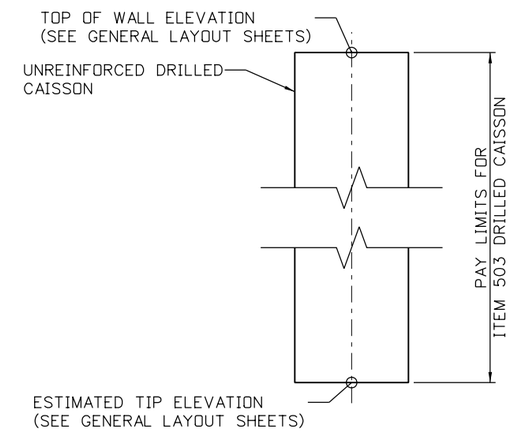

UNREINFORCED CAISSON DETAIL

NOTES:

1. CAISSON LAYOUT IS BASED UPON AN ASSUMED 1" OVERDRILL.
2. TEMPORARY CASING MAY BE REQUIRED TO PREVENT CAVING OF GRANULAR SOILS AND/OR TO REDUCE THE INTRUSION OF GROUND WATER. TEMPORARY CASING AND DEWATERING SHALL BE INCLUDED IN ITEM 503 DRILLED CAISSON.
3. DRILLED CAISSON CONCRETE SHALL BE CONCRETE CLASS BZ.

KEYNOTES:

1. 2" CLEAR PER PLAN. 1 1/2" MINIMUM CLEAR.

90% SET

CALL UTILITY NOTIFICATION CENTER OF COLORADO
CALL 2-BUSINESS DAYS IN ADVANCE BEFORE YOU DIG, GRADE, OR EXCAVATE FOR THE MARKING OF UNDERGROUND MEMBER UTILITIES

REVISIONS: NO.	DATE	REVISION DESCRIPTION:

BOULDER COUNTY TRANSPORTATION DEPARTMENT
ENGINEERING DIVISION
Michael Baker INTERNATIONAL

DESIGNED:	CAD:	CHECKED:	DATE:
MSC	DRH	DNB	03/25/16

UPPER FOURMILE CANYON DRIVE
CAISSON WALL DETAILS

PROJECT NO: 4041.SEPT12C37 | SHEET NO: 256

Daniel.Hawk 2:07:34 PM pw:\\DCPWAPP1.bkr.mbakercorp.com:pwprod\Documents\Projects\Lakewood_Office\Boulder_County_Emergency_Transportation\T01\08_Sheet_Files\06_Structures\DGN\138366_Wall_40.dgn

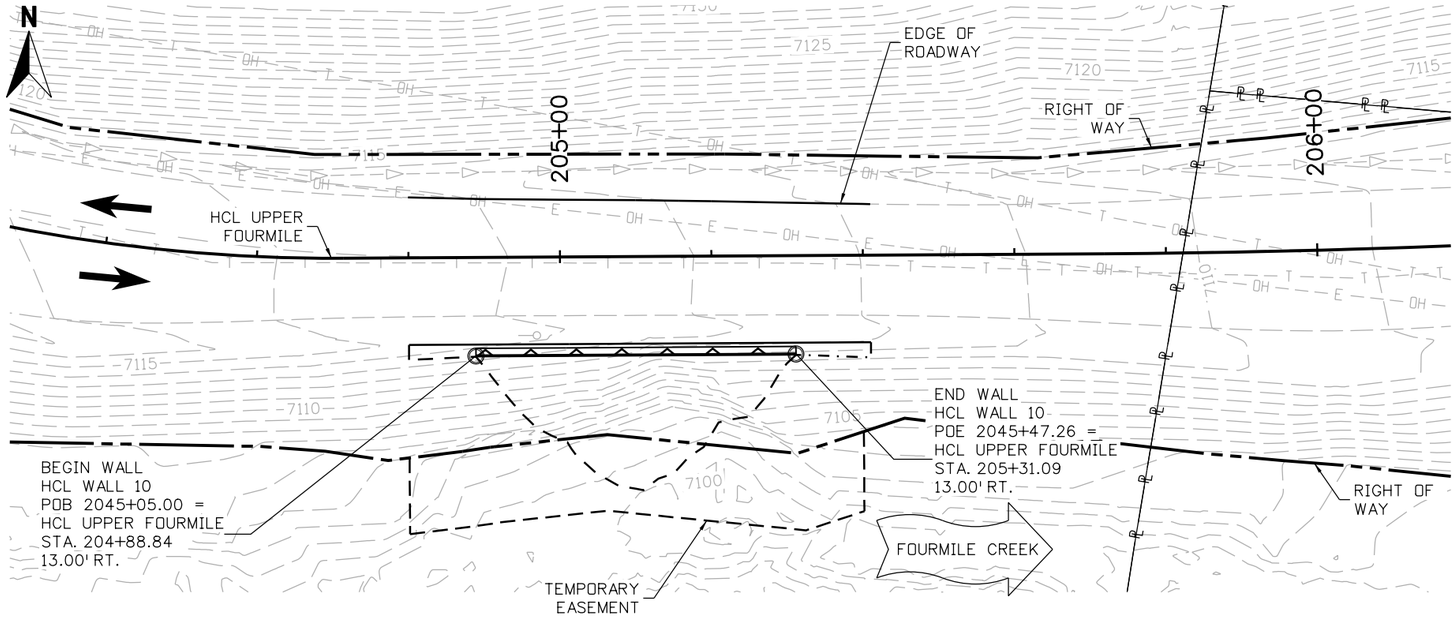

PLAN

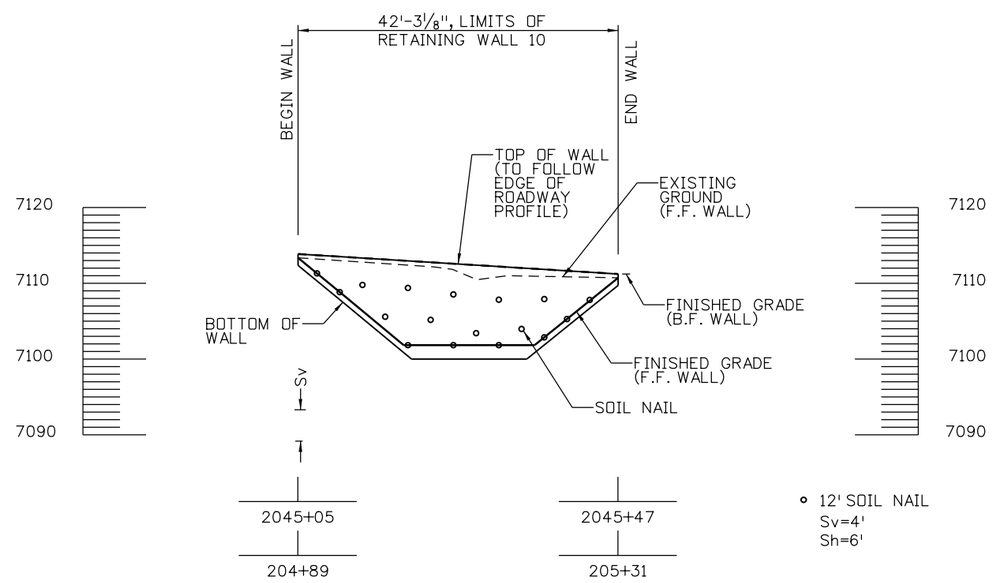

DEVELOPED ELEVATION

TAKEN AT HCL/FRONT FACE OF WALL

10 0 10 20 FT
HORIZONTAL SCALE: 1"=20'

Yeh and Associates, Inc.
Consulting Engineers & Scientists

90% SET

CALL UTILITY NOTIFICATION CENTER OF COLORADO
811
CALL 2-BUSINESS DAYS IN ADVANCE BEFORE YOU DIG, GRADE, OR EXCAVATE FOR THE MARKING OF UNDERGROUND MEMBER UTILITIES

REVISIONS:	NO.	DATE	REVISION DESCRIPTION:

BOULDER COUNTY TRANSPORTATION DEPARTMENT
ENGINEERING DIVISION
Boulder County
Michael Baker INTERNATIONAL

DESIGNED:	CAD:	CHECKED:	DATE:
SCS	MJW		03/25/16

UPPER FOURMILE CANYON DRIVE
SOIL NAIL LOCATION
RETAINING WALL 10

PROJECT NO: 4041.SEPT12C37 | SHEET NO: 257

Mike Walz 12:53:21 PM pw:\\DCPWAPP1.bkr.mbakercorp.com:pwprod\Documents\Projects\Lakewood_Office\Boulder_County_Emergency_Transportation\T01\05_Design\01_Geotech\138366_GNW Wall_01.dgn

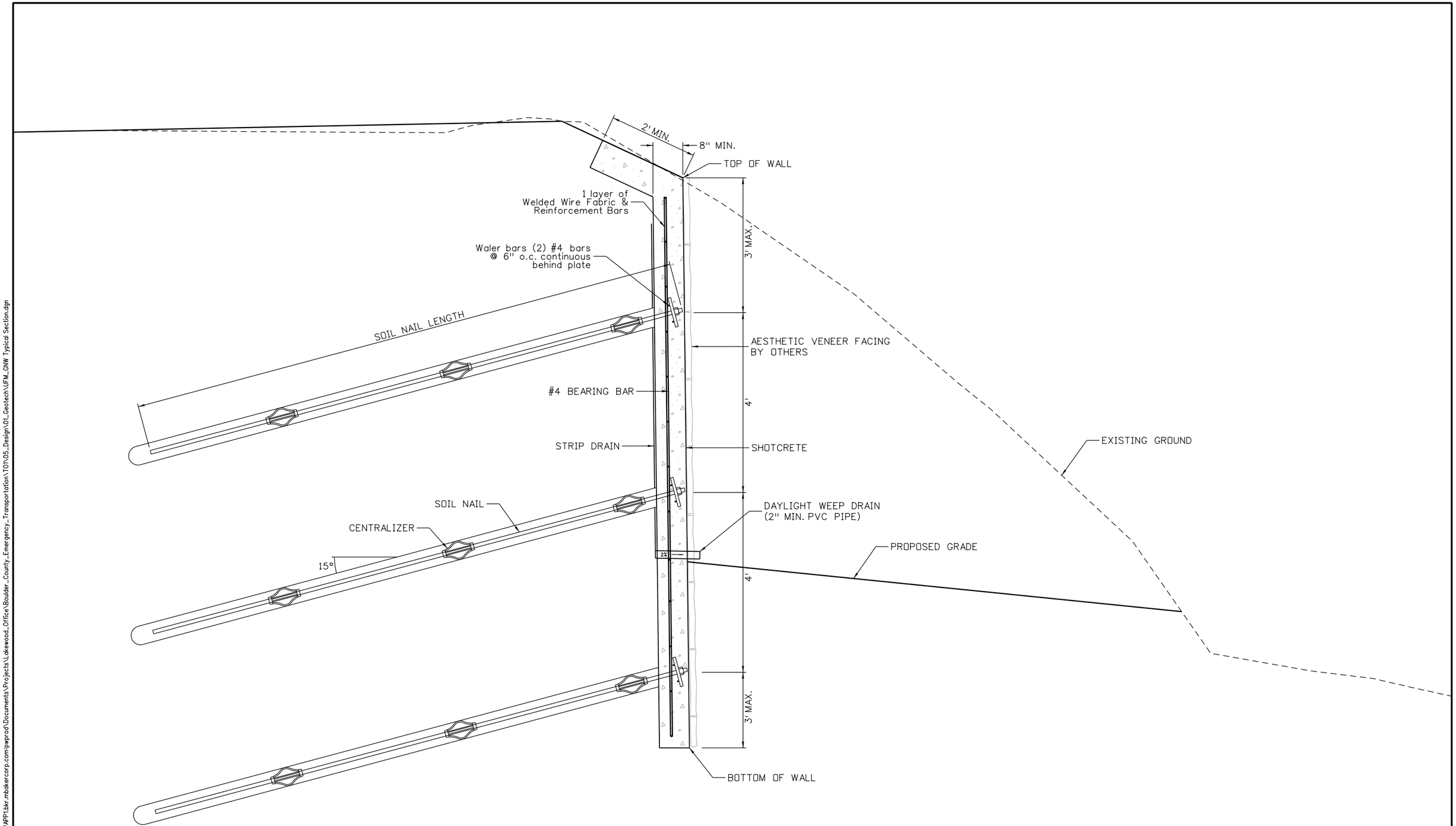

Mike Walz 1:02:47 PM pw:\\DCPWAPP1.bkr.mbakercorp.com:pwprod\Documents\Projects\Lakewood_Office\Boulder_County_Emergency_Transportation\T01\05_Design\01_Geotech\UFML_GNW Typical Section.dgn

Yeh and Associates, Inc.
Consulting Engineers & Scientists

90% SET

CALL UTILITY NOTIFICATION CENTER OF COLORADO
811
CALL 2-BUSINESS DAYS IN ADVANCE BEFORE YOU DIG, GRADE, OR EXCAVATE FOR THE MARKING OF UNDERGROUND MEMBER UTILITIES

REVISIONS:	NO.	DATE	REVISION DESCRIPTION:

Boulder County

BOULDER COUNTY TRANSPORTATION DEPARTMENT
ENGINEERING DIVISION
Michael Baker INTERNATIONAL

DESIGNED:	CAD:	CHECKED:	DATE:
SCS	MJW		03/25/16

UPPER FOURMILE CANYON DRIVE
SOIL NAIL WALL
TYPICAL SECTION

PROJECT NO: 4041.SEPT12C37 | SHEET NO: 258

GROUND NAIL WALL GENERAL NOTES

1.0 GENERAL NOTES

1.1 THE CONTRACTOR SHALL BE RESPONSIBLE FOR THE STABILITY OF STRUCTURES, INCLUDING EXCAVATIONS, DURING CONSTRUCTION.

1.2 ALL REINFORCING STEEL SHALL BE NON-EPOXY COATED UNLESS OTHERWISE NOTED.

1.3 THE MINIMUM LAP SPLICE LENGTH SHALL BE 1'-1" AND PLACED IN ACCORDANCE WITH SUBSECTION 602.06.

1.4 GROUND NAILS - GRADE 75 THREAD BAR OR EQUIVALENT IN ACCORDANCE WITH ASTM A615 AND EPOXY COATED IN ACCORDANCE WITH ASTM A775 AS SHOWN ON THE DRAWINGS.
FY=75,000 PSI

1.5 GROUT - GROUT SHALL BE NEAT-CEMENT OR WITH SAND, WITH TYPE I, TYPE II, OR TYPE III CEMENT IN ACCORDANCE WITH ASTM C150. WATER-CEMENT RATIO SHALL BE BETWEEN 0.4 AND 0.6 AND SHALL DEVELOP THE FOLLOWING STRENGTHS AT THE SPECIFIED CURE PERIODS.
F'C=3,000 PSI MINIMUM (7 DAY STRENGTH)

1.6 END HARDWARE - NUTS AND WASHERS SHALL BE IN ACCORDANCE WITH GROUND NAIL MANUFACTURER'S RECOMMENDATIONS. BEARING PLATE SHALL BE IN ACCORDANCE WITH ASTM A36, GRADE 36. BEARING PLATE, NUTS AND WASHERS SHALL BE EPOXY-COATED.

1.7 SHOTCRETE - PER CDOT STANDARD SPECIFICATIONS SECTION 641 SHOTCRETE.

1.8 UNLESS OTHERWISE NOTED ON THE PLANS, MINIMUM COVER OF SHOTCRETE REINFORCEMENT AND NAIL END HARDWARE SHOULD BE AS FOLLOWS:
FACE EXPOSED TO WEATHER - 2"
FACE EXPOSED TO SOIL - 3"

1.9 WELDED WIRE MESH SHALL BE IN ACCORDANCE WITH ASTM A1064.
FY=65,000 PSI

1.10 WALERS AND VERTICAL BEARING BARS SHALL BE IN ACCORDANCE WITH ASTM A615.
FY=60,000 PSI

1.11 STRIP DRAINS CONSIST OF 12" WIDE DIMPLED CORES WRAPPED IN GEOTEXTILE IN CONFORMANCE WITH SUBSECTION 712.12 GEOCOMPOSITE DRAINS.

1.12 CENTRALIZERS SHALL BE PLASTIC AND ATTACHED TO THE NAILS IN ACCORDANCE WITH THE MANUFACTURER'S RECOMMENDATIONS.

1.13 STATIONS, ELEVATIONS AND DIMENSIONS CONTAINED IN THESE PLANS ARE CALCULATED FROM A RECENT FIELD SURVEY. THE CONTRACTOR SHALL VERIFY ALL DIMENSIONS IN THE FIELD BEFORE ORDERING OR FABRICATING ANY MATERIAL.

2.0 GROUND NAIL WALL CONSTRUCTION SEQUENCE

2.1 EXCAVATE ONE LIFT TO A MAXIMUM DEPTH OF FOUR (4) FEET. BOULDERS, COBBLES AND/OR BEDROCK MAY BE ENCOUNTERED AT ANY DEPTH OF THE EXCAVATION OR DRILLING. IF SLOUGHING GROUND CONDITIONS ARE ENCOUNTERED, GROUND NAILS MAY BE DRILLED AND INSTALLED THROUGH A TEMPORARY STABILIZING BERM AND/OR PLACEMENT OF A SACRIFICIAL REINFORCED SHOTCRETE FLASH COAT MAY BE USED TO TEMPORARILY STABILIZE EXCAVATION PRIOR TO DRILLING GROUND NAILS. CARE SHOULD BE TAKEN DURING EXCAVATION THAT NO GROUND IS LOST FROM BEHIND THE PREVIOUSLY COMPLETED SHOTCRETE. OBSTRUCTIONS INCLUDING BUT NOT LIMITED TO STEEL, PLATING AND CRIBBING SHALL BE ANTICIPATED IN EXCAVATIONS.

2.2 INSTALL GROUND NAILS AT THE SPACINGS AND TO THE LENGTHS SHOWN ON THE PLANS. THE TOP ROW OF GROUND NAILS SHALL BE WITHIN 3 FEET OF THE TOP OF THE WALL. THE BOTTOM ROW OF NAILS SHALL BE WITHIN 3 FEET OF THE BOTTOM OF THE WALL. THE TOLERANCE FOR GROUND NAIL LOCATIONS SHALL BE 6 INCHES. TREMIE THE GROUT FROM THE BOTTOM OF THE HOLE UP.

2.3 INSTALL STRIP DRAINS, WELDED WIRE MESH, WALERS AND VERTICAL BEARING BARS AS SHOWN ON THE DRAWINGS. USE PLASTIC CHAIRS TO HOLD THE REINFORCEMENT AWAY FROM THE SOIL AS NECESSARY.

2.4 INSTALL SHOTCRETE TO THE MINIMUM THICKNESS SHOWN ON THE DRAWINGS AND TO ATTAIN THE MINIMUM COVERAGES SPECIFIED HEREIN. GIVE SPECIAL ATTENTION TO FILLING THE VOID IN THE BORE HOLE ABOVE THE GROUT LINE. COLD WEATHER PROTECTION MEASURES MAY BE NECESSARY.

2.5 INSTALL THE GROUND NAIL END HARDWARE AFTER THE SHOTCRETE HAS BEEN INSTALLED. WHILE THE SHOTCRETE IS STILL WET, EMBED THE PLATE INTO THE SHOTCRETE SURFACE UNTIL THERE IS NO VOID BEHIND THE PLATE. HAND TIGHTEN THE NUT SNUG. APPLY ADDITIONAL SHOTCRETE TO ATTAIN MINIMUM COVERAGE FOR THE GROUND NAIL AND END HARDWARE.

2.0 GROUND NAIL WALL CONSTRUCTION SEQUENCE con't

2.6 ONCE THE GROUT AND SHOTCRETE OF THE CURRENT LIFT HAVE ATTAINED 50% OF THEIR SPECIFIED STRENGTHS, REPEAT CONSTRUCTION SEQUENCE TO THE BOTTOM OF THE WALL.

3.0 GROUND NAIL WALL DESIGN PARAMETERS

3.1 THE GROUND NAIL WALL HAS BEEN DESIGNED IN GENERAL ACCORDANCE WITH PROCEDURES CONTAINED IN THE FWHA "MANUAL FOR DESIGN AND CONSTRUCTION MONITORING OF GROUND NAIL WALLS", REPORT NO. FHWA-SA-96-069R AND AASHTO 2002 STANDARD SPECIFICATIONS FOR HIGHWAY BRIDGES (17TH EDITION).

3.2 THE FOLLOWING VALUES HAVE BEEN USED FOR DESIGN PARAMETERS:

	Ø (DEG)	c (PSF)	γ (PCF)	Qd (lb/ft)
CLAYEY SAND/GRAVEL	32	25	120	1130

Ø ANGLE OF INTERNAL FRICTION
c COHESION
γ UNIT WEIGHT
Q_d DESIGN SHEAR RESISTANCE
BOND STRESS (ALLOWABLE)

3.3 NO GROUNDWATER TABLE WAS ASSUMED.

4.0 GROUND NAIL WALL SPECIAL NOTES

4.1 THE CONTRACTOR IS RESPONSIBLE FOR FIELD LOCATING ALL NEARBY UTILITIES.

4.2 THE BOND STRENGTHS (Qd) SHOWN ON THE PLANS ARE THE MINIMUM ASSUMED FOR DESIGN.

4.3 GROUND NAIL LENGTHS SHOWN ON THE PLANS ARE THE MINIMUM LENGTHS REQUIRED.

4.4 PRIOR TO BEGINNING EXCAVATION FOR THE GROUND NAIL WALL, THE CONTRACTOR SHALL:

4.4.1 SURVEY THE LAYOUT LINE AND TOP OF WALL LINE.

4.4.2 CONFIRM THE LINES, GRADES, AND EXCAVATION LIMITS SHOWN ON THE PLANS.

4.4.3 THE CONTRACTOR SHALL MODIFY THE PLAN WALL PROFILES USING THE FIELD SURVEY INFORMATION AND SUBMIT TO THE ENGINEER FOR REVIEW AND APPROVAL.

4.5 TOP APPROXIMATELY 18" OF SHOTCRETE FACING SHALL BE REMOVED AFTER WIRE MESH WALL CONSTRUCTION AND PRIOR TO PAVEMENT CONSTRUCTION.

Know what's below.
Call before you dig.

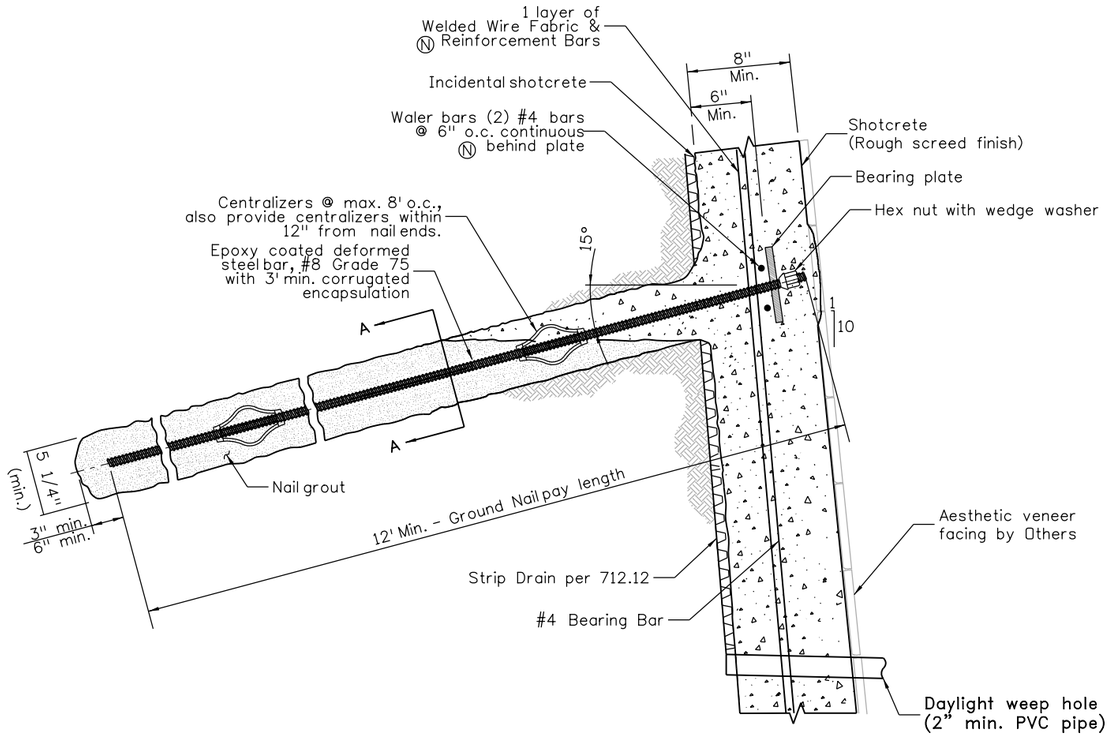

TYPICAL GROUND NAIL DETAIL
NTS

Notes:

1. Reinforcement of the shotcrete facing shall be installed throughout the entire shotcrete facing, including the facing beyond the ground nails.
2. Maximum edge distance of 3 ft for each row of ground nails at end of system.
3. The minimum shotcrete thickness is 8 in. for system face with 4 in. minimum behind the bearing plate.
4. Ⓝ denotes non-coated reinforcing steel.
5. 2" min. cover over nail end and hardware
6. 2" min. cover on all reinforcing exposed to air
7. 3" min. cover on all reinforcing exposed to soil

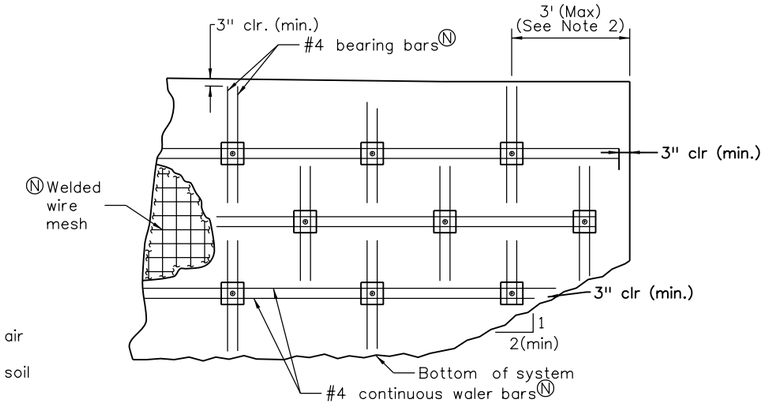

TYPICAL SHOTCRETE FACING REINFORCEMENT - END OF SYSTEM (NOTE 1)
NTS

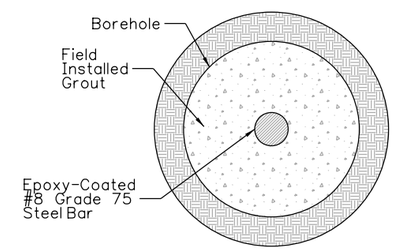

GROUND NAIL CROSS SECTION A-A'
NTS

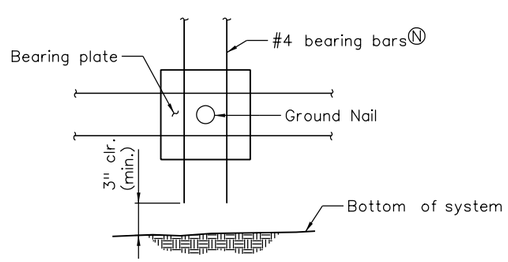

TYPICAL REINFORCEMENT BOTTOM ROW OF GROUND NAILS
NTS

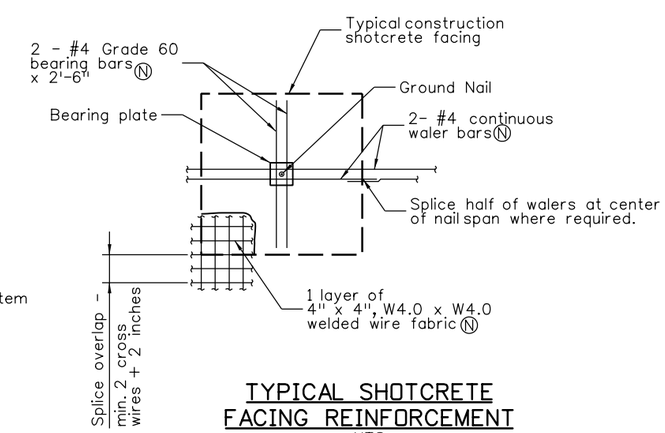

TYPICAL SHOTCRETE FACING REINFORCEMENT
NTS

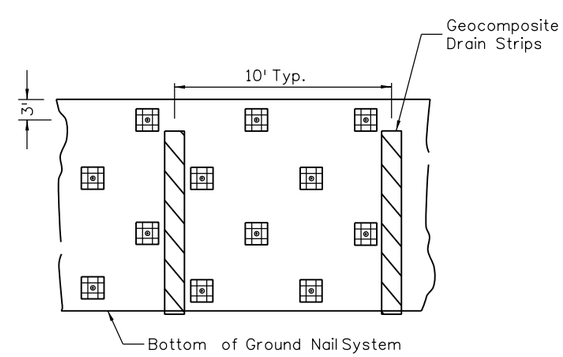

TYPICAL STRIP DRAIN DETAIL
NTS

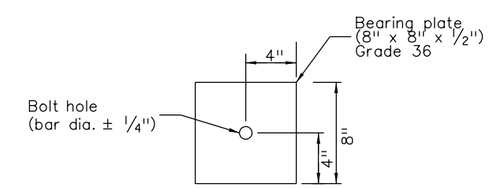

BEARING PLATE DETAIL
NTS

Yeh and Associates, Inc.
Consulting Engineers & Scientists

90% SET

CALL UTILITY NOTIFICATION CENTER OF COLORADO
811
CALL 2-BUSINESS DAYS IN ADVANCE BEFORE YOU DIG, GRADE, OR EXCAVATE FOR THE MARKING OF UNDERGROUND MEMBER UTILITIES

REVISIONS:	NO.	DATE	REVISION DESCRIPTION:

Boulder County
Michael Baker INTERNATIONAL

BOULDER COUNTY TRANSPORTATION DEPARTMENT
ENGINEERING DIVISION

DESIGNED:	CAD:	CHECKED:	DATE:
SCS	MJW		03/25/16

UPPER FOURMILE CANYON DRIVE
SOIL NAIL WALL DETAILS

PROJECT NO: 4041.SEPT12C37 | SHEET NO: 260

Mike Walz 1:06:23 PM pw:\\DCPWAPP1.bkr.mbakercorp.com:pwprod\Documents\Projects\Lakewood_Office\Boulder_County_Emergency_Transportation\T01\05_Design\01_Geotech\UFM_GNW Details01.dgn

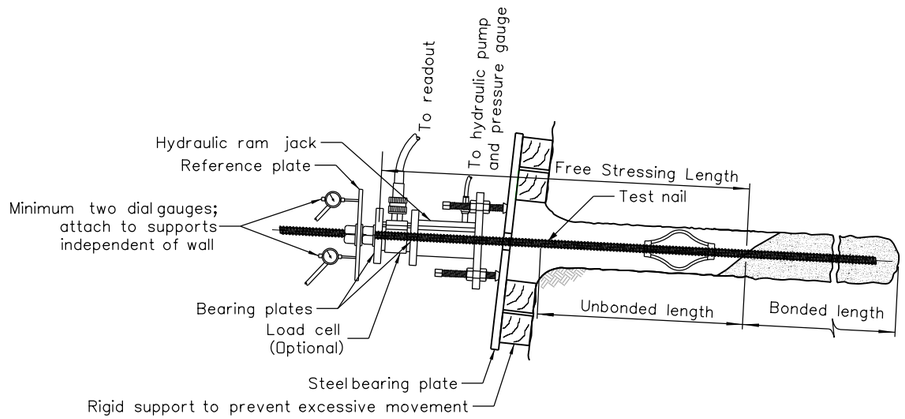

TYPICAL GROUND NAIL TEST SETUP

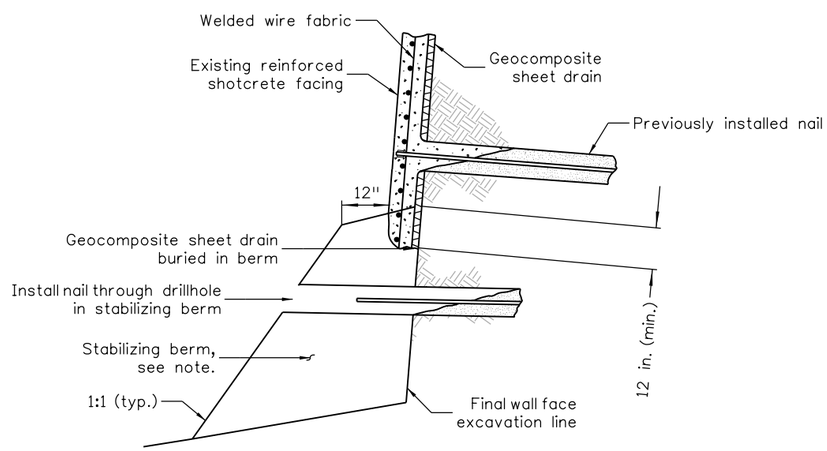

NAIL INSTALLATION THROUGH TEMPORARY STABILIZING BERM

(USE IN CASE OF SLOUGHING GROUND)

Note:
Excavate stabilizing berm to final wall face excavation line for shotcrete placement. Contractor shall carefully excavate stabilizing berm to avoid hitting ground nails buried in the berm.

GROUND NAIL TESTING NOTES:

1. See specifications for verification and proof test nail requirements,
2. Required ground nail allowable pullout resistance:
   As shown on plans
3. The test support system (eg. cribbing, chairs, bearing plates, etc.) shall be sufficient to complete the test without excessive deflection or bearing failure.
4. A minimum of 1 verification test is required for ground nail wall. Additional verification tests may be required by the Engineer if ground conditions or construction methods change.
5. A minimum of 5% of the ground nails shall be proof-tested.

Mike Walz 12:47:05 PM pw:\\DCPWAPP1.bkr.mbakercorp.com:pwprod\Documents\Projects\Lakewood_Office\Boulder_County_Emergency_Transportation\T01\05_Design\01_Geotech\UFM_GNW Testing and Const.dgn