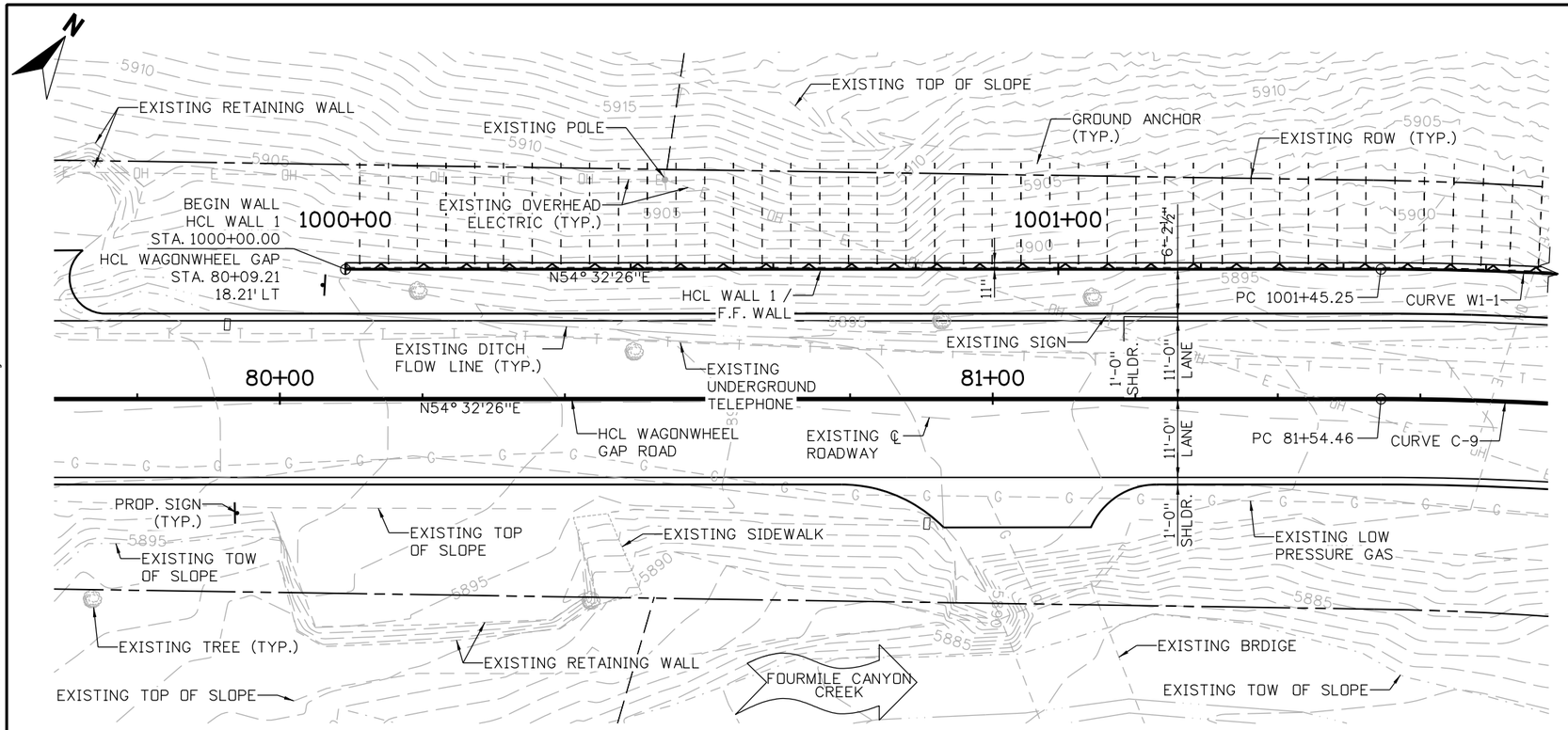

PLAN

NOTES:

1. GROUND NAILS ARE GENERICALLY SHOWN. SEE GROUND NAIL LAYOUT FOR ACTUAL LOCATIONS.

CURVE W1-1 DATA

Δ = 24° 38'50" RT
R = 458.21'
L = 197.11'
T = 100.10'
PI 1002+45.35
N 266602.00
E 53808.30

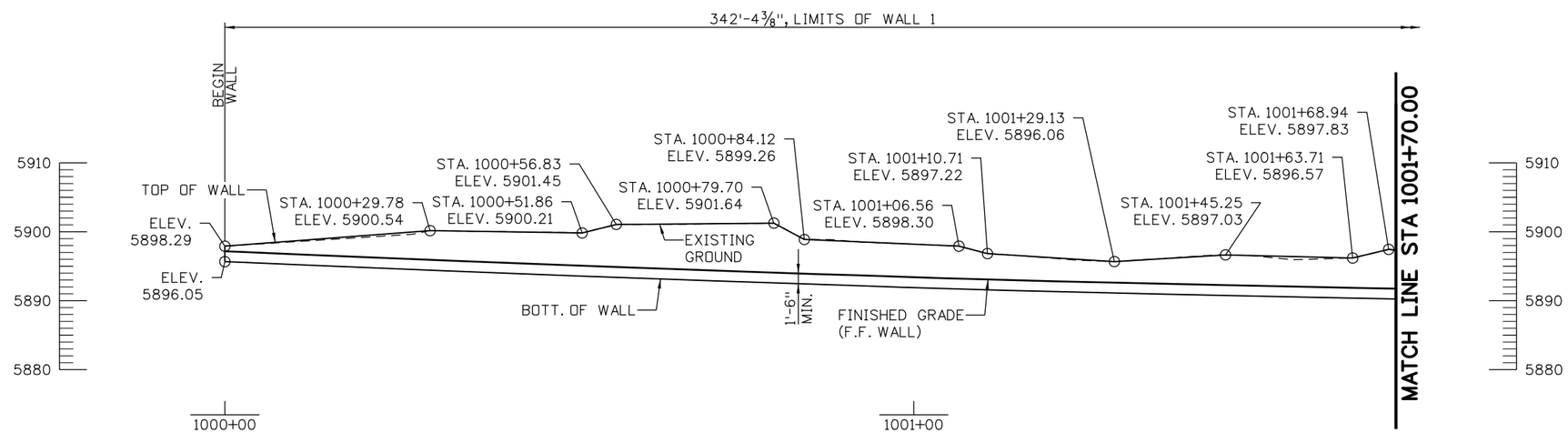

ELEVATION
TAKEN AT HCL WALL 1 / F.F. WALL

10 0 10 20 FT
SCALE: 1"=20'

90% SET

CALL UTILITY NOTIFICATION CENTER OF COLORADO
CALL 2-BUSINESS DAYS IN ADVANCE BEFORE YOU DIG, GRADE, OR EXCAVATE FOR THE MARKING OF UNDERGROUND MEMBER UTILITIES

REVISIONS: NO.	DATE	REVISION DESCRIPTION:

BOULDER COUNTY TRANSPORTATION DEPARTMENT
ENGINEERING DIVISION
Michael Baker INTERNATIONAL

DESIGNED:	CAD:	CHECKED:	DATE:
DLT	BMT		5/3/2016

WAGONWHEEL GAP ROAD WALLS
RETAINING WALL 1
GENERAL LAYOUT (1 OF 3)
PROJECT NO: 4043.SEPT12C34 SHEET NO: 116

brett.terrell 6:10:43 PM 5/3/2016 pw:\\DCPWAPP1.bkr.mbakercorp.com:pwprod\Documents\Projects\Lakewood_Office\Boulder_County_Emergency_Transportation\T04\08_Sheet_Files\06_Structures\DGN\Walls\138200_WALL_02.dgn

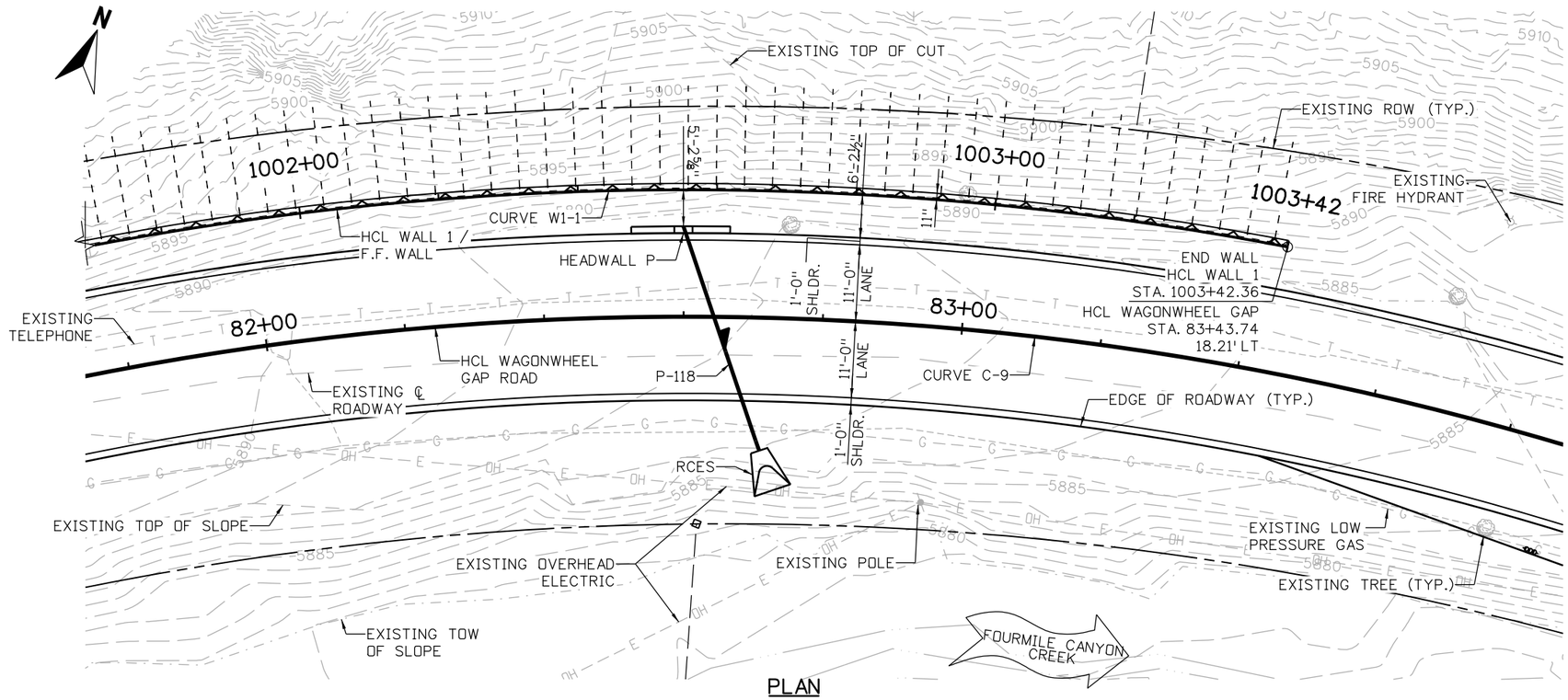

PLAN

NOTES:

1. FOR END SECTIONS, HEADWALL AND WINGWALL DETAILS, REFER TO DRAINAGE PLANS.
2. GROUND NAILS ARE GENERICALLY SHOWN. SEE GROUND NAIL LAYOUT FOR ACTUAL LOCATIONS.

CURVE W1-1 DATA

Δ = 24° 38'50" RT
R = 458.21'
L = 197.11'
T = 100.10'
PI 1002+45.35
N 266602.00
E 53808.30

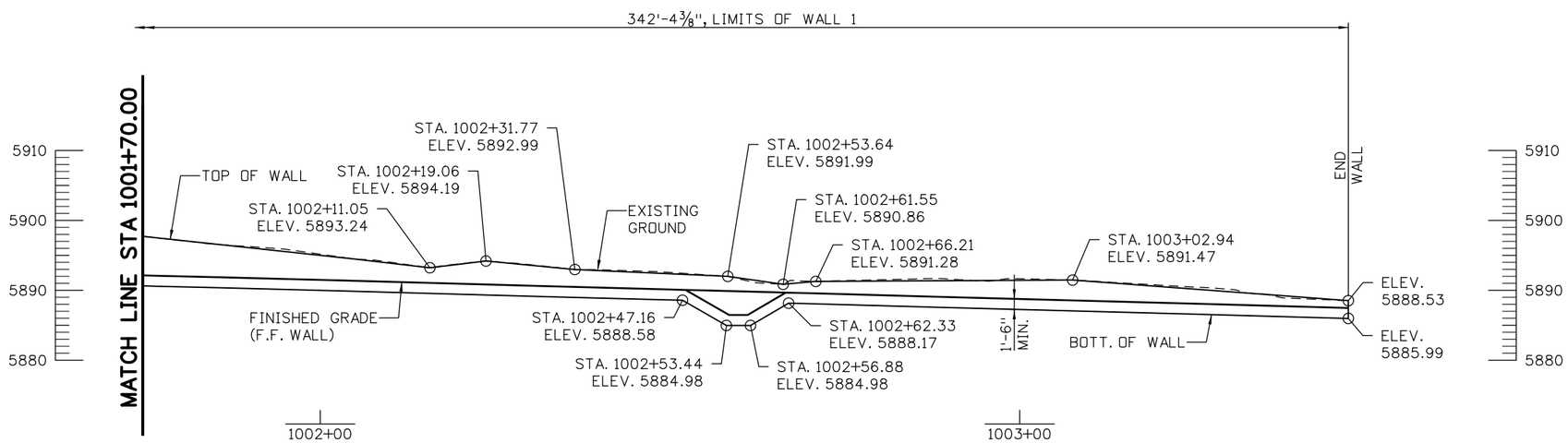

ELEVATION

TAKEN AT HCL WALL 1 / F.F. WALL

10 0 10 20 FT
SCALE: 1"=20'

90% SET

CALL UTILITY NOTIFICATION CENTER OF COLORADO
811
CALL 2-BUSINESS DAYS IN ADVANCE BEFORE YOU DIG, GRADE, OR EXCAVATE FOR THE MARKING OF UNDERGROUND MEMBER UTILITIES

REVISIONS:	NO.	DATE	REVISION DESCRIPTION:

Boulder County
Michael Baker INTERNATIONAL

BOULDER COUNTY TRANSPORTATION DEPARTMENT
ENGINEERING DIVISION

DESIGNED:	CAD:	CHECKED:	DATE:
DLT	BMT		5/3/2016

WAGONWHEEL GAP ROAD WALLS
RETAINING WALL 1
GENERAL LAYOUT (2 OF 3)

PROJECT NO: 4043.SEPT12C34 SHEET NO: 117

brett.terrell 6:11:03 PM 5/3/2016 pw:\\DCPWAPP1.bkr.mbakercorp.com:pwprod\Documents\Projects\Lakewood_Office\Boulder_County_Emergency_Transportation\T04\08_Sheet_Files\06_Structures\DGN\Walls\138200_WALL_03.dgn

DESIGN DATA

SEISMIC ZONE 1

REINFORCED CONCRETE:

CONCRETE CLASS SHOTCRETE :	f'c = 4,500 PSI
REINFORCING STEEL:	fy = 60,000 PSI
WELDED WIRE FABRIC:	fy = 65,000 PSI
SEVERITY OF SULFATE EXPOSURE:	CLASS 0

SOIL PROPERTIES:

IN-SITU SOIL:

SOIL UNIT WEIGHT:	145 PCF
SOIL COHESION:	5,000 PSF
SOIL FRICTION ANGLE:	38°

NOTES:

1. FOR ARCHITECTURAL DETAILS, REFER TO CUT STONE VENEER DETAILS SHEET.
2. GROUND NAILS ARE GENERICALLY SHOWN.

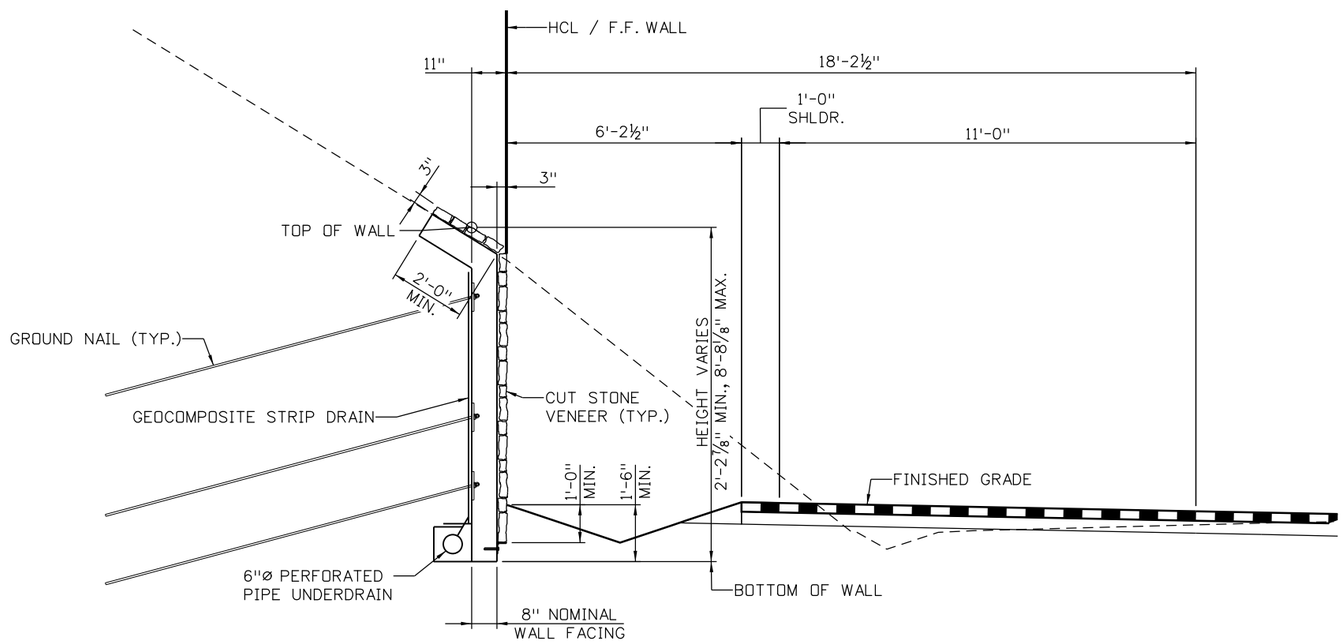

TYPICAL SECTION

LOOKING AHEAD STATION

2'-8" 0 2'-8" 5'-4"

SCALE: 1"=5'-4"

90% SET

CALL UTILITY NOTIFICATION CENTER OF COLORADO

811

CALL 2-BUSINESS DAYS IN ADVANCE BEFORE YOU DIG, GRADE, OR EXCAVATE FOR THE MARKING OF UNDERGROUND MEMBER UTILITIES

REVISIONS:	NO.	DATE	REVISION DESCRIPTION:

Boulder County

Michael Baker INTERNATIONAL

BOULDER COUNTY TRANSPORTATION DEPARTMENT
ENGINEERING DIVISION

DESIGNED:	CAD:	CHECKED:	DATE:
DLT	BMT		5/3/2016

WAGONWHEEL GAP ROAD WALLS
RETAINING WALL 1
GENERAL LAYOUT (3 OF 3)

PROJECT NO: 4043.SEPT12C34 SHEET NO: 118

brett.terrell 6:11:23 PM 5/3/2016 pw:\\DCPWAPP1.bkr.mbakercorp.com:pwprod\Documents\Projects\Lakewood_Office\Boulder_County_Emergency_Transportation\T04\08_Sheet_Files\06_Structures\DGN\Walls\138200_WALL_04.dgn

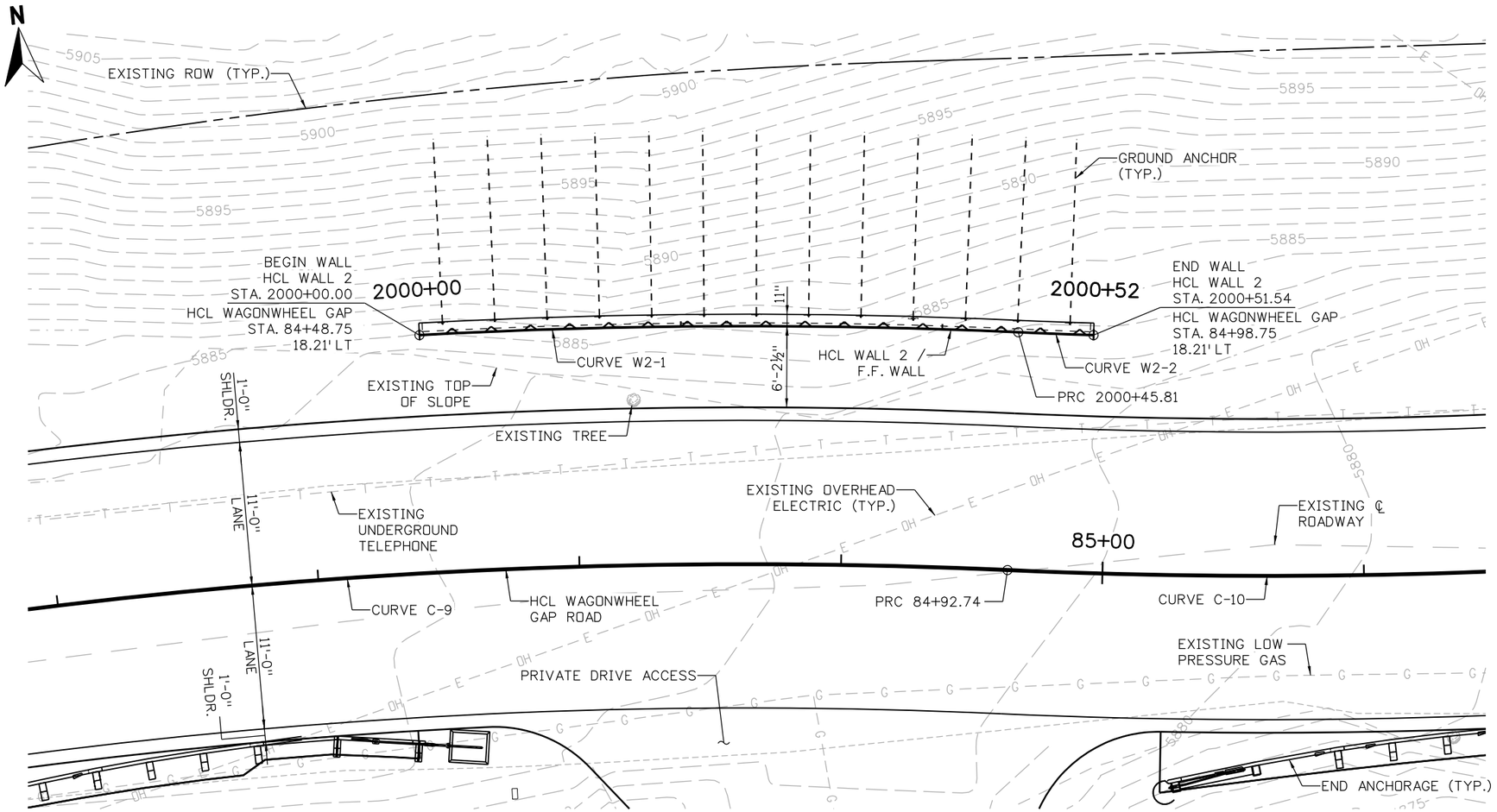

PLAN

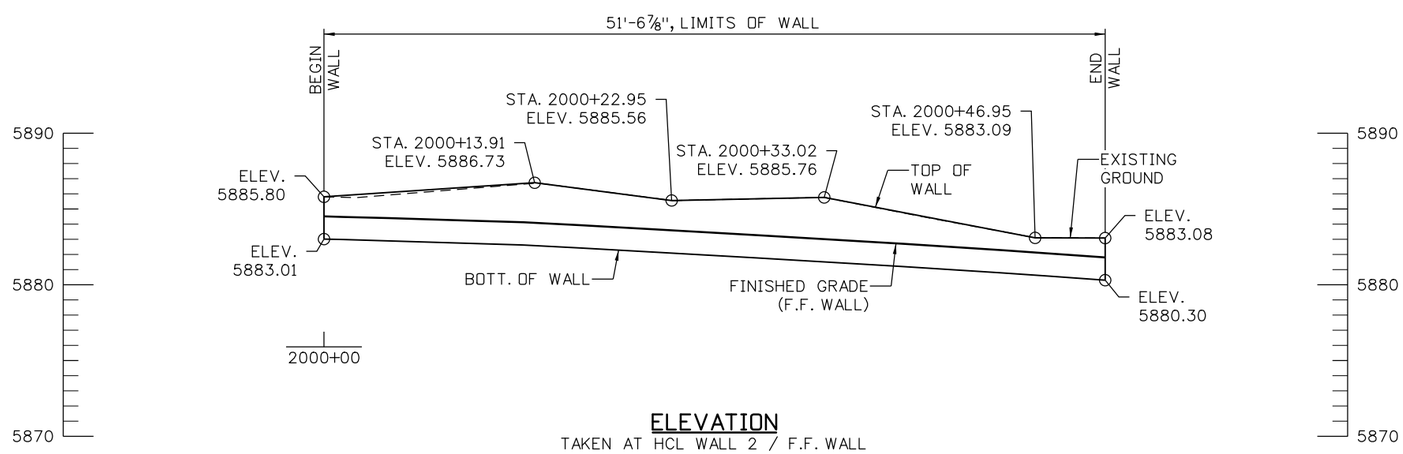

ELEVATION

TAKEN AT HCL WALL 2 / F.F. WALL

NOTES:

1. GROUND NAILS ARE GENERICALLY SHOWN. SEE GROUND NAIL LAYOUT FOR ACTUAL LOCATIONS.

CURVE W2-1 DATA:

Δ = 05° 43'41" RT
R = 458.21'
L = 45.81'
T = 22.92'
PI 2000+22.92
N 266627.20
E 54038.36

CURVE W2-2 DATA:

Δ = 00° 47'11" LT
R = 419.79'
L = 5.76'
T = 2.88'
PI 2000+48.69
N 266623.34
E 54063.87

5 0 5 10 FT
SCALE: 1"=10'

90% SET

CALL UTILITY NOTIFICATION CENTER OF COLORADO
811
CALL 2-BUSINESS DAYS IN ADVANCE BEFORE YOU DIG, GRADE, OR EXCAVATE FOR THE MARKING OF UNDERGROUND MEMBER UTILITIES

REVISIONS:	NO.	DATE	REVISION DESCRIPTION:

BOULDER COUNTY TRANSPORTATION DEPARTMENT
ENGINEERING DIVISION
Boulder County
Michael Baker INTERNATIONAL

DESIGNED:	CAD:	CHECKED:	DATE:
DLT	BMT		5/3/2016

WAGONWHEEL GAP ROAD WALLS
RETAINING WALL 2
GENERAL LAYOUT (1 OF 2)

PROJECT NO: 4043.SEPT12C34 | SHEET NO: 119

brett.terrell 6:11:43 PM 5/3/2016 pw:\\DCPWAPP1bkr.mbakercorp.com:pwprod\Documents\Projects\Lakewood_Office\Boulder_County_Emergency_Transportation\T04\08_Sheet_Files\06_Structures\DGN\Walls\138200_WALL_05.dgn

DESIGN DATA

SEISMIC ZONE 1

REINFORCED CONCRETE:

CONCRETE CLASS SHOTCRETE :	f'c = 4,500 PSI
REINFORCING STEEL:	fy = 60,000 PSI
WELDED WIRE FABRIC:	fy = 65,000 PSI
SEVERITY OF SULFATE EXPOSURE:	CLASS 0

SOIL PROPERTIES:

IN-SITU SOIL:

SOIL UNIT WEIGHT:	145 PCF
SOIL COHESION:	5,000 PSF
SOIL FRICTION ANGLE:	38°

NOTES:

1. FOR ARCHITECTURAL DETAILS, REFER TO CUT STONE VENEER DETAILS SHEET.
2. GROUND NAILS ARE GENERICALLY SHOWN.

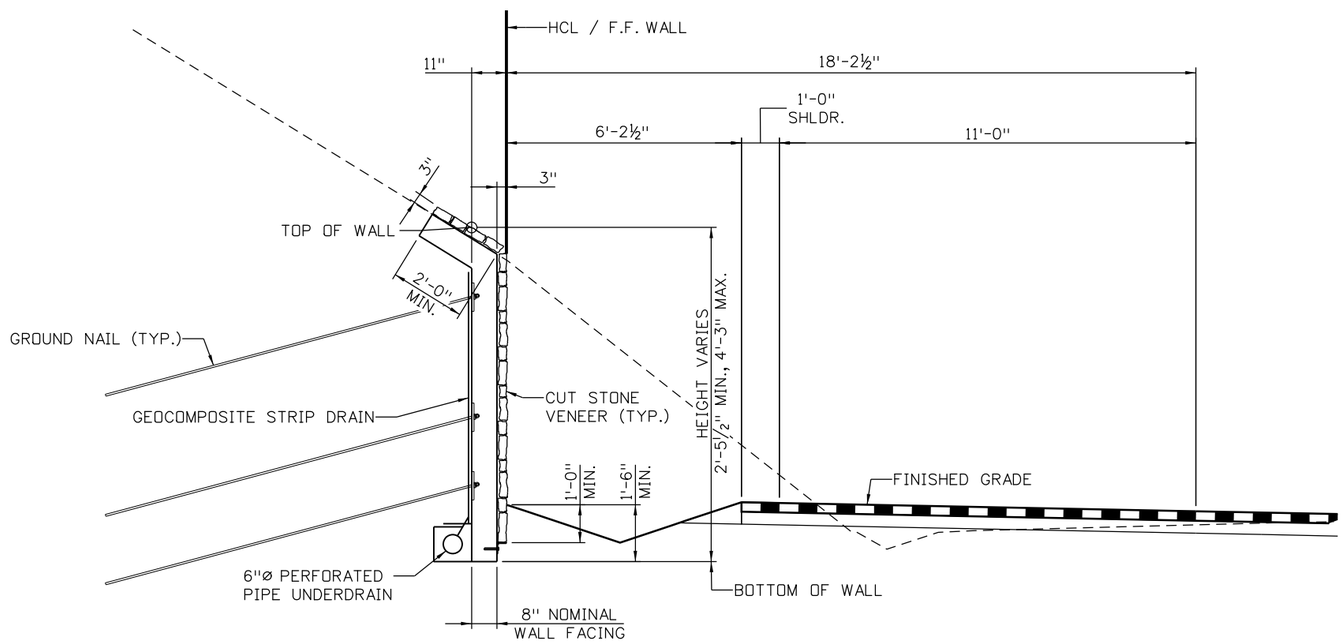

TYPICAL SECTION

LOOKING AHEAD STATION

2'-8" 0 2'-8" 5'-4"

SCALE: 1"=5'-4"

90% SET

CALL UTILITY NOTIFICATION CENTER OF COLORADO

811

CALL 2-BUSINESS DAYS IN ADVANCE BEFORE YOU DIG, GRADE, OR EXCAVATE FOR THE MARKING OF UNDERGROUND MEMBER UTILITIES

REVISIONS:	NO.	DATE	REVISION DESCRIPTION:

Boulder County

BOULDER COUNTY TRANSPORTATION DEPARTMENT
ENGINEERING DIVISION

Michael Baker INTERNATIONAL

DESIGNED:	CAD:	CHECKED:	DATE:
DLT	BMT		5/3/2016

WAGONWHEEL GAP ROAD WALLS
RETAINING WALL 2
GENERAL LAYOUT (2 OF 2)

PROJECT NO: 4043.SEPT12C34 | SHEET NO: 120

brett.terrell 6:12:02 PM 5/3/2016 pw:\\DCPWAPP1.bkr.mbakercorp.com:pwprod\Documents\Projects\Lakewood_Office\Boulder_County_Emergency_Transportation\T04\08_Sheet_Files\06_Structures\DGN\Walls\138200_WALL_06.dgn

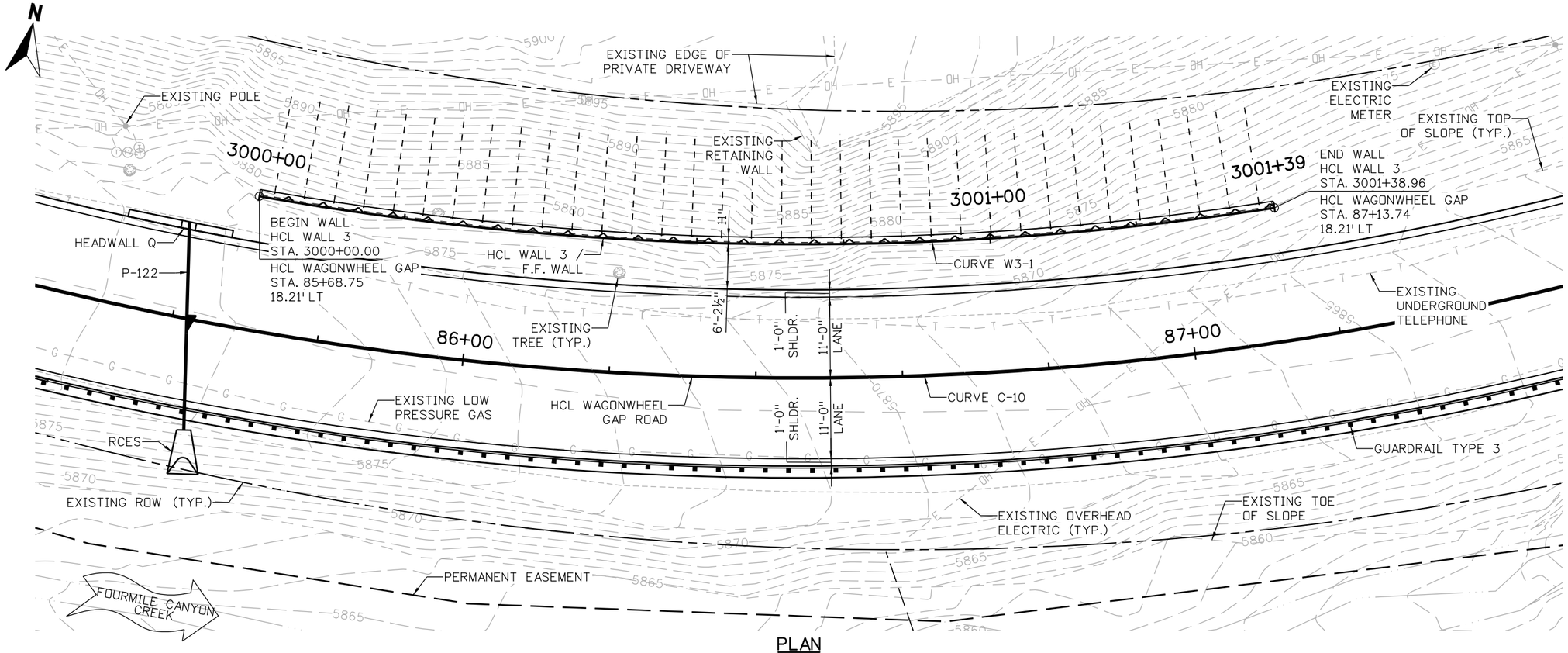

PLAN

NOTES:

1. FOR GUARDRAIL INFORMATION, REFER TO ROADWAY PLANS.
2. GROUND NAILS ARE GENERICALLY SHOWN. SEE GROUND NAIL LAYOUT FOR ACTUAL LOCATIONS.

CURVE W3-1 DATA

Δ = 18° 57'59" LT
R = 419.79'
L = 138.96'
T = 70.12'
PI 3000+70.12
N 266620.84
E 54203.74

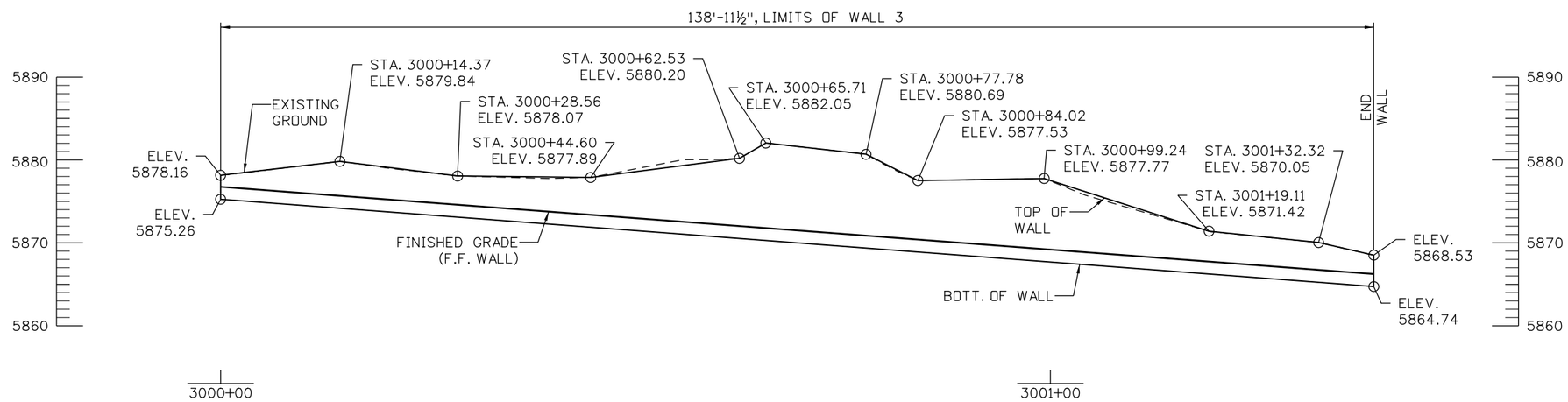

ELEVATION

TAKEN AT HCL WALL 3 / F.F. WALL

8 0 8 16 FT
SCALE: 1"=16'

90% SET

CALL UTILITY NOTIFICATION CENTER OF COLORADO
811
CALL 2-BUSINESS DAYS IN ADVANCE BEFORE YOU DIG, GRADE, OR EXCAVATE FOR THE MARKING OF UNDERGROUND MEMBER UTILITIES

REVISIONS:	NO.	DATE	REVISION DESCRIPTION:

BOULDER COUNTY TRANSPORTATION DEPARTMENT
ENGINEERING DIVISION
Boulder County
Michael Baker INTERNATIONAL

DESIGNED:	CAD:	CHECKED:	DATE:
DLT	BMT		5/3/2016

WAGONWHEEL GAP ROAD WALLS
RETAINING WALL 3
GENERAL LAYOUT (1 OF 2)

PROJECT NO: 4043.SEPT12C34 | SHEET NO: 121

brett.terrell 6:12:23 PM 5/3/2016 pw:\\DCPWAPP1.bkr.mbakercorp.com:pwprod\Documents\Projects\Lakewood_Office\Boulder_County_Emergency_Transportation\T04\08_Sheet_Files\06_Structures\DGN\Walls\138200_WALL_07.dgn

DESIGN DATA

SEISMIC ZONE 1

REINFORCED CONCRETE:

CONCRETE CLASS SHOTCRETE :	f'c = 4,500 PSI
REINFORCING STEEL:	fy = 60,000 PSI
WELDED WIRE FABRIC:	fy = 65,000 PSI
SEVERITY OF SULFATE EXPOSURE:	CLASS 0

SOIL PROPERTIES:

IN-SITU SOIL:

SOIL UNIT WEIGHT:	145 PCF
SOIL COHESION:	5,000 PSF
SOIL FRICTION ANGLE:	38°

NOTES:

1. FOR ARCHITECTURAL DETAILS, REFER TO CUT STONE VENEER DETAILS SHEET.
2. GROUND NAILS ARE GENERICALLY SHOWN.

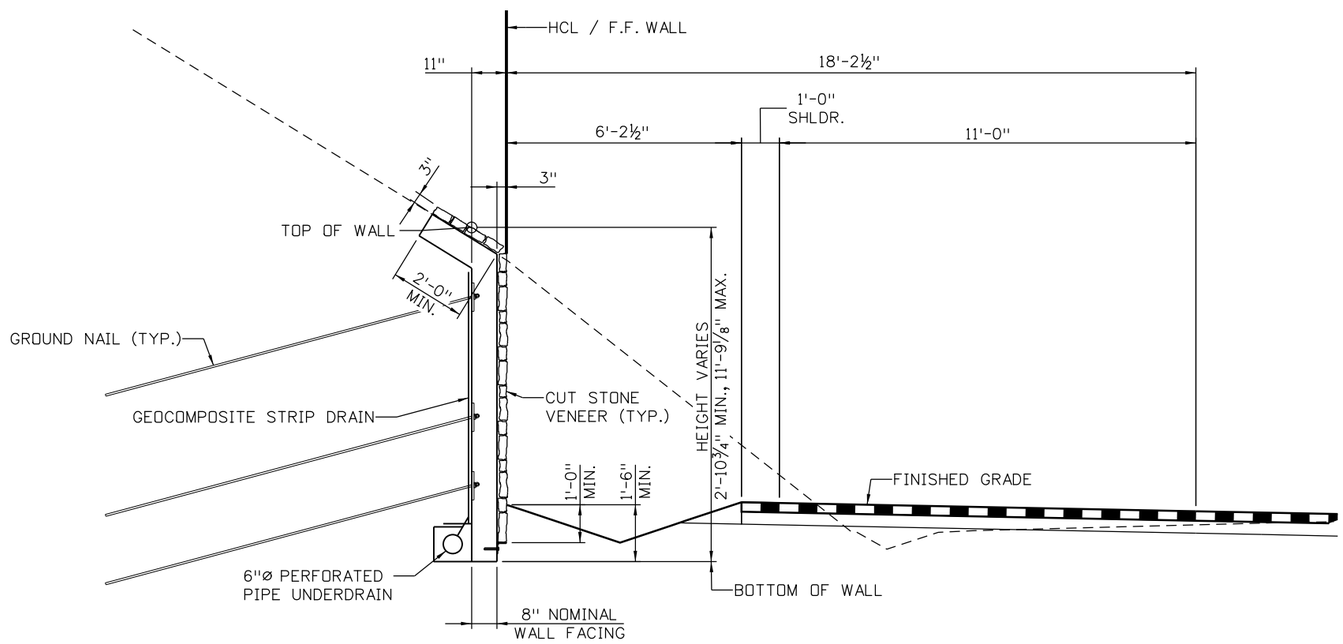

TYPICAL SECTION

LOOKING AHEAD STATION

2'-8" 0 2'-8" 5'-4"

SCALE: 1"=5'-4"

90% SET

CALL UTILITY NOTIFICATION CENTER OF COLORADO

811

CALL 2-BUSINESS DAYS IN ADVANCE BEFORE YOU DIG, GRADE, OR EXCAVATE FOR THE MARKING OF UNDERGROUND MEMBER UTILITIES

REVISIONS:	NO.	DATE	REVISION DESCRIPTION:

Boulder County

Michael Baker INTERNATIONAL

BOULDER COUNTY TRANSPORTATION DEPARTMENT
ENGINEERING DIVISION

DESIGNED:	CAD:	CHECKED:	DATE:
DLT	BMT		5/3/2016

WAGONWHEEL GAP ROAD WALLS
RETAINING WALL 3
GENERAL LAYOUT (2 OF 2)

PROJECT NO: 4043.SEPT12C34 SHEET NO: 122

brett.terrell 6:12:41 PM 5/3/2016 pw:\\DCPWAPP1.bkr.mbakercorp.com:pwprod\Documents\Projects\Lakewood_Office\Boulder_County_Emergency_Transportation\T04\08_Sheet_Files\06_Structures\DGN\Walls\138200_WALL_08.dgn

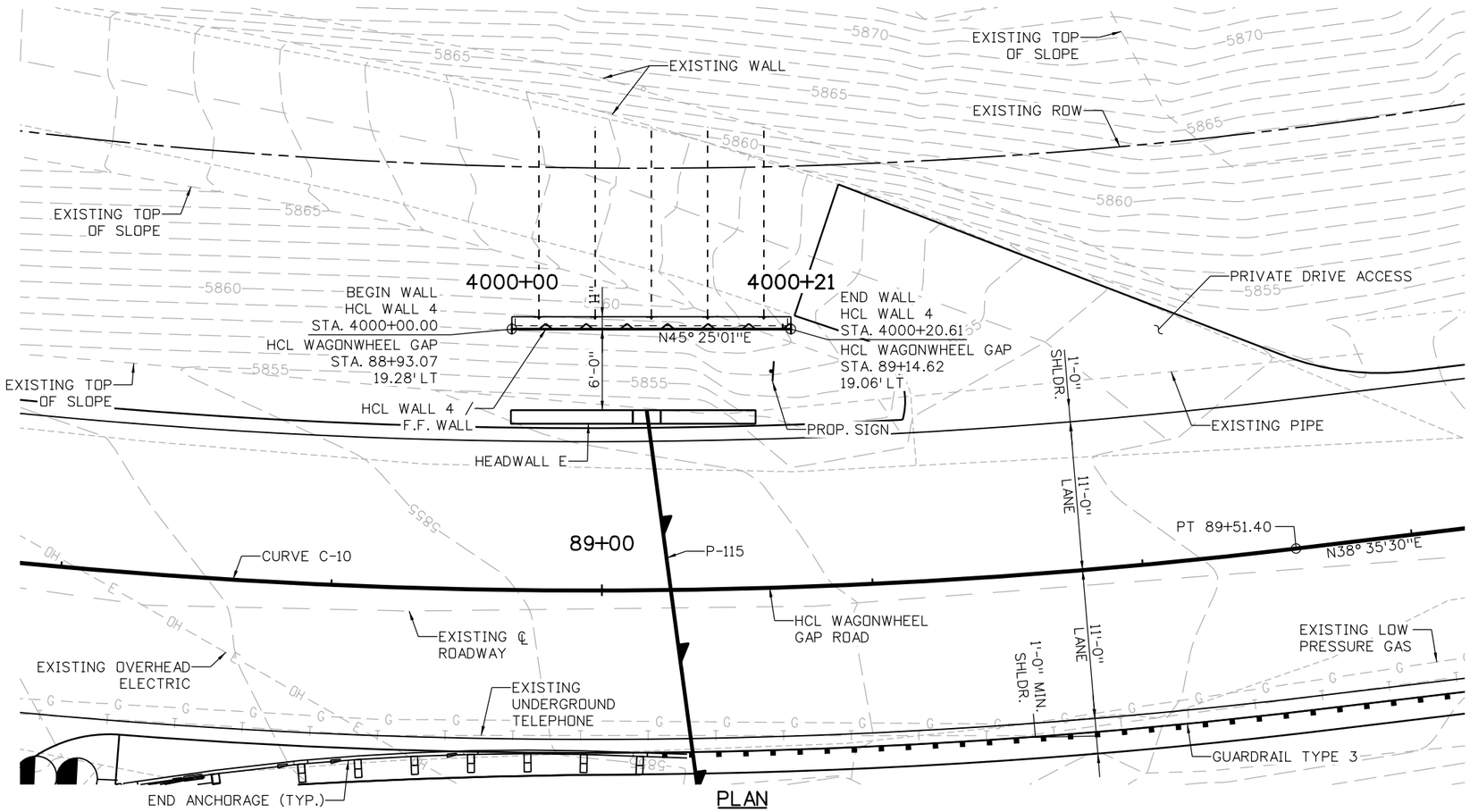

PLAN

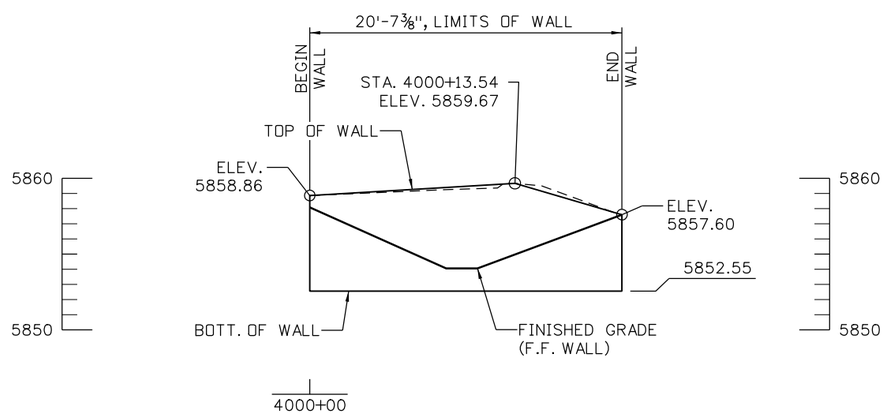

ELEVATION

TAKEN AT HCL WALL 4 / F.F. WALL

NOTES:

1. FOR END SECTIONS, HEADWALL AND WINGWALL DETAILS, REFER TO DRAINAGE PLANS.
2. FOR GUARDRAIL INFORMATION REFER TO ROADWAY PLANS.
3. GROUND NAILS ARE GENERICALLY SHOWN. SEE GROUND NAIL LAYOUT FOR ACTUAL LOCATIONS.

5 0 5 10 FT
SCALE: 1"=10'

90% SET

CALL UTILITY NOTIFICATION CENTER OF COLORADO
811
CALL 2-BUSINESS DAYS IN ADVANCE BEFORE YOU DIG, GRADE, OR EXCAVATE FOR THE MARKING OF UNDERGROUND MEMBER UTILITIES

REVISIONS:	NO.	DATE	REVISION DESCRIPTION:

Boulder County

BOULDER COUNTY TRANSPORTATION DEPARTMENT
ENGINEERING DIVISION

Michael Baker INTERNATIONAL

DESIGNED:	CAD:	CHECKED:	DATE:
DLT	BMT		5/3/2016

WAGONWHEEL GAP ROAD WALLS
RETAINING WALL 4
GENERAL LAYOUT (1 OF 2)

PROJECT NO: 4043.SEPT12C34 | SHEET NO: 123

brett.terrell 6:13:02 PM 5/3/2016 pw:\\DCPWAPP1.bkr.mbakercorp.com:pwprod\Documents\Projects\Lakewood_Office\Boulder_County_Emergency_Transportation\T04\08_Sheet_Files\06_Structures\DGN\Walls\138200_WALL_09.dgn

DESIGN DATA

SEISMIC ZONE 1

REINFORCED CONCRETE:

CONCRETE CLASS SHOTCRETE :	f'c = 4,500 PSI
REINFORCING STEEL:	fy = 60,000 PSI
WELDED WIRE FABRIC:	fy = 65,000 PSI
SEVERITY OF SULFATE EXPOSURE:	CLASS 0

SOIL PROPERTIES:

IN-SITU SOIL:

SOIL UNIT WEIGHT:	145 PCF
SOIL COHESION:	5,000 PSF
SOIL FRICTION ANGLE:	38°

NOTES:

1. FOR ARCHITECTURAL DETAILS, REFER TO CUT STONE VENEER DETAILS SHEET.
2. GROUND NAILS ARE GENERICALLY SHOWN.

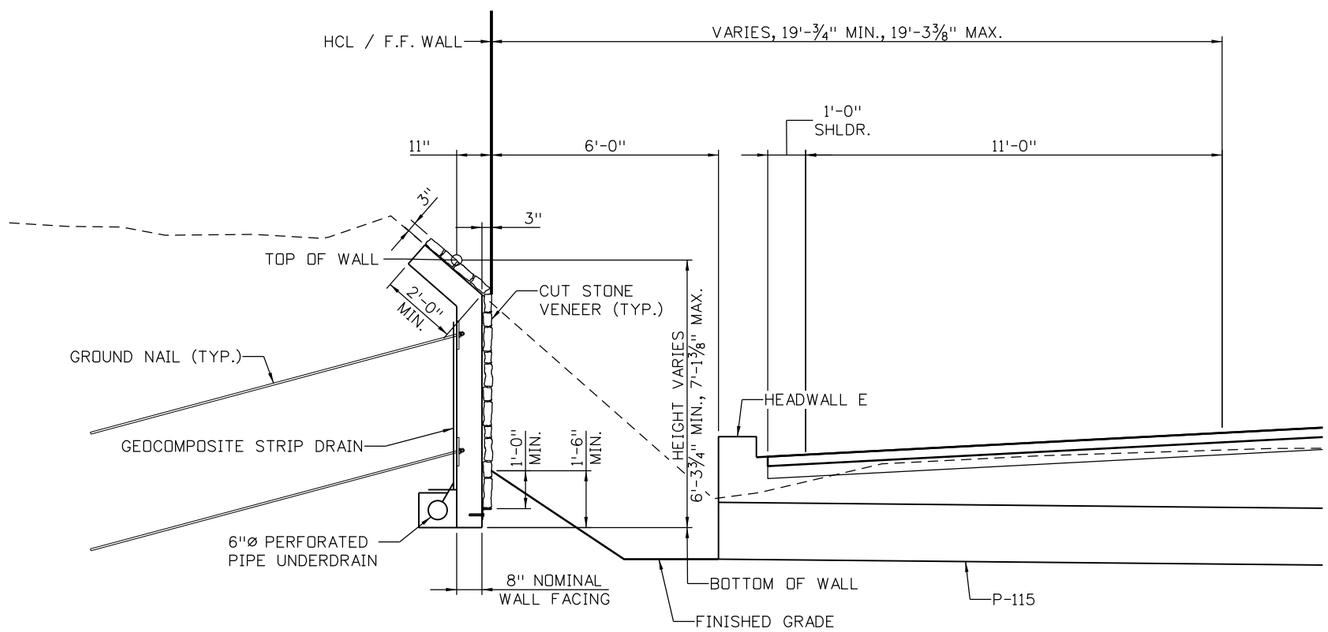

TYPICAL SECTION

LOOKING AHEAD STATION

2'-8" 0 2'-8" 5'-4"

SCALE: 1"=5'-4"

90% SET

CALL UTILITY NOTIFICATION CENTER OF COLORADO

811

CALL 2-BUSINESS DAYS IN ADVANCE BEFORE YOU DIG, GRADE, OR EXCAVATE FOR THE MARKING OF UNDERGROUND MEMBER UTILITIES

REVISIONS:	NO.	DATE	REVISION DESCRIPTION:

Boulder County

BOULDER COUNTY TRANSPORTATION DEPARTMENT
ENGINEERING DIVISION

Michael Baker INTERNATIONAL

DESIGNED:	CAD:	CHECKED:	DATE:
DLT	BMT		5/3/2016

WAGONWHEEL GAP ROAD WALLS

RETAINING WALL 4
GENERAL LAYOUT (2 OF 2)

PROJECT NO: 4043.SEPT12C34 | SHEET NO: 124

brett.terrell 6:13:23 PM 5/3/2016 pw:\\DCPWAPP1.bkr.mbakercorp.com:pwprod\Documents\Projects\Lakewood_Office\Boulder_County_Emergency_Transportation\T04\08_Sheet_Files\06_Structures\DGN\Walls\138200_WALL_10.dgn

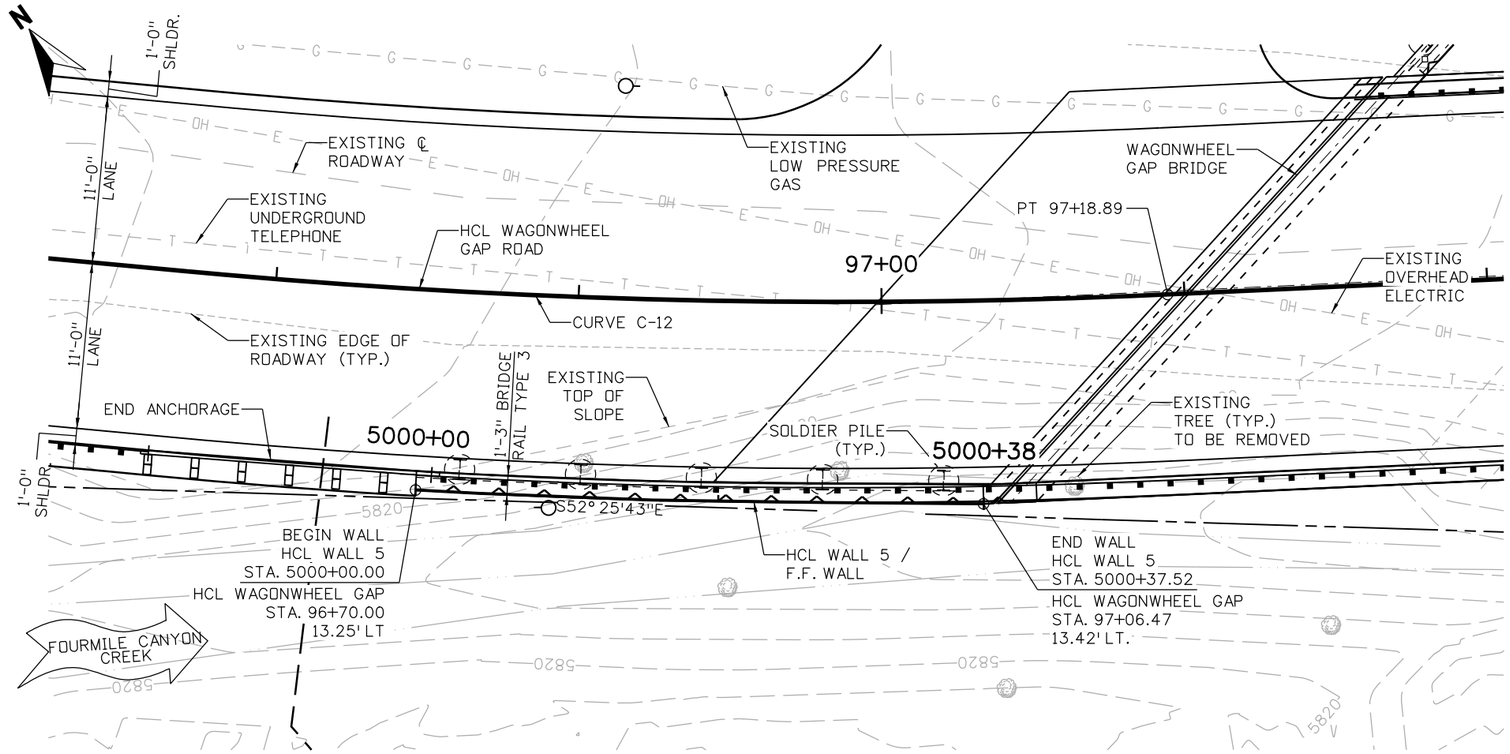

PLAN

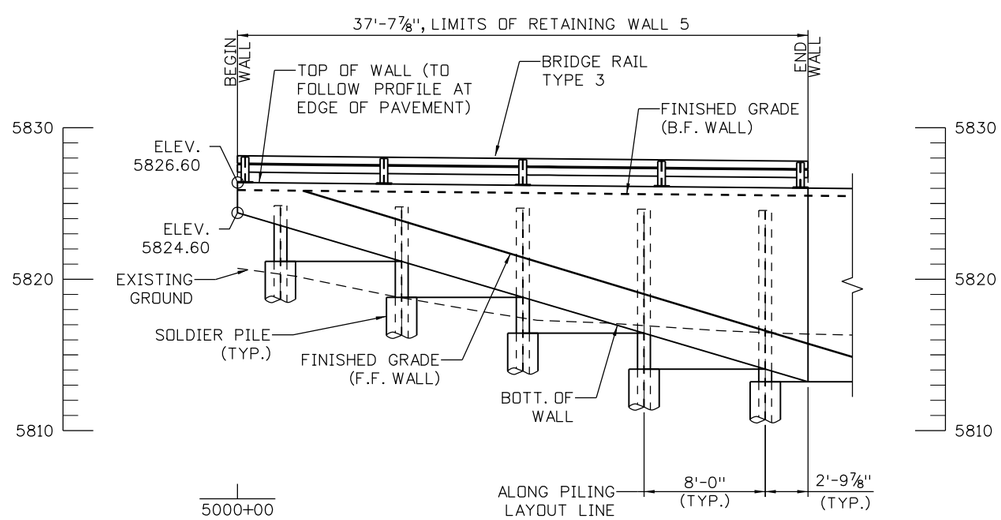

ELEVATION

TAKEN AT HCL WALL 5 / F.F. WALL

NOTES:

1. GUARDRAIL INFORMATION REFER TO ROADWAY PLANS.
2. FOR BRIDGE DETAILS, SEE BRIDGE PLANS.

5 0 5 10 FT

SCALE: 1"=10'

90% SET

CALL UTILITY NOTIFICATION CENTER OF COLORADO

811

CALL 2-BUSINESS DAYS IN ADVANCE BEFORE YOU DIG, GRADE, OR EXCAVATE FOR THE MARKING OF UNDERGROUND MEMBER UTILITIES

REVISIONS:	NO.	DATE	REVISION DESCRIPTION:

Boulder County

BOULDER COUNTY TRANSPORTATION DEPARTMENT
ENGINEERING DIVISION

Michael Baker INTERNATIONAL

DESIGNED:	CAD:	CHECKED:	DATE:
DLT	BMT		5/3/2016

WAGONWHEEL GAP ROAD WALLS

RETAINING WALL 5
GENERAL LAYOUT (1 OF 2)

PROJECT NO: 4043.SEPT12C34 | SHEET NO: 125

brett.terrell 6:13:43 PM 5/3/2016 pw:\\DCPWAPP1.bkr.mbakercorp.com:pwprod\Documents\Projects\Lakewood_Office\Boulder_County_Emergency_Transportation\T04\08_Sheet_Files\06_Structures\DGN\Walls\138200_WALL_11.dgn

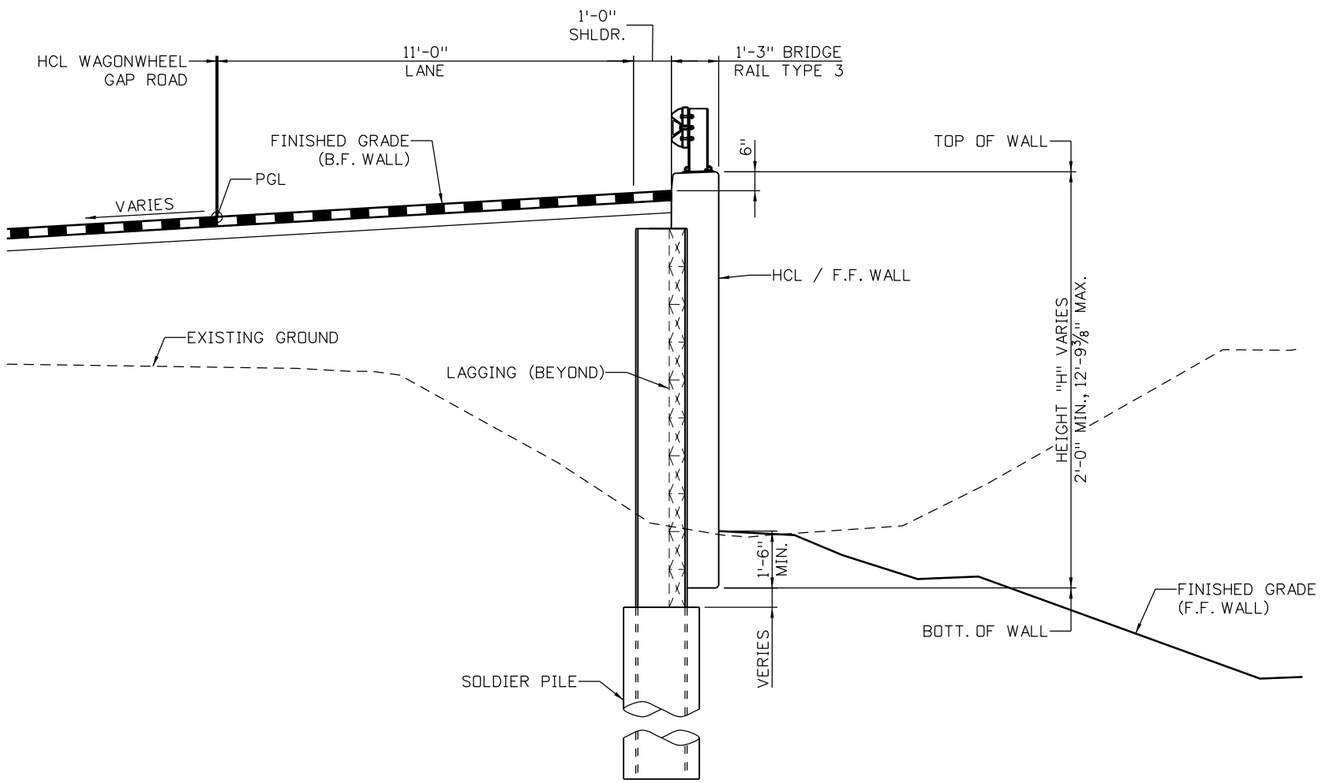

TYPICAL SECTION

LOOKING AHEAD STATION

DESIGN DATA

AASHTO LRFD BRIDGE DESIGN SPECIFICATIONS, SIXTH EDITION WITH INTERIMS THROUGH 2012

DESIGN METHOD:	LOAD AND RESISTANCE FACTOR DESIGN (LRFD)
LIVE LOAD:	HL-93 (DESIGN TRUCK OR DESIGN TANDEM, AND DESIGN LANE LOAD)
SEISMIC ZONE 1	
REINFORCED CONCRETE:	
CLASS D CONCRETE:	f'c = 4,500 PSI
REINFORCING STEEL:	fy = 60,000 PSI
SEVERITY OF SULFATE EXPOSURE:	CLASS 0
CAISSON CONCRETE:	
CLASS BZ CONCRETE:	f'c = 4,000 PSI
SEVERITY OF SULFATE EXPOSURE:	CLASS 0
STRUCTURAL STEEL:	
AASHTO M270 (ASTM A992) GRADE 50:	fy = 50,000 PSI

SOIL PROPERTIES:

ABOVE BOTTOM OF WALL:	
SOIL UNIT WEIGHT:	120 PCF
SOIL FRICTION ANGLE:	32°
ACTIVE HORIZONTAL PRESSURE COEFFICEINT WITH LEVEL BACKSLOPE:	0.238
BELOW BOTTOM OF WALL:	
SOIL UNIT WEIGHT:	135 PCF
SOIL FRICTION ANGLE:	38°
ACTIVE HORIZONTAL PRESSURE COEFFICEINT WITH LEVEL BACKSLOPE:	0.283
PASSIVE HORIZONTAL PRESSURE COEFFICEINT WITH LEVEL FORESLOPE:	1.290

2 0 2 4 FT
SCALE: 1"=4'

90% SET

CALL UTILITY NOTIFICATION CENTER OF COLORADO
811
CALL 2-BUSINESS DAYS IN ADVANCE BEFORE YOU DIG, GRADE, OR EXCAVATE FOR THE MARKING OF UNDERGROUND MEMBER UTILITIES

REVISIONS: NO.	DATE	REVISION DESCRIPTION:

Boulder County
Michael Baker INTERNATIONAL

BOULDER COUNTY TRANSPORTATION DEPARTMENT
ENGINEERING DIVISION

DESIGNED:	CAD:	CHECKED:	DATE:
DLT	BMT		5/3/2016

WAGONWHEEL GAP ROAD WALLS
RETAINING WALL 5
GENERAL LAYOUT (2 OF 2)

PROJECT NO: 4043.SEPT12C34 SHEET NO: 126

brett.terrell 6:14:02 PM 5/3/2016 pw:\\DCPWAPP1.bkr.mbakercorp.com:pwprod\Documents\Projects\Lakewood_Office\Boulder_County_Emergency_Transportation\T04\08_Sheet_Files\06_Structures\DGN\Walls\138200_WALL_12.dgn

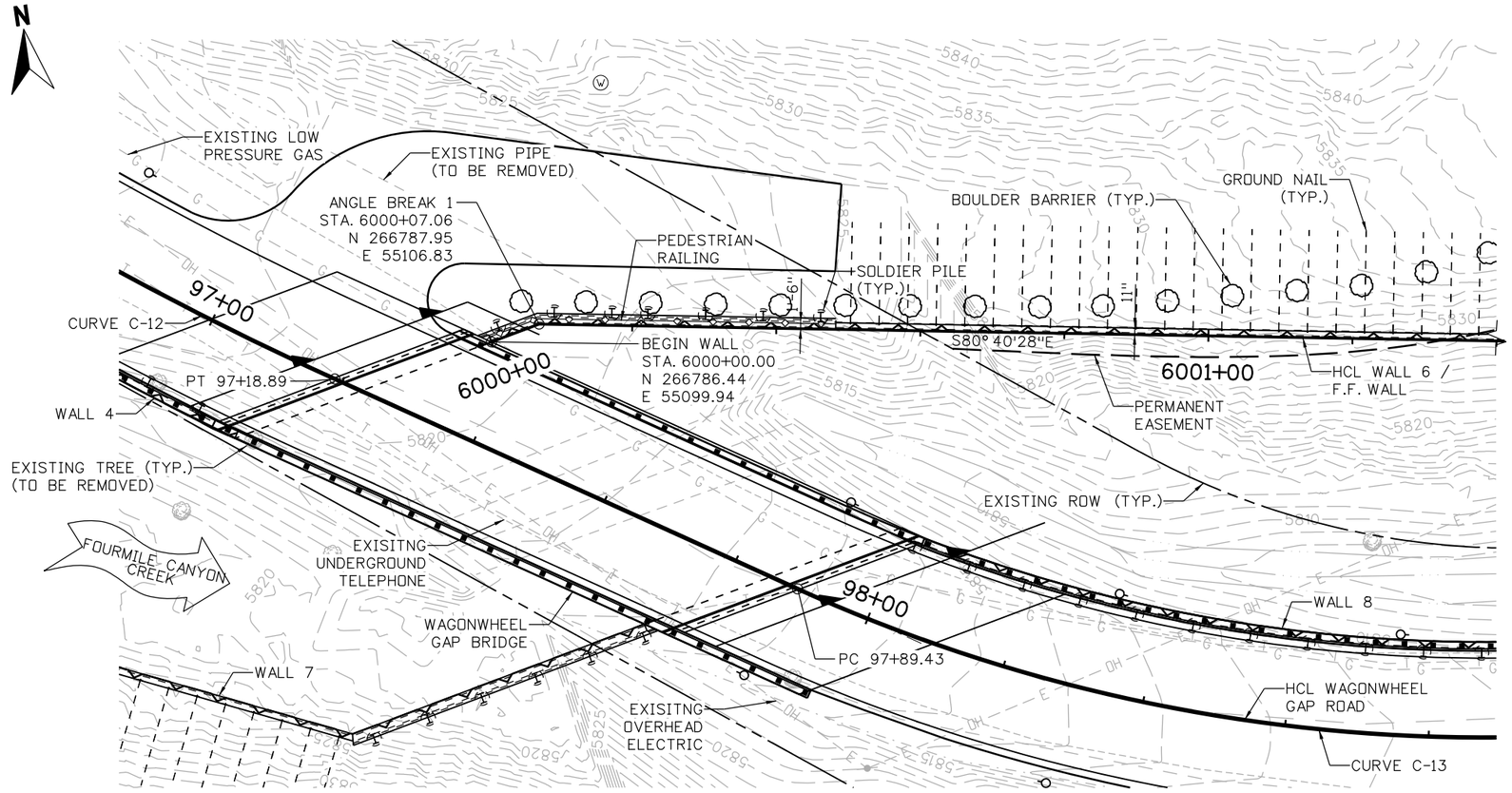

PLAN

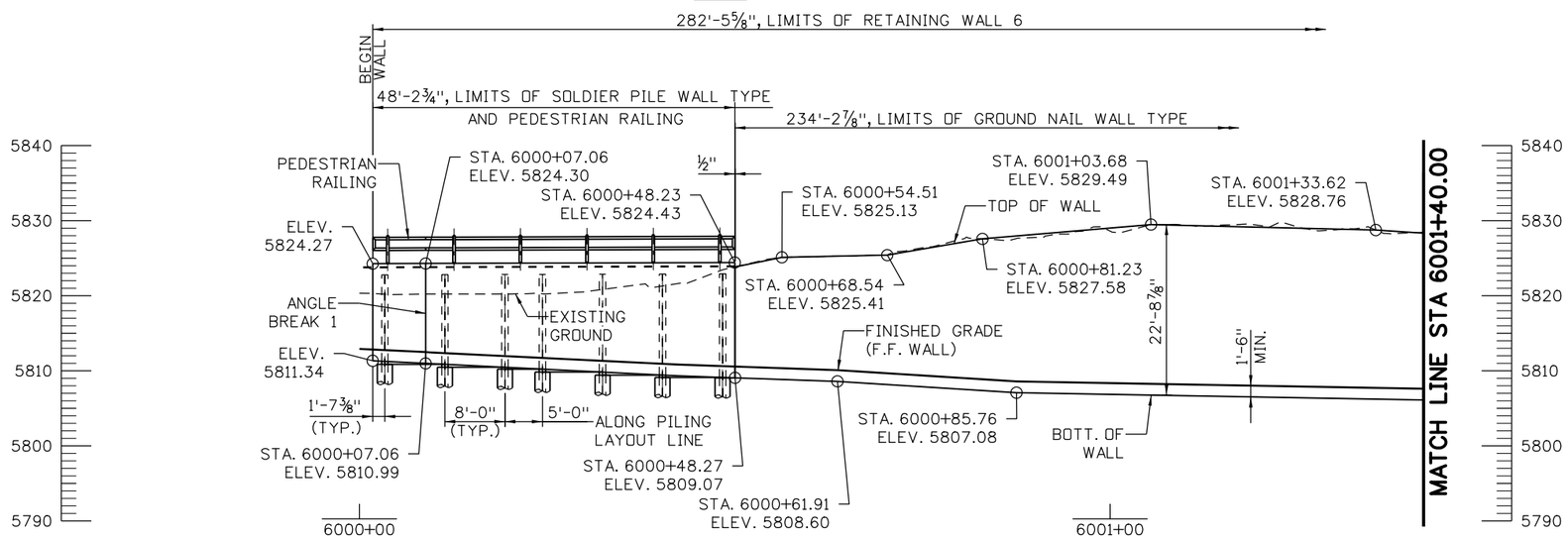

ELEVATION

TAKEN AT HCL WALL 6 / F.F. WALL

NOTES:

2. FOR GUARDRAIL INFORMATION REFER TO ROADWAY PLANS.
5. GROUND NAILS ARE GENERICALLY SHOWN. SEE GROUND NAIL LAYOUT FOR ACTUAL LOCATIONS.
6. SCOUR ANALYSIS HAS NOT BEEN COMPLETED AT THIS TIME. BOTTOM OF WALL IS TO BE REVISED TO THESE LIMITS.
7. SOLDIER PILE WALLS MAY NEED TO BE ANCHORED TO AVOID EXCESSIVE DEFLECTION.
8. FOR BRIDGE DETAILS, SEE BRIDGE PLANS.

10 0 10 20 FT
SCALE: 1"=20'

90% SET

CALL UTILITY NOTIFICATION CENTER OF COLORADO
811
CALL 2-BUSINESS DAYS IN ADVANCE BEFORE YOU DIG, GRADE, OR EXCAVATE FOR THE MARKING OF UNDERGROUND MEMBER UTILITIES

REVISIONS:	NO.	DATE	REVISION DESCRIPTION:

Boulder County
BOULDER COUNTY TRANSPORTATION DEPARTMENT
ENGINEERING DIVISION
Michael Baker INTERNATIONAL

DESIGNED:	CAD:	CHECKED:	DATE:
DLT	BMT		5/3/2016

WAGONWHEEL GAP ROAD WALLS
RETAINING WALL 6
GENERAL LAYOUT (1 OF 3)
PROJECT NO: 4043.SEPT12C34 | SHEET NO: 127

brett.terrell 6:14:22 PM 5/3/2016 pw:\\DCPWAPP1.bkr.mbakercorp.com:pwprod\Documents\Projects\Lakewood_Office\Boulder_County_Emergency_Transportation\T04\08_Sheet_Files\06_Structures\DGN\Walls\138200_WALL_13.dgn

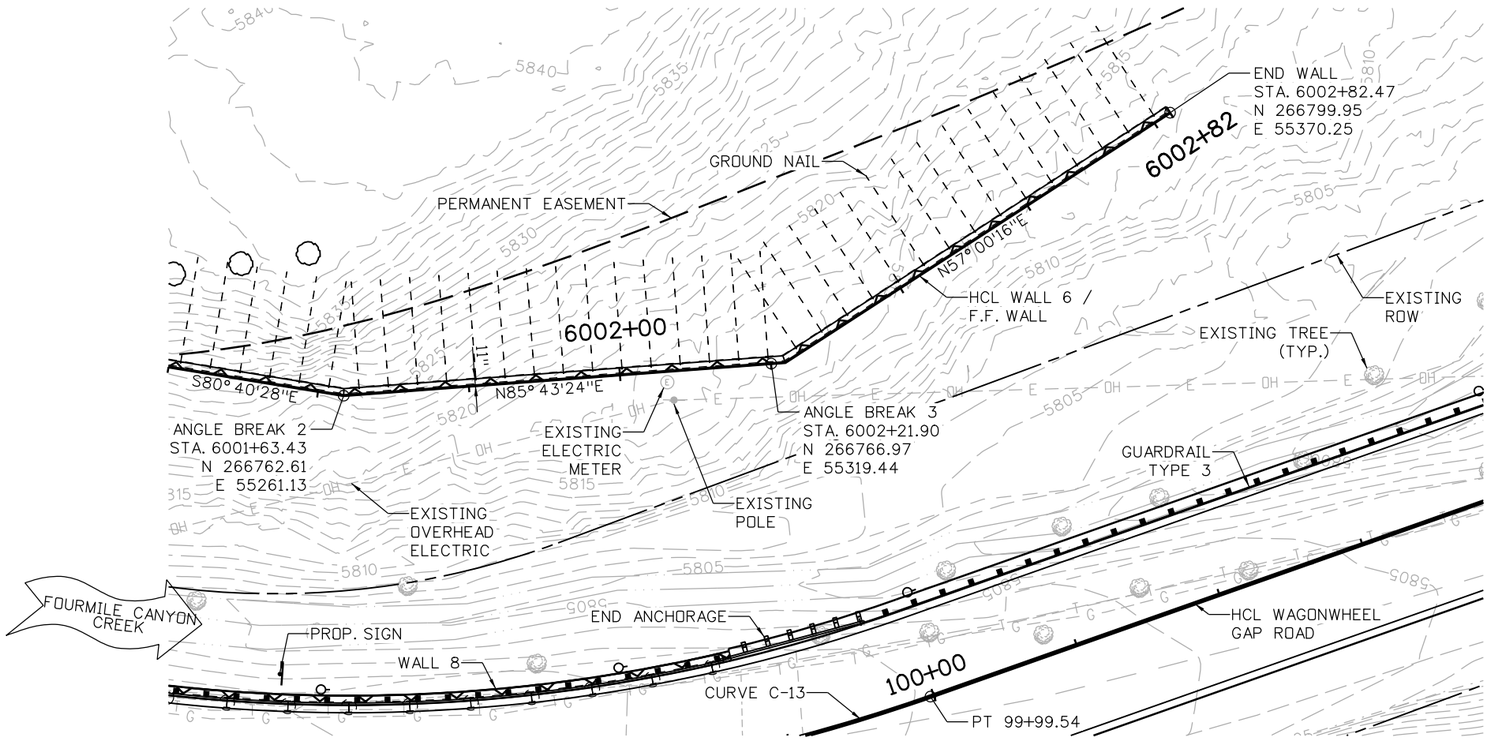

NOTES:

1. FOR GUARDRAIL INFORMATION REFER TO ROADWAY PLANS.
2. GROUND NAILS ARE GENERICALLY SHOWN. SEE GROUND NAIL LAYOUT FOR ACTUAL LOCATIONS.

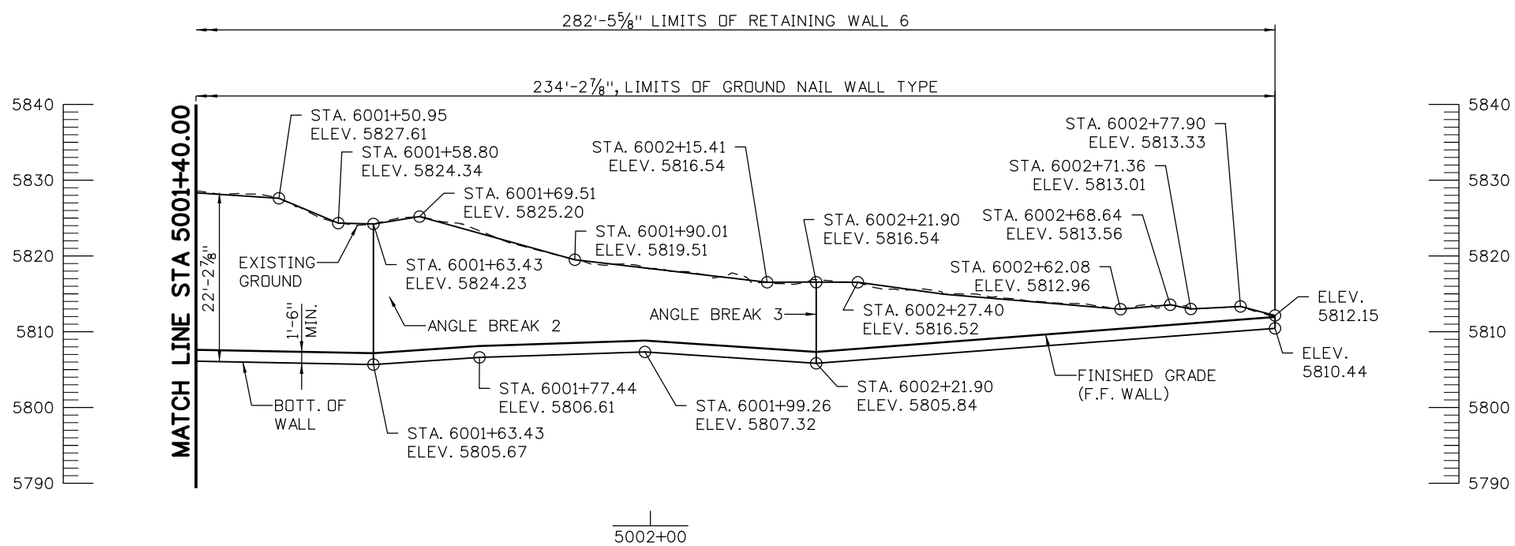

ELEVATION

TAKEN AT HCL WALL 6 / F.F. WALL

90% SET

CALL UTILITY NOTIFICATION CENTER OF COLORADO
811
CALL 2-BUSINESS DAYS IN ADVANCE BEFORE YOU DIG, GRADE, OR EXCAVATE FOR THE MARKING OF UNDERGROUND MEMBER UTILITIES

REVISIONS:	NO.	DATE	REVISION DESCRIPTION:

Boulder County

Michael Baker INTERNATIONAL

BOULDER COUNTY TRANSPORTATION DEPARTMENT
ENGINEERING DIVISION

DESIGNED:	CAD:	CHECKED:	DATE:
DLT	BMT		5/3/2016

WAGONWHEEL GAP ROAD WALLS
RETAINING WALL 6
GENERAL LAYOUT (2 OF 3)

PROJECT NO: 4043.SEPT12C34 | SHEET NO: 128

brett.terrell 6:14:40 PM 5/3/2016 pw:\\DCPWAPP1.bkr.mbakercorp.com:pwprod\Documents\Projects\Lakewood_Office\Boulder_County_Emergency_Transportation\T04\08_Sheet_Files\06_Structures\DGN\Walls\138200_WALL_14.dgn

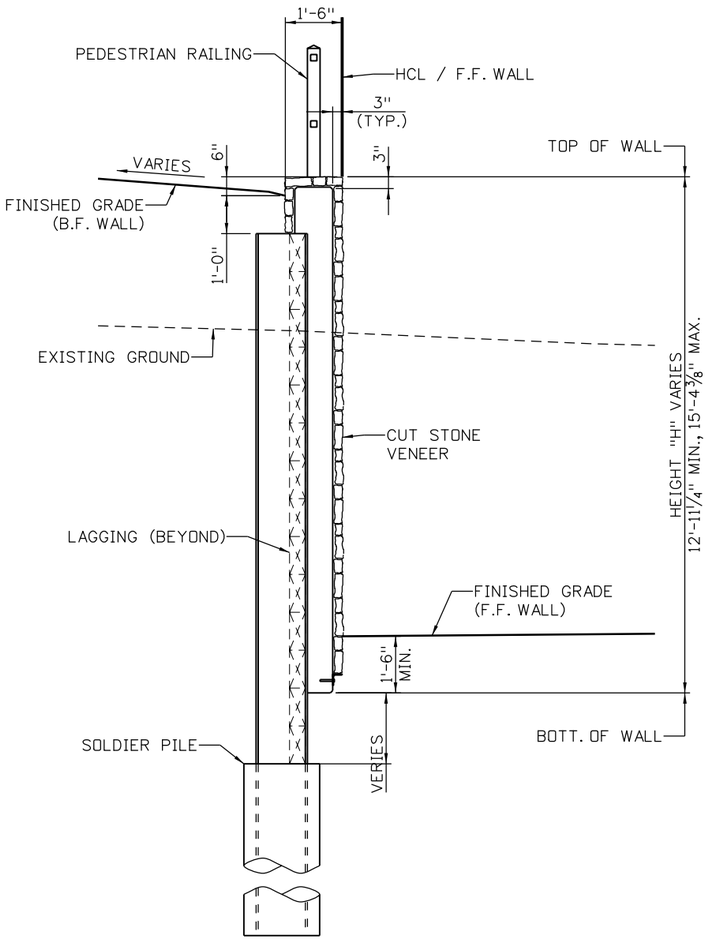

TYPICAL SECTION

LOOKING AHEAD STATION
TAKEN AT ℄ SOLDIER PILE

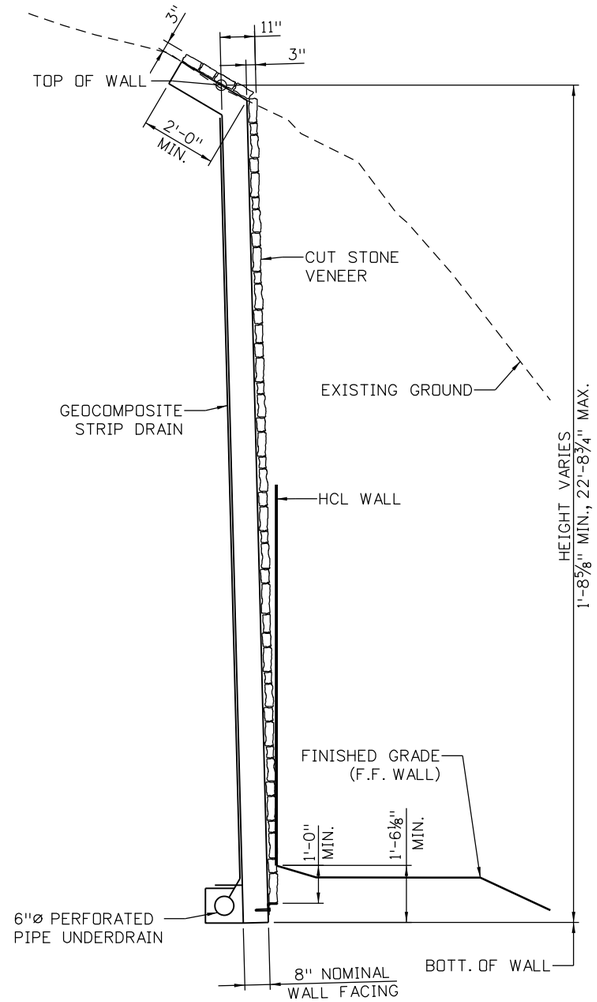

TYPICAL SECTION

LOOKING AHEAD STATION

DESIGN DATA

AASHTO LRFD BRIDGE DESIGN SPECIFICATIONS, SIXTH EDITION WITH INTERIMS THROUGH 2012

DESIGN METHOD:	LOAD AND RESISTANCE FACTOR DESIGN (LRFD)
LIVE LOAD:	HL-93 (DESIGN TRUCK OR DESIGN TANDEM, AND DESIGN LANE LOAD)
SEISMIC ZONE 1	
REINFORCED CONCRETE:	
CLASS D CONCRETE:	f'c = 4,500 PSI
REINFORCING STEEL:	fy = 60,000 PSI
SEVERITY OF SULFATE EXPOSURE:	CLASS 0
CAISSON CONCRETE:	
CLASS BZ CONCRETE:	f'c = 4,000 PSI
SEVERITY OF SULFATE EXPOSURE:	CLASS 0
STRUCTURAL STEEL:	
AASHTO M270 (ASTM A992) GRADE 50:	fy = 50,000 PSI
SOIL PROPERTIES:	
ABOVE BOTTOM OF WALL:	
SOIL UNIT WEIGHT:	120 PCF
SOIL FRICTION ANGLE:	32°
ACTIVE HORIZONTAL PRESSURE COEFFICEINT WITH LEVEL BACKSLOPE:	0.238
BELOW BOTTOM OF WALL:	
SOIL UNIT WEIGHT:	135 PCF
SOIL FRICTION ANGLE:	38°
ACTIVE HORIZONTAL PRESSURE COEFFICEINT WITH LEVEL BACKSLOPE:	0.283
PASSIVE HORIZONTAL PRESSURE COEFFICEINT WITH LEVEL FORESLOPE:	1.290

DESIGN DATA

SEISMIC ZONE 1

REINFORCED CONCRETE:	
CONCRETE CLASS SHOTCRETE :	f'c = 4,500 PSI
REINFORCING STEEL:	fy = 60,000 PSI
WELDED WIRE FABRIC:	fy = 65,000 PSI
SEVERITY OF SULFATE EXPOSURE:	CLASS 0
SOIL PROPERTIES:	
IN-SITU SOIL:	
SOIL UNIT WEIGHT:	145 PCF
SOIL COHESION:	5,000 PSF
SOIL FRICTION ANGLE:	38°

NOTES:

1. FOR ARCHITECTURAL DETAILS, REFER TO CUT STONE VENEER DETAILS SHEET.
2. FOR PEDESTRIAN RAILING DETAILS, REFER TO PEDESTRIAN RAILING (STEEL) (SPECIAL) DETAILS SHEET.

2 0 2 4 FT
SCALE: 1"=4'

90% SET

CALL UTILITY NOTIFICATION CENTER OF COLORADO
811
CALL 2-BUSINESS DAYS IN ADVANCE BEFORE YOU DIG, GRADE, OR EXCAVATE FOR THE MARKING OF UNDERGROUND MEMBER UTILITIES

REVISIONS:	NO.	DATE	REVISION DESCRIPTION:

Boulder County
Michael Baker INTERNATIONAL

BOULDER COUNTY TRANSPORTATION DEPARTMENT
ENGINEERING DIVISION

DESIGNED:	CAD:	CHECKED:	DATE:
DLT	BMT		5/3/2016

WAGONWHEEL GAP ROAD WALLS
RETAINING WALL 6
GENERAL LAYOUT (3 OF 3)

PROJECT NO: 4043.SEPT12C34 | SHEET NO: 129

brett.terrell 6:14:59 PM 5/3/2016 pw:\\DCPWAPP1bkr.mbakercorp.com:pwprod\Documents\Projects\Lakewood_Office\Boulder_County_Emergency_Transportation\T04\08_Sheet_Files\06_Structures\DGN\Walls\138200_WALL_15.dgn

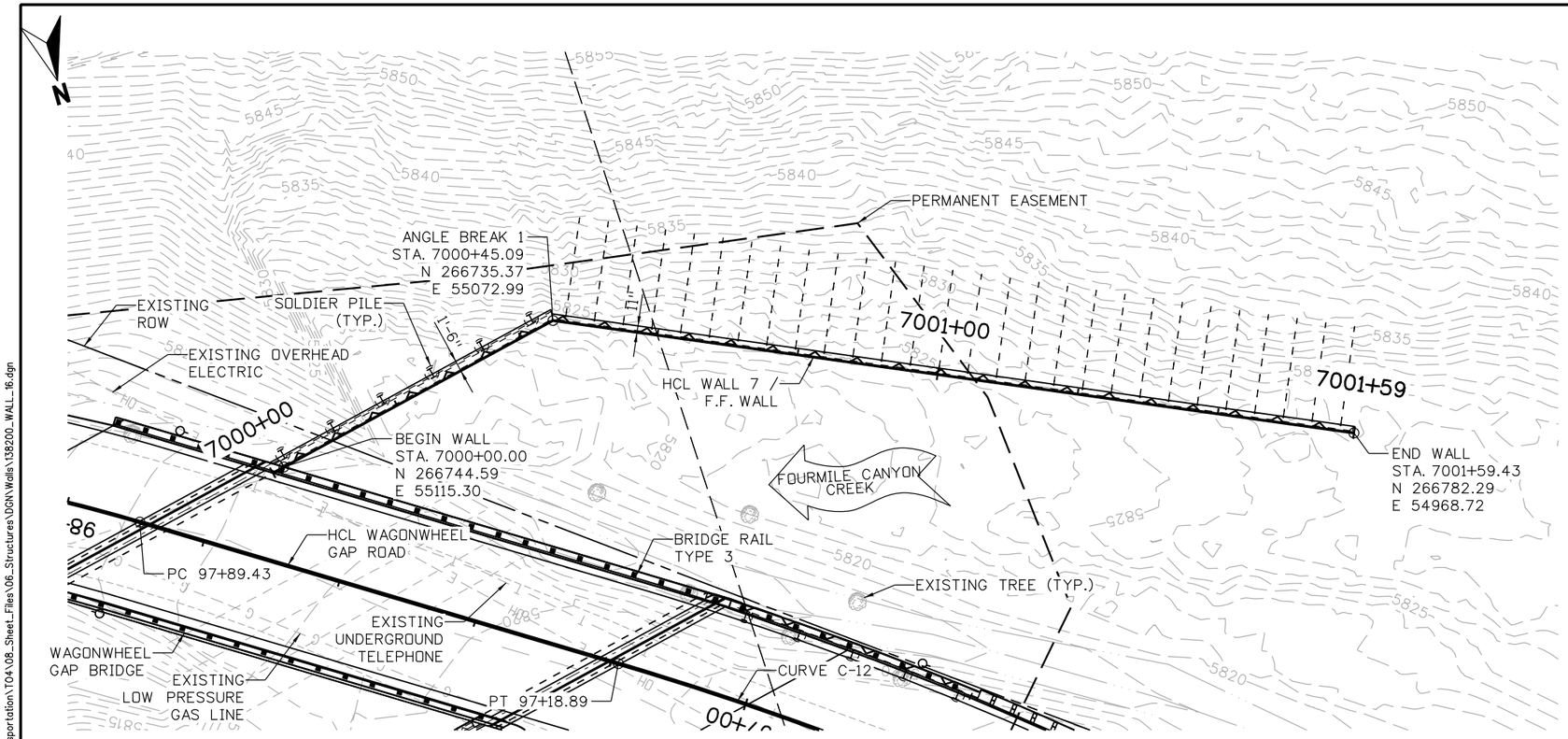

PLAN

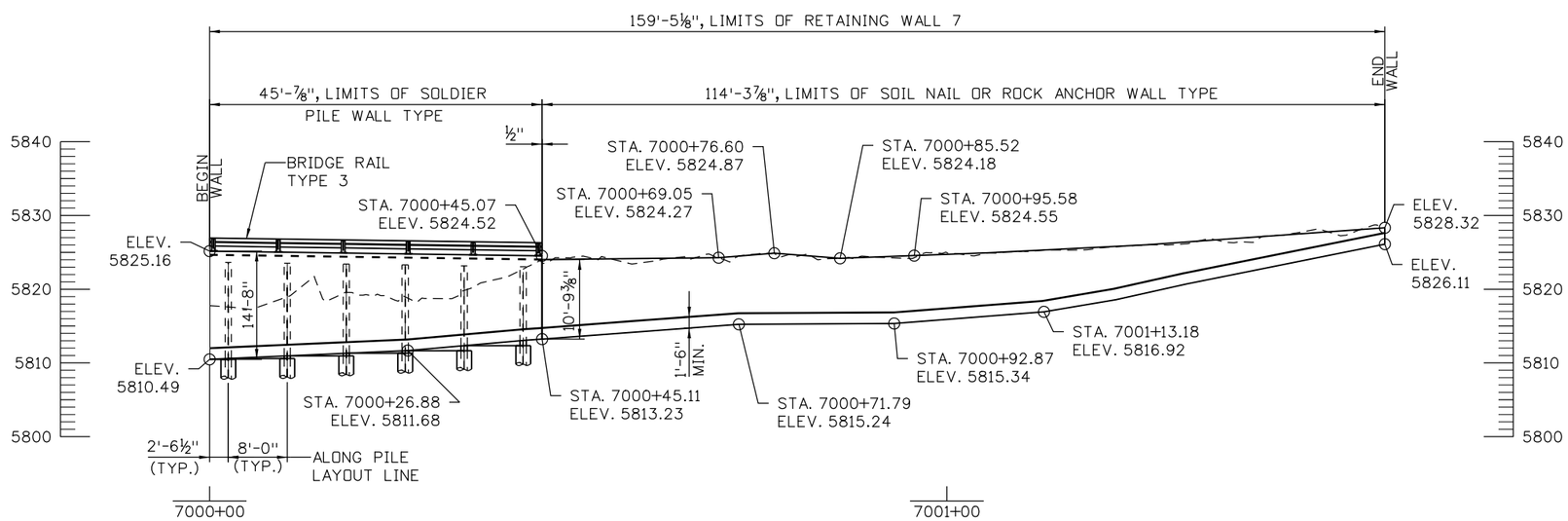

ELEVATION

TAKEN AT HCL WALL 7 / F.F. WALL

NOTES:

1. FOR GUARDRAIL INFORMATION REFER TO ROADWAY PLANS.
2. GROUND NAILS ARE GENERICALLY SHOWN. SEE GROUND NAIL LAYOUT FOR ACTUAL LOCATIONS.
3. FOR BRIDGE DETAILS, SEE BRIDGE PLANS.

10 0 10 20 FT
SCALE: 1"=20'

90% SET

CALL UTILITY NOTIFICATION CENTER OF COLORADO
811
CALL 2-BUSINESS DAYS IN ADVANCE BEFORE YOU DIG, GRADE, OR EXCAVATE FOR THE MARKING OF UNDERGROUND MEMBER UTILITIES

REVISIONS:	NO.	DATE	REVISION DESCRIPTION:

Boulder County
Michael Baker INTERNATIONAL

BOULDER COUNTY TRANSPORTATION DEPARTMENT
ENGINEERING DIVISION

DESIGNED:	CAD:	CHECKED:	DATE:
DLT	BMT		5/3/2016

WAGONWHEEL GAP ROAD WALLS
RETAINING WALL 7
GENERAL LAYOUT (1 OF 2)

PROJECT NO: 4043.SEPT12C34 | SHEET NO: 130

brett.terrell 6:15:19 PM 5/3/2016 pw:\\DCPWAPP1.bkr.mbakercorp.com:pwprod\Documents\Projects\Lakewood_Office\Boulder_County_Emergency_Transportation\T04\08_Sheet_Files\06_Structures\DGN\Walls\138200_WALL_16.dgn

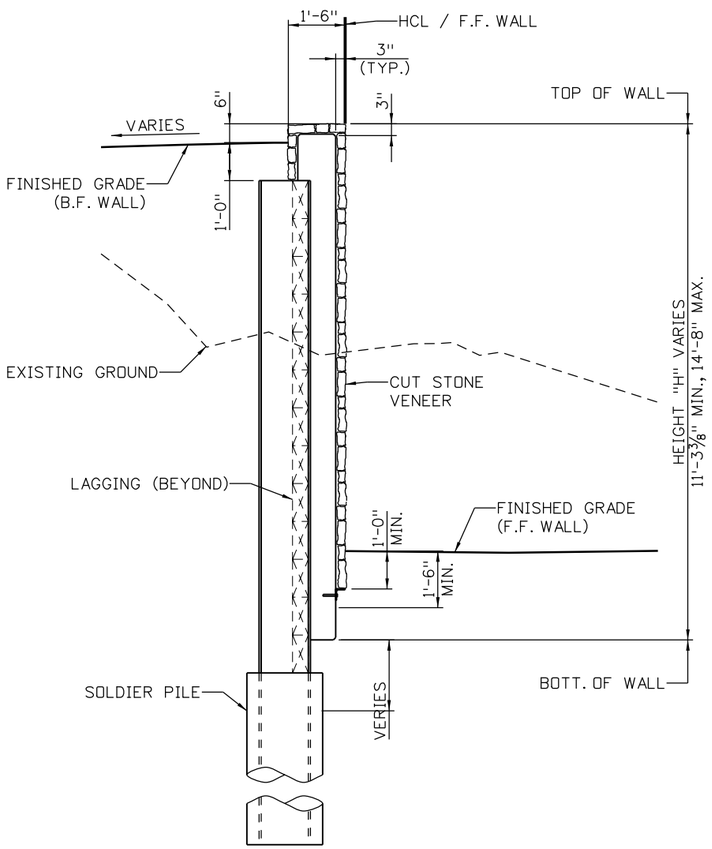

TYPICAL SECTION
LOOKING AHEAD STATION
TAKEN AT ℄ SOLDIER PILE

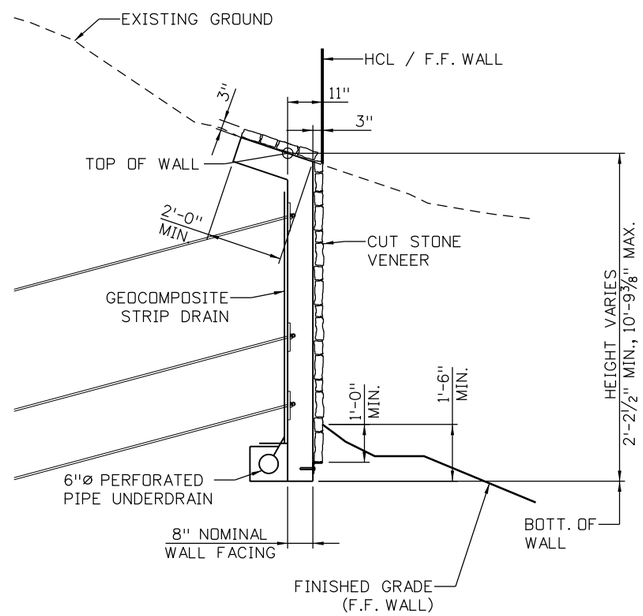

TYPICAL SECTION
LOOKING AHEAD STATION

DESIGN DATA

AASHTO LRFD BRIDGE DESIGN SPECIFICATIONS, SIXTH EDITION WITH INTERIMS THROUGH 2012

DESIGN METHOD:	LOAD AND RESISTANCE FACTOR DESIGN (LRFD)
LIVE LOAD:	HL-93 (DESIGN TRUCK OR DESIGN TANDEM, AND DESIGN LANE LOAD)
SEISMIC ZONE 1	
REINFORCED CONCRETE:	
CLASS D CONCRETE:	f'c = 4,500 PSI
REINFORCING STEEL:	fy = 60,000 PSI
SEVERITY OF SULFATE EXPOSURE:	CLASS 0
CAISSON CONCRETE:	
CLASS BZ CONCRETE:	f'c = 4,000 PSI
SEVERITY OF SULFATE EXPOSURE:	CLASS 0
STRUCTURAL STEEL:	
AASHTO M270 (ASTM A992) GRADE 50:	fy = 50,000 PSI
SOIL PROPERTIES:	
ABOVE BOTTOM OF WALL:	
SOIL UNIT WEIGHT:	120 PCF
SOIL FRICTION ANGLE:	32°
ACTIVE HORIZONTAL PRESSURE COEFFICEINT WITH LEVEL BACKSLOPE:	0.238
BELOW BOTTOM OF WALL:	
SOIL UNIT WEIGHT:	135 PCF
SOIL FRICTION ANGLE:	38°
ACTIVE HORIZONTAL PRESSURE COEFFICEINT WITH LEVEL BACKSLOPE:	0.283
PASSIVE HORIZONTAL PRESSURE COEFFICEINT WITH LEVEL FORESLOPE:	1.290

DESIGN DATA

SEISMIC ZONE 1

REINFORCED CONCRETE:	
CONCRETE CLASS SHOTCRETE :	f'c = 4,500 PSI
REINFORCING STEEL:	fy = 60,000 PSI
WELDED WIRE FABRIC:	fy = 65,000 PSI
SEVERITY OF SULFATE EXPOSURE:	CLASS 0
SOIL PROPERTIES:	
IN-SITU SOIL:	
SOIL UNIT WEIGHT:	145 PCF
SOIL COHESION:	5,000 PSF
SOIL FRICTION ANGLE:	38°

NOTES:

1. FOR ARCHITECTURAL DETAILS, REFER TO CUT STONE VENEER DETAILS SHEET.

2 0 2 4 FT
SCALE: 1"=4'

90% SET

CALL UTILITY NOTIFICATION CENTER OF COLORADO
CALL 2-BUSINESS DAYS IN ADVANCE BEFORE YOU DIG, GRADE, OR EXCAVATE FOR THE MARKING OF UNDERGROUND MEMBER UTILITIES

REVISIONS:	NO.	DATE	REVISION DESCRIPTION:

BOULDER COUNTY TRANSPORTATION DEPARTMENT
ENGINEERING DIVISION
Michael Baker INTERNATIONAL

DESIGNED:	CAD:	CHECKED:	DATE:
DLT	BMT		5/3/2016

WAGONWHEEL GAP ROAD WALLS
RETAINING WALL 7
GENERAL LAYOUT (2 OF 2)
PROJECT NO: 4043.SEPT12C34 SHEET NO: 131

brett.terrell 6:15:37 PM 5/3/2016 pw:\\DCPWAPP1bkr.mbakercorp.com:pwprod\Documents\Projects\Lakewood_Office\Boulder_County_Emergency_Transportation\T04\08_Sheet_Files\06_Structures\DGN\Walls\138200_WALL_17.dgn

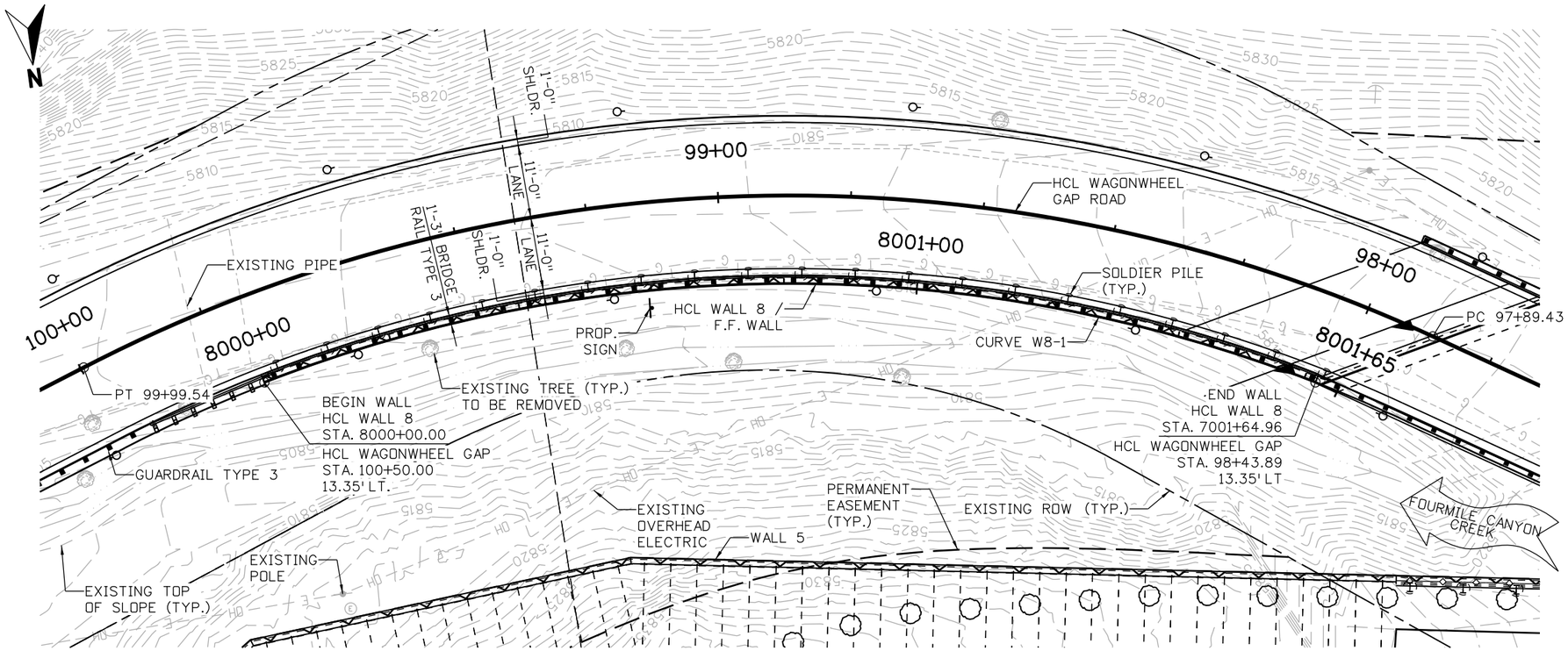

NOTES:

1. FOR GUARDRAIL INFORMATION REFER TO ROADWAY PLANS.

3. FOR BRIDGE DETAILS, SEE BRIDGE PLANS.

CURVE W8-1 DATA:

Δ = 42° 28'55" RT
R = 217.75'
L = 161.45'
T = 84.64'
PI 800+84.64
N 266709.36
E 55229.66

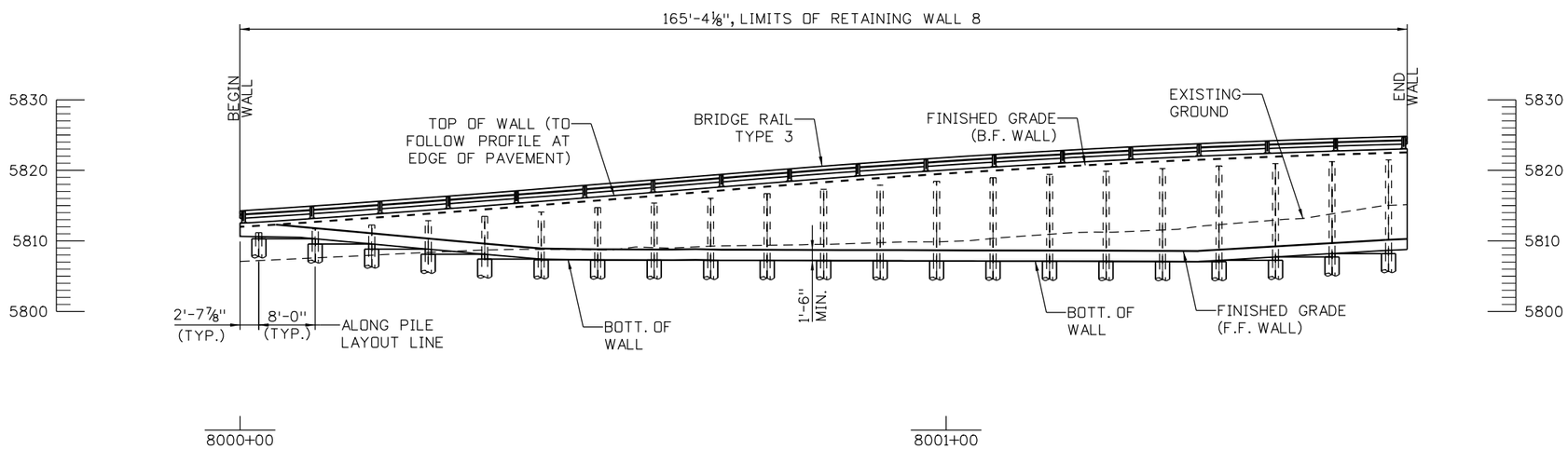

ELEVATION

TAKEN AT HCL WALL 8 / F.F. WALL

10 0 10 20 FT
SCALE: 1"=20'

90% SET

CALL UTILITY NOTIFICATION CENTER OF COLORADO
811
CALL 2-BUSINESS DAYS IN ADVANCE BEFORE YOU DIG, GRADE, OR EXCAVATE FOR THE MARKING OF UNDERGROUND MEMBER UTILITIES

REVISIONS:	NO.	DATE	REVISION DESCRIPTION:

BOULDER COUNTY TRANSPORTATION DEPARTMENT
ENGINEERING DIVISION
Boulder County
Michael Baker INTERNATIONAL

DESIGNED:	CAD:	CHECKED:	DATE:
DLT	BMT		5/3/2016

WAGONWHEEL GAP ROAD WALLS
RETAINING WALL 8
GENERAL LAYOUT (1 OF 2)

PROJECT NO: 4043.SEPT12C34 | SHEET NO: 132

brett.terrell 6:15:57 PM 5/3/2016 pw:\\DCPWAPP1.bkr.mbakercorp.com:pwprod\Documents\Projects\Lakewood_Office\Boulder_County_Emergency_Transportation\T04\08_Sheet_Files\06_Structures\DGN\Walls\138200_WALL_18.dgn

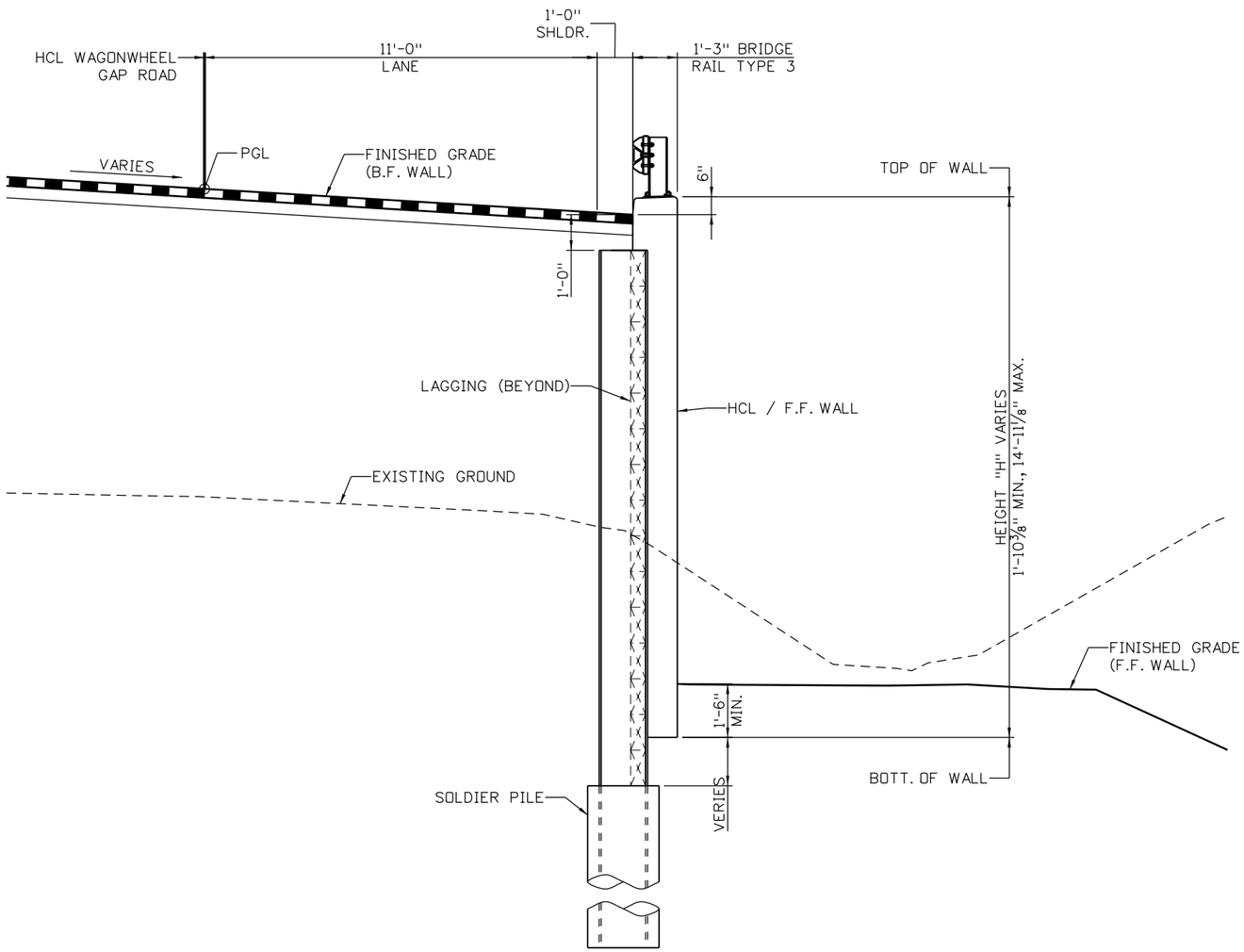

TYPICAL SECTION

LOOKING AHEAD STATION

DESIGN DATA

AASHTO LRFD BRIDGE DESIGN SPECIFICATIONS, SIXTH EDITION WITH INTERIMS THROUGH 2012

DESIGN METHOD:	LOAD AND RESISTANCE FACTOR DESIGN (LRFD)
LIVE LOAD:	HL-93 (DESIGN TRUCK OR DESIGN TANDEM, AND DESIGN LANE LOAD)
SEISMIC ZONE 1	
REINFORCED CONCRETE:	
CLASS D CONCRETE:	f'c = 4,500 PSI
REINFORCING STEEL:	fy = 60,000 PSI
SEVERITY OF SULFATE EXPOSURE:	CLASS 0
CAISSON CONCRETE:	
CLASS BZ CONCRETE:	f'c = 4,000 PSI
SEVERITY OF SULFATE EXPOSURE:	CLASS 0
STRUCTURAL STEEL:	
AASHTO M270 (ASTM A992) GRADE 50:	fy = 50,000 PSI
SOIL PROPERTIES:	
ABOVE BOTTOM OF WALL:	
SOIL UNIT WEIGHT:	120 PCF
SOIL FRICTION ANGLE:	32°
ACTIVE HORIZONTAL PRESSURE COEFFICEINT WITH LEVEL BACKSLOPE:	0.238
BELOW BOTTOM OF WALL:	
SOIL UNIT WEIGHT:	135 PCF
SOIL FRICTION ANGLE:	38°
ACTIVE HORIZONTAL PRESSURE COEFFICEINT WITH LEVEL BACKSLOPE:	0.283
PASSIVE HORIZONTAL PRESSURE COEFFICEINT WITH LEVEL FORESLOPE:	1.290

NOTES:

1. FOR BRIDGE RAIL TYPE 3 DETIALS, REFER TO BRIDGE RAIL TYPE 3 DETAILS SHEETS.

2 0 2 4 FT
SCALE: 1"=4'

90% SET

CALL UTILITY NOTIFICATION CENTER OF COLORADO
811
CALL 2-BUSINESS DAYS IN ADVANCE BEFORE YOU DIG, GRADE, OR EXCAVATE FOR THE MARKING OF UNDERGROUND MEMBER UTILITIES

REVISIONS:	NO.	DATE	REVISION DESCRIPTION:

Boulder County
Michael Baker INTERNATIONAL

BOULDER COUNTY TRANSPORTATION DEPARTMENT
ENGINEERING DIVISION

DESIGNED:	CAD:	CHECKED:	DATE:
DLT	BMT		5/3/2016

WAGONWHEEL GAP ROAD WALLS
RETAINING WALL 7
GENERAL LAYOUT (2 OF 2)

PROJECT NO: 4043.SEPT12C34 SHEET NO: 133

brett.terrell 6:16:16 PM 5/3/2016 pw:\\DCPWAPP1.bkr.mbakercorp.com:pwprod\Documents\Projects\Lakewood_Office\Boulder_County_Emergency_Transportation\T04\08_Sheet_Files\06_Structures\DGN\Walls\138200_WALL_19.dgn

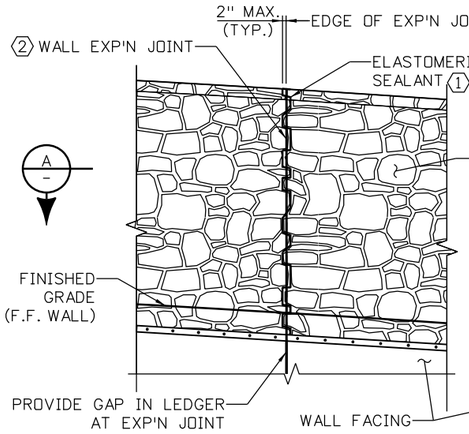

AT EXPANSION JOINT

SEE GENERAL LAYOUT FOR LOCATION

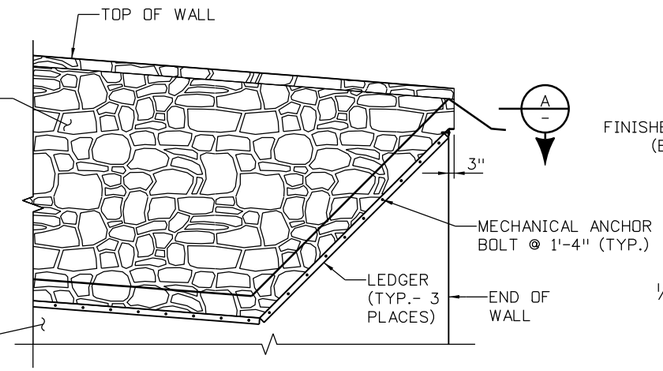

AT END OF WALL

TYPICAL ELEVATION

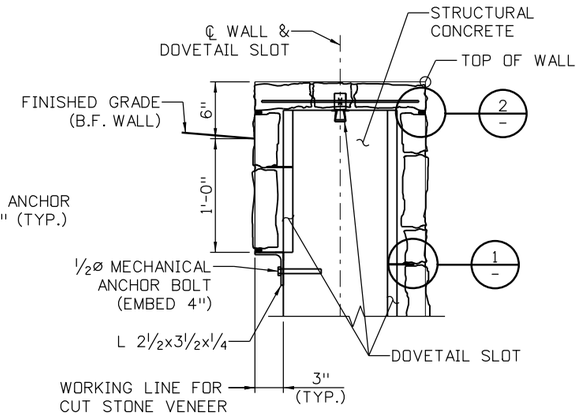

CUT STONE VENEER TYPICAL SECTION

WALL 1 VENEER LIMITS DO NOT EXTEND TO B.F. WALL

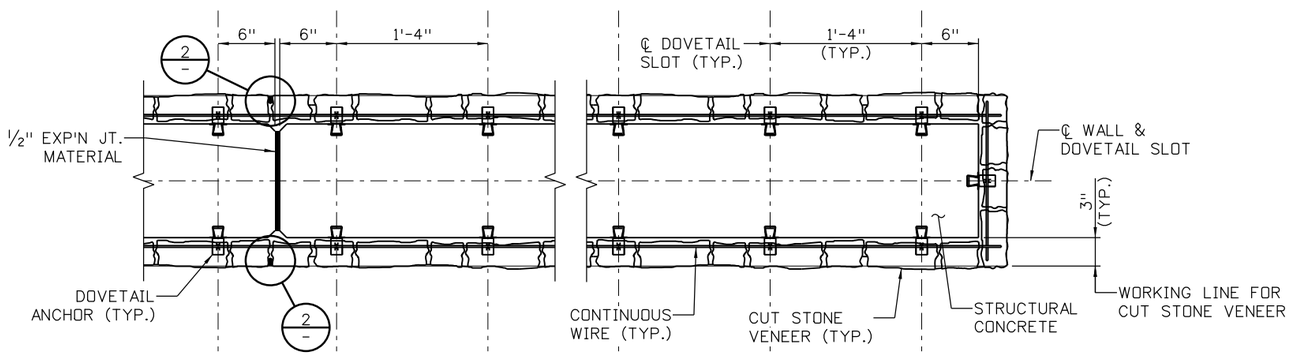

SECTION A

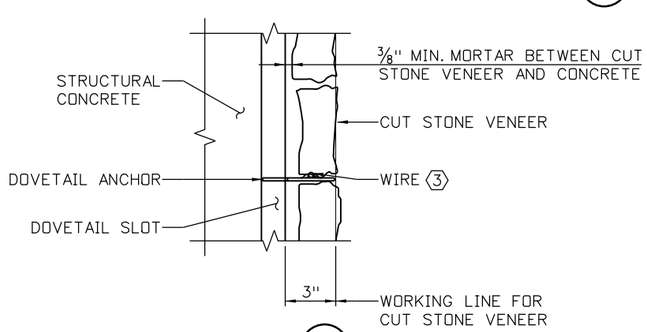

DETAIL 1

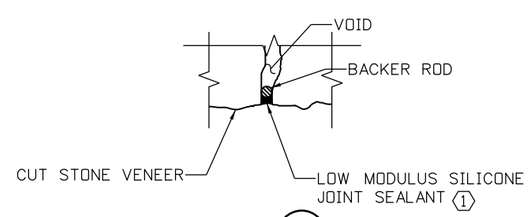

DETAIL 2

NOTES:

1. CUT STONE VENEER SHALL BE DAKOTA TOP ROCK AS SUPPLIED BY ELDORADO STONE OR APPROVED EQUAL AND PLACED A RANDOM PATTERN.
2. DOVETAIL SLOTS SHALL BE TYPE 305 AS MANUFACTURED BY HOHMANN & BARNARD, INC., OR APPROVED EQUAL. THEY SHALL BE 22 GAGE HOT-DIPPED GALVANIZED STEEL, AND HAVE A THROAT OPENING WIDTH OF ⅝".
3. THE DOVETAIL ANCHORS SHALL BE 303 SV - SEISMIC-NOTCH AS MANUFACTURED BY HOHMANN & BARNARD, INC., OR AN APPROVED EQUAL. MATERIAL FOR DOVETAIL ANCHORS SHALL BE 3/32" THICK HOT-DIPPED GALVANIZED STEEL.
4. WIRE SHALL BE 9 GAGE PLAIN COLD-DRAWN STEEL WIRE CONFORMING TO ASTM A82. WIRE SHALL BE MILL GALVANIZED CONFORMING TO ASTM A153.
5. CONCRETE SURFACES SHALL BE PREPARED IN ACCORDANCE WITH SUPPLIER'S RECOMMENDATION PRIOR TO INSTALLATION OF CUT STONE VENEER.
6. MORTAR JOINTS SHALL BE ½" MAXIMUM THICKNESS UNLESS SHOWN OTHERWISE.
7. ALL WORK NECESSARY FOR THE INSTALLATION OF CUT STONE VENEER, INCLUDING SURFACE PREPARATION, DOVETAIL SLOTS, WIRE TIES, STONE, CAP STONE, MORTAR AND MISC. HARDWARE, SHALL BE INCLUDED IN ITEM 601 CUT STONE VENEER.
8. CUT STONE VENEER SHALL BE ANCHORED TO THE WALL CONCRETE BY MEANS OF WIRE TIES PLACED IN DOVETAIL SLOTS, AS SHOWN. ALTERNATIVE METHODS OF ANCHORING THE STONE VENEER MAY BE SUBMITTED TO THE ENGINEER FOR APPROVAL.
9. REINFORCING STEEL IN STRUCTURAL CONCRETE NOT SHOWN.
10. VENEER LIMITS EXTEND TO 1'-0" MINIMUM BELOW FINISHED GRADE ON ALL EXPOSED CONCRETE SURFACES.

KEYNOTES:

1. TOOL SEALANT TO A ROUNDED SURFACE AND THE REQUIRED DIMENSIONS SHOWN. COLOR TO MATCH MORTAR JOINTS.
2. VENEER PATTERN SHALL NOT BE BROKEN WITH A VERTICAL JOINT AT WALL EXPANSION JOINT. PROVIDE EXPANSION JOINT IN VENEER FOLLOWING GROUT LINE AS SHOWN.
3. FIELD BEND WIRE SO THAT TAILS ARE EMBEDDED IN THE MIDDLE OF MORTAR BED. 1" MIN. CLR. FROM STRUCTURAL CONCRETE.

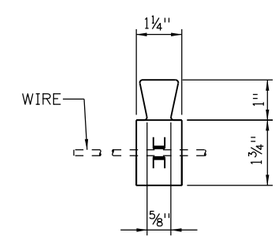

DOVETAIL ANCHOR AND WIRE

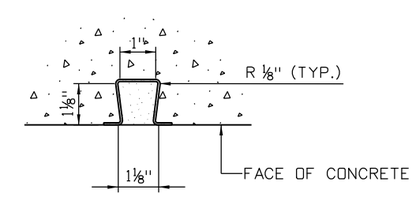

DOVETAIL SLOT

ANCHORAGE DETAIL

PLAN VIEW

90% SET

CALL UTILITY NOTIFICATION CENTER OF COLORADO
811
CALL 2-BUSINESS DAYS IN ADVANCE BEFORE YOU DIG, GRADE, OR EXCAVATE FOR THE MARKING OF UNDERGROUND MEMBER UTILITIES

REVISIONS:	NO.	DATE	REVISION DESCRIPTION:

BOULDER COUNTY TRANSPORTATION DEPARTMENT
ENGINEERING DIVISION
Boulder County
Michael Baker INTERNATIONAL

DESIGNED:	CAD:	CHECKED:	DATE:
DLT	BMT		5/3/2016

WAGONWHEEL GAP ROAD WALLS
CUT STONE VENEER DETAILS

PROJECT NO: 4043.SEPT12C34 | SHEET NO: 134

brett.terrell 6:16:34 PM 5/3/2016 pw:\\DCPWAPP1.bkr.mbakercorp.com:pwprod\Documents\Projects\Lakewood_Office\Boulder_County_Emergency_Transportation\T04\08_Sheet_Files\06_Structures\DGN\Walls\138200_WALL_20.dgn

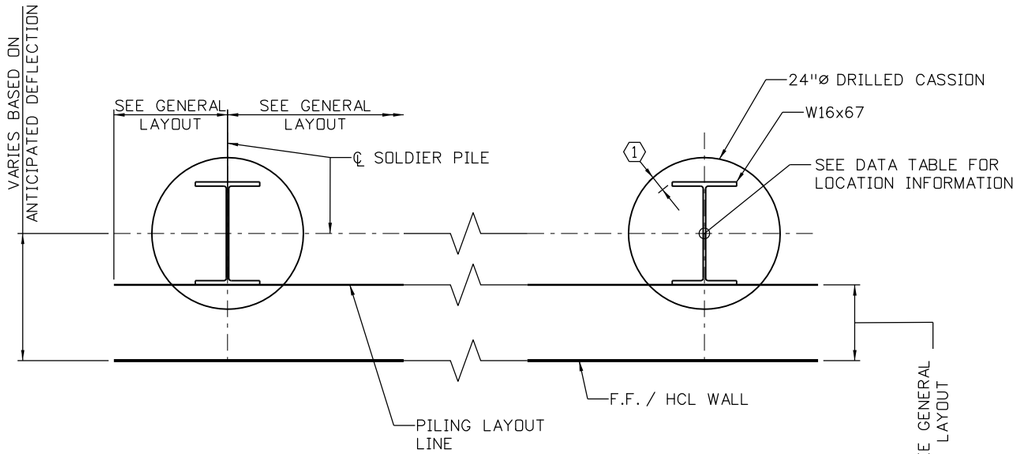

FOUNDATION LAYOUT - PLAN

NOTES

1. ORIENT ℄ PILING WEB PERPENDICULAR TO F.F. WALL AS SHOWN.
2. TEMPORARY CASING MAY BE REQUIRED TO PREVENT CAVING OF GRANULAR SOILS AND/OR TO REDUCE TO INTRUSION OF GROUND WATER. TEMPORARY CASING AND DEWATERING SHALL BE INCLUDED IN ITEM 503 DRILLED CAISSON.
3. DRILLED CAISSON CONCRETE SHALL BE CONCRETE CLASS BZ.

KEYNOTES

(1) 1½" MINIMUM CLEAR.

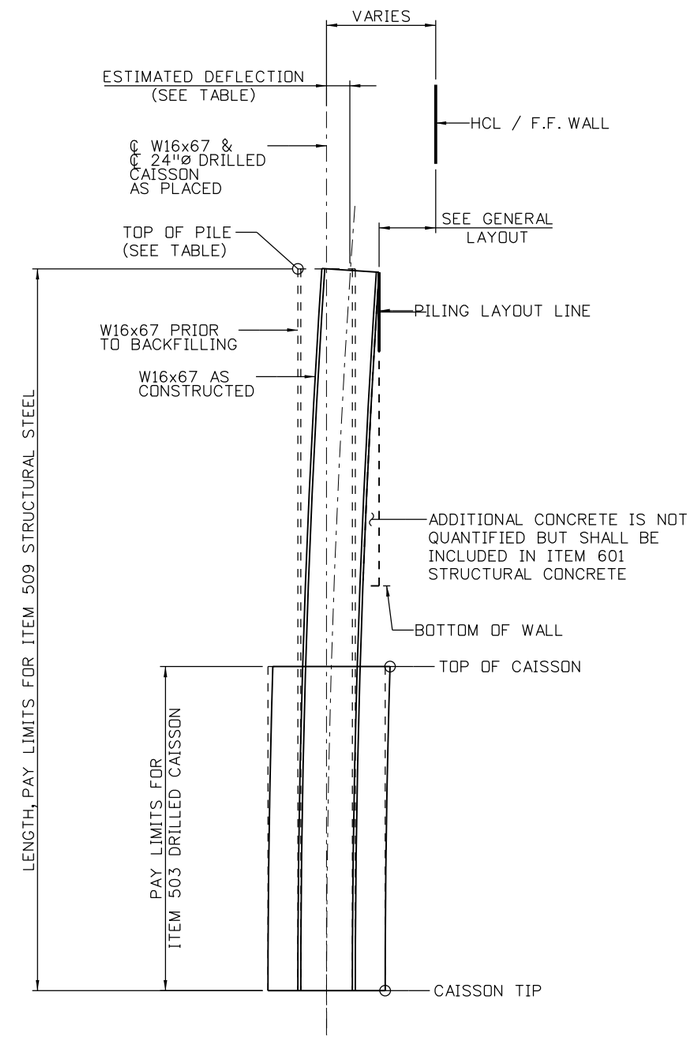

SOLDIER PILE DETAIL

N.T.S.

90% SET

CALL UTILITY NOTIFICATION CENTER OF COLORADO
811
CALL 2-BUSINESS DAYS IN ADVANCE BEFORE YOU DIG, GRADE, OR EXCAVATE FOR THE MARKING OF UNDERGROUND MEMBER UTILITIES

REVISIONS: NO.	DATE	REVISION DESCRIPTION:

Boulder County

Michael Baker INTERNATIONAL

BOULDER COUNTY TRANSPORTATION DEPARTMENT
ENGINEERING DIVISION

DESIGNED:	CAD:	CHECKED:	DATE:
DLT	BMT		5/3/2016

WAGONWHEEL GAP ROAD WALLS
SOLDIER PILE WALL DETAILS (1 OF 3)

PROJECT NO: 4043.SEPT12C34 | SHEET NO: 135

brett.terrell 6:16:53 PM 5/3/2016 pw:\\DCPWAPP1.bkr.mbakercorp.com:pwprod\Documents\Projects\Lakewood_Office\Boulder_County_Emergency_Transportation\T04\08_Sheet_Files\06_Structures\DGN\Walls\138200_WALL_21.dgn

WALL 5 SOLDIER PILE DATA TABLE

DRILLED CAISSON NUMBER	NORTHING	EASTING	WALL HCL		GOLD RUN RD. HCL		ESTIMATED TOP OF WALL DEFLECTION ⟨1⟩	EST. ℄ CAISSON PLACEMENT OFFSET FROM WALL HCL	EXISITNG GROUND ELEVATION AT ℄ CAISSON	TOP OF WALL ELEVATION	BOTTOM OF WALL ELEVATION	WALL HEIGHT ("H")	PILE CUTOFF ELEVATION	TOP OF CAISSON ELEVATION	MIN. CAISSON LENGTH	CAISSON MIN. TIP ELEVATION
			STATION AT ℄ CAISSON	PLAN OFFSET AT ℄ CAISSON	STATION AT ℄ CAISSON	PLAN OFFSET AT ℄ CAISSON										
DC 1	263,365.11	34,786.95	2000+02.13	1.60 FT. LT.	70+47.19	10.90 FT. LT.	0.03 FT	1.63 FT. LT.	6893.25	6895.06	6888.32	6.74 FT.	6893.56	6887.63	14.00 FT.	6873.63
DC 2	263,362.99	34,794.70	2000+10.08	1.60 FT. LT.	70+55.82	10.90 FT. LT.	0.03 FT	1.63 FT. LT.	6891.86	6894.48	6887.63	6.85 FT.	6892.98	6886.94	14.00 FT.	6872.94
DC 3	263,360.46	34,802.32	2000+18.03	1.60 FT. LT.	70+64.44	10.90 FT. LT.	0.03 FT	1.63 FT. LT.	6891.25	6893.93	6886.94	6.99 FT.	6892.43	6886.25	14.00 FT.	6872.25
DC 4	263,357.52	34,809.80	2000+25.98	1.60 FT. LT.	70+73.07	10.90 FT. LT.	0.04 FT	1.63 FT. LT.	6890.82	6893.41	6886.25	7.16 FT.	6891.91	6885.56	14.00 FT.	6871.56
DC 5	263,354.18	34,817.11	2000+33.93	1.60 FT. LT.	70+81.69	10.90 FT. LT.	0.04 FT	1.63 FT. LT.	6890.53	6892.91	6885.56	7.35 FT.	6891.41	6884.86	14.00 FT.	6870.86
DC 6	263,350.46	34,824.23	2000+41.89	1.60 FT. LT.	70+90.16	10.90 FT. LT.	0.04 FT	1.63 FT. LT.	6889.96	6892.43	6884.86	7.57 FT.	6890.93	6884.17	14.00 FT.	6870.17
DC 7	263,346.65	34,831.26	2000+49.89	1.60 FT. LT.	70+98.16	10.90 FT. LT.	0.04 FT	1.64 FT. LT.	6889.94	6892.00	6884.17	7.83 FT.	6890.50	6883.48	14.00 FT.	6869.48
DC 8	263,342.84	34,838.30	2000+57.90	1.60 FT. LT.	71+06.16	10.90 FT. LT.	0.04 FT	1.64 FT. LT.	6890.11	6891.60	6883.48	8.13 FT.	6890.10	6882.78	14.00 FT.	6868.78
DC 9	263,338.66	34,845.19	2000+65.80	1.60 FT. LT.	71+15.34	10.90 FT. LT.	0.04 FT	1.64 FT. LT.	6890.82	6891.10	6882.78	8.32 FT.	6889.60	6882.61	14.00 FT.	6868.61

WALL 6 SOLDIER PILE DATA TABLE

DRILLED CAISSON NUMBER	NORTHING	EASTING	WALL HCL		GOLD RUN RD. HCL		ESTIMATED TOP OF WALL DEFLECTION ⟨1⟩	EST. ℄ CAISSON PLACEMENT OFFSET FROM WALL HCL	EXISITNG GROUND ELEVATION AT ℄ CAISSON	TOP OF WALL ELEVATION	BOTTOM OF WALL ELEVATION	WALL HEIGHT ("H")	PILE CUTOFF ELEVATION	TOP OF CAISSON ELEVATION	MIN. CAISSON LENGTH	CAISSON MIN. TIP ELEVATION
			STATION AT ℄ CAISSON	PLAN OFFSET AT ℄ CAISSON	STATION AT ℄ CAISSON	PLAN OFFSET AT ℄ CAISSON										
DC 1	263,796.30	53,662.78	3000+02.12	1.60 FT. LT.	71+76.16	10.90 FT. LT.	0.04 FT	1.64 FT. LT.	6886.57	6888.62	6880.23	8.39 FT.	6887.12	6880.23	14.00 FT.	6866.23
DC 2	263,790.47	53,657.32	3000+10.05	1.60 FT. LT.	71+85.16	10.90 FT. LT.	0.04 FT	1.64 FT. LT.	6885.62	6888.16	6880.23	7.93 FT.	6886.66	6880.23	14.00 FT.	6866.23
DC 3	263,784.54	53,651.97	3000+18.05	1.60 FT. LT.	71+93.16	10.90 FT. LT.	0.04 FT	1.63 FT. LT.	6886.21	6887.57	6880.23	7.34 FT.	6886.07	6880.23	14.00 FT.	6866.23
DC 4	263,778.52	53,646.72	3000+26.05	1.60 FT. LT.	72+01.16	10.90 FT. LT.	0.03 FT	1.63 FT. LT.	6885.74	6886.98	6880.23	6.75 FT.	6885.48	6880.23	14.00 FT.	6866.23

WALL 7 SOLDIER PILE DATA TABLE

DRILLED CAISSON NUMBER	NORTHING	EASTING	WALL HCL		GOLD RUN RD. HCL		ESTIMATED TOP OF WALL DEFLECTION ⟨1⟩	EST. ℄ CAISSON PLACEMENT OFFSET FROM WALL HCL	EXISITNG GROUND ELEVATION AT ℄ CAISSON	TOP OF WALL ELEVATION	BOTTOM OF WALL ELEVATION	WALL HEIGHT ("H")	PILE CUTOFF ELEVATION	TOP OF CAISSON ELEVATION	MIN. CAISSON LENGTH	CAISSON MIN. TIP ELEVATION
			STATION AT ℄ CAISSON	PLAN OFFSET AT ℄ CAISSON	STATION AT ℄ CAISSON	PLAN OFFSET AT ℄ CAISSON										
DC 1	262,234.49	35,901.69	4000+02.83	1.60 FT. LT.	87+90.39	16.07 FT. LT.	0.07 FT	1.66 FT. LT.	6743.73	6745.15	6731.63	13.52 FT.	6743.65	6731.11	16.50 FT.	6714.61
DC 2	262,228.54	35,907.03	4000+10.83	1.60 FT. LT.	87+98.39	16.07 FT. LT.	0.07 FT	1.66 FT. LT.	6742.03	6744.71	6731.11	13.60 FT.	6743.21	6730.60	16.50 FT.	6714.10
DC 3	262,222.59	35,912.38	4000+18.83	1.60 FT. LT.	88+06.39	16.07 FT. LT.	0.07 FT	1.66 FT. LT.	6740.54	6744.28	6730.60	13.68 FT.	6742.78	6730.09	16.50 FT.	6713.59
DC 4	262,216.63	35,917.72	4000+26.83	1.60 FT. LT.	88+14.39	16.07 FT. LT.	0.07 FT	1.66 FT. LT.	6740.17	6743.83	6730.09	13.74 FT.	6742.33	6729.57	16.50 FT.	6713.07
DC 5	262,210.68	35,923.07	4000+34.83	1.60 FT. LT.	88+22.39	16.07 FT. LT.	0.07 FT	1.66 FT. LT.	6739.46	6743.37	6729.57	13.80 FT.	6741.87	6729.19	16.50 FT.	6712.69
DC 6	262,206.22	35,927.08	4000+40.83	1.60 FT. LT.	88+28.39	16.07 FT. LT.	0.07 FT	1.67 FT. LT.	6739.40	6743.03	6729.19	13.84 FT.	6741.53	6728.67	16.50 FT.	6712.17
DC 7	262,200.32	35,932.47	4000+48.85	1.60 FT. LT.	88+36.03	16.07 FT. LT.	0.07 FT	1.67 FT. LT.	6738.36	6742.58	6728.67	13.90 FT.	6741.08	6728.16	16.50 FT.	6711.66
DC 8	262,194.57	35,938.00	4000+56.87	1.60 FT. LT.	88+43.62	16.07 FT. LT.	0.07 FT	1.67 FT. LT.	6736.53	6742.10	6728.16	13.94 FT.	6740.60	6727.65	16.50 FT.	6711.15
DC 9	262,188.95	35,943.67	4000+64.89	1.60 FT. LT.	88+51.21	16.07 FT. LT.	0.07 FT	1.67 FT. LT.	6735.54	6741.57	6727.65	13.93 FT.	6740.07	6727.13	16.50 FT.	6710.63
DC 10	262,183.47	35,949.47	4000+72.92	1.60 FT. LT.	88+58.80	16.07 FT. LT.	0.07 FT	1.67 FT. LT.	6734.82	6741.04	6727.13	13.91 FT.	6739.54	6726.62	16.50 FT.	6710.12
DC 11	262,178.13	35,955.41	4000+80.94	1.60 FT. LT.	88+66.39	16.07 FT. LT.	0.07 FT	1.67 FT. LT.	6734.36	6740.50	6726.62	13.88 FT.	6739.00	6726.11	16.50 FT.	6709.61
DC 12	262,172.94	35,961.48	4000+88.96	1.60 FT. LT.	88+73.98	16.07 FT. LT.	0.07 FT	1.67 FT. LT.	6734.40	6739.95	6726.11	13.84 FT.	6738.45	6725.59	16.50 FT.	6709.09
DC 13	262,167.90	35,967.67	4000+96.98	1.60 FT. LT.	88+81.57	16.07 FT. LT.	0.07 FT	1.66 FT. LT.	6733.35	6739.38	6725.59	13.79 FT.	6737.88	6725.08	16.50 FT.	6708.58
DC 14	262,163.02	35,973.98	4001+05.01	1.60 FT. LT.	88+89.16	16.07 FT. LT.	0.07 FT	1.66 FT. LT.	6733.17	6738.77	6725.08	13.69 FT.	6737.27	6724.57	16.50 FT.	6708.07
DC 15	262,158.28	35,980.41	4001+13.02	1.60 FT. LT.	88+96.88	16.07 FT. LT.	0.07 FT	1.66 FT. LT.	6733.19	6738.14	6724.57	13.57 FT.	6736.64	6724.38	16.50 FT.	6707.88

KEYNOTES:

⟨1⟩ ESTIMATED DEFLECTION = 0.5% "H". ESTIMATED DEFLECTIONS ARE APPROXIMATE AND MAY VARY DEPENDING ON BACKFILL EQUIPMENT AND PROCEDURE.

90% SET

CALL UTILITY NOTIFICATION CENTER OF COLORADO
811
CALL 2-BUSINESS DAYS IN ADVANCE BEFORE YOU DIG, GRADE, OR EXCAVATE FOR THE MARKING OF UNDERGROUND MEMBER UTILITIES

REVISIONS: NO.	DATE	REVISION DESCRIPTION:

Boulder County

Michael Baker INTERNATIONAL

BOULDER COUNTY TRANSPORTATION DEPARTMENT
ENGINEERING DIVISION

DESIGNED:	CAD:	CHECKED:	DATE:
DLT	BMT		5/3/2016

WAGONWHEEL GAP ROAD WALLS
SOLDIER PILE WALL DETAILS (2 OF 3)

PROJECT NO: 4043.SEPT12C38 | SHEET NO: 136

brett.terrell 6:17:10 PM 5/3/2016 pw:\\DCPWAPP1.bkr.mbakercorp.com:pwprod\Documents\Projects\Lakewood_Office\Boulder_County_Emergency_Transportation\T04\08_Sheet_Files\06_Structures\DGN\Walls\138200_WALL_22.dgn

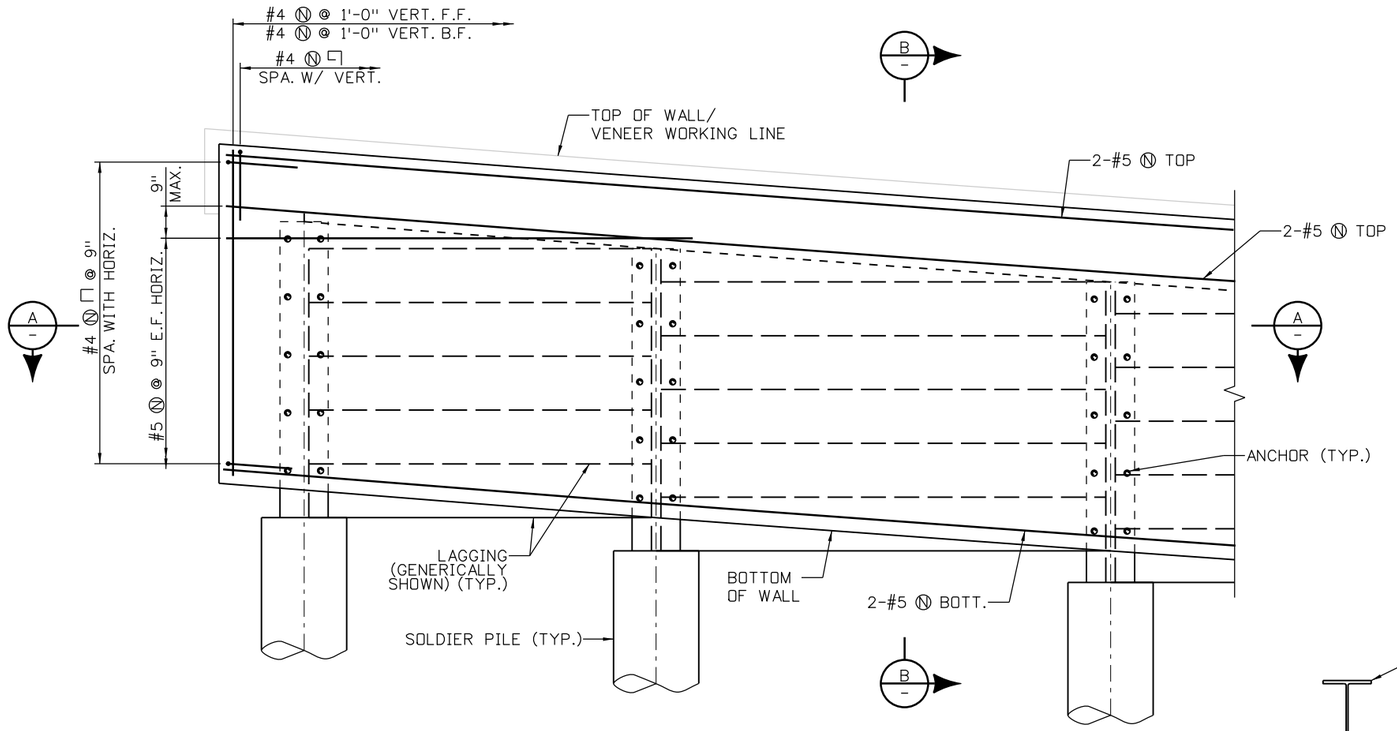

TYPICAL PARTIAL ELEVATION
DRAINAGE NOT SHOWN

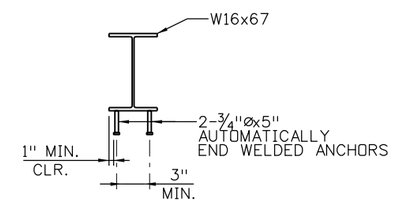

DETAIL 1/–

NOTES

1. FACING CONCRETE SHALL BE CONCRETE CLASS D (WALL).
2. WEEP HOLES SHALL BE 3 INCH DIAMETER SCHEDULE 40 PVC PIPE POSITIONED 6 INCHES CLEAR ABOVE FINSIHED GRADE (F.F. WALL). PROVIDE 1 INCH CLEAR TO REINFORCING.
3. GEOCOMPOSITE SHALL BE SECURED TO PREVENT MOVEMENT DURING OPERATIONS.
4. ALL ELEMENTS ASSOCIATED WITH LAGGING, GEOCOMPOSITE DRAIN, AND WEEP HOLES SHALL BE INCLUDED IN ITEM 601 CONCRETE CLASS D (WALL).
5. THE CONCTRACTOR SHALL DESIGN LAGGING TO SPAN BETWEEN SOLDIER PILES. THE CONTRACTOR SHALL SUBMIT DESIGN CALCULATIONS AND WORKING DRAWINGS SEALED BY THE CONTRACTOR'S ENGINEER FOR INFORMATION ONLY 10 DAYS BEFORE THE START OF WORK.
6. FOR ARCHITECTURAL DETAILS AND ASSOCIATED EMBEDDED ELEMENTS, REFER TO CUT STONE VENEER SHEETS.
7. F.F. WALL SHALL BE PLUMB. SEE SOLDIER PILE DETAIL FOR ADDITIONAL CONCRETE QUANITITIES NOT SHOWN.

KEYNOTES

(1) DRAINAGE NOT REQUIRED WHERE WALL HEIGHT "H" IS LESS THAN 6'-0".

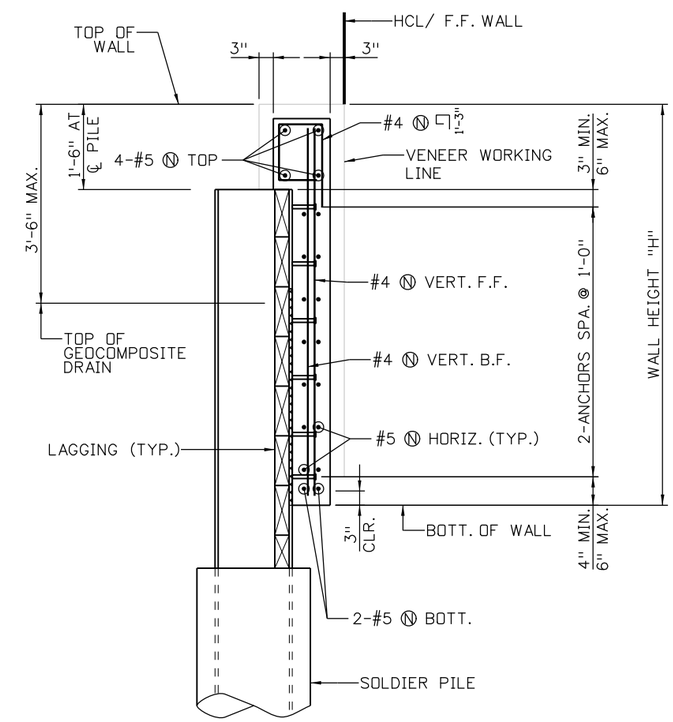

TYPICAL SECTION B/–
WEEP HOLES NOT SHOWN

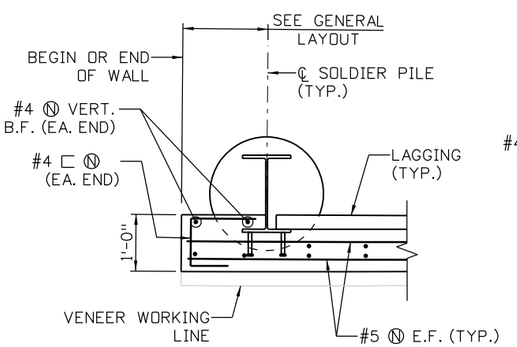

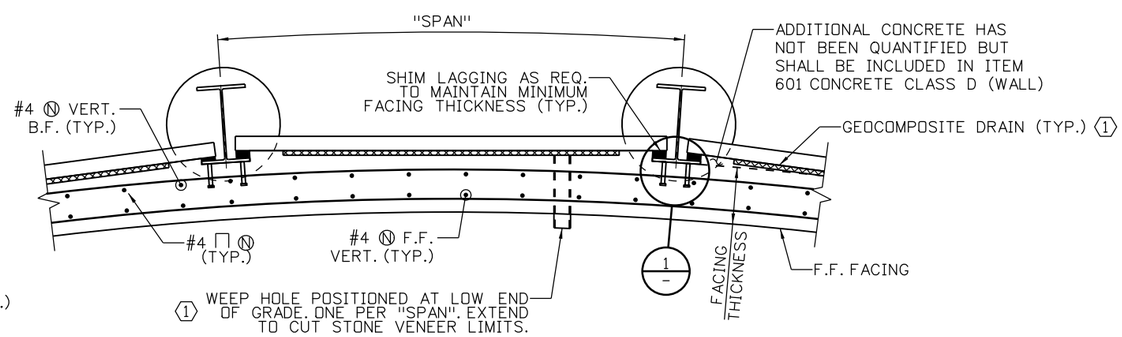

SECTION A/–

90% SET

CALL UTILITY NOTIFICATION CENTER OF COLORADO
811
CALL 2-BUSINESS DAYS IN ADVANCE BEFORE YOU DIG, GRADE, OR EXCAVATE FOR THE MARKING OF UNDERGROUND MEMBER UTILITIES

REVISIONS:	NO.	DATE	REVISION DESCRIPTION:

Boulder County
Michael Baker INTERNATIONAL

BOULDER COUNTY TRANSPORTATION DEPARTMENT
ENGINEERING DIVISION

DESIGNED:	CAD:	CHECKED:	DATE:
DLT	BMT		5/3/2016

WAGONWHEEL GAP ROAD WALLS
SOLDIER PILE WALL DETAILS (3 OF 3)

PROJECT NO: 4043.SEPT12C34 | SHEET NO: 137

brett.terrell 6:18:24 PM 5/3/2016 pw:\\DCPWAPP1.bkr.mbakercorp.com:pwprod\Documents\Projects\Lakewood_Office\Boulder_County_Emergency_Transportation\TOA\08_Sheet_Files\06_Structures\DGN\Walls\138200_WALL_23.dgn

NOTES:

1. THIS SHEET GIVES THE MINIMUM EXTENT OF EARTHWORK. THE CONTRACTOR MAY ELECT TO EXTEND THE STRUCTURE EXCAVATION AND STRUCTURE BACKFILL BEYOND THE LIMITS SHOWN. ANY ADDITIONAL EXCAVATION BEHIND THE WALL SHALL BE BACKFILLED WITH STRUCTURE BACKFILL (CLASS 1). ANY ADDITIONAL EXCAVATION IN FRONT OF THE WALL SHALL BE BACKFILLED WITH STRUCTURE BACKFILL (CLASS 2). ANY ADDITIONAL EXCAVATION OR BACKFILL BEYOND THE LIMITS SHOWN ON THIS SHEET WILL BE BOURNE BY THE CONTRACTOR AND WILL NOT BE MEASURED OR PAID FOR.
2. EXCAVATION AND BACKFILL IN THE DRILLED HOLE OF THE CAISSON SHALL NOT BE PAID FOR SEPERATELY BUT INCLUDED IN ITEM 503 DRILLED CAISSON.
3. FOR DRAINAGE DETAILS, SEE SOLDIER PILE WALL DETAILS.

KEYNOTES:

(1) DIMENSION SHOWN IS USED FOR QUANTITY PURPOSES ONLY AND APPLIES FROM BEGINNING TO END OF WALL.

LEGEND:

- PAY LIMITS OF STRUCTURE EXCAVATION
- LIMITS OF STRUCTURE BACKFILL (CLASS 2)
- SEE ROADWAY PLANS
- LIMITS OF UNCLASSIFIED EXCAVATION (INCLUDED WITH ROADWAY PLANS)
- CONCRETE
- EARTH

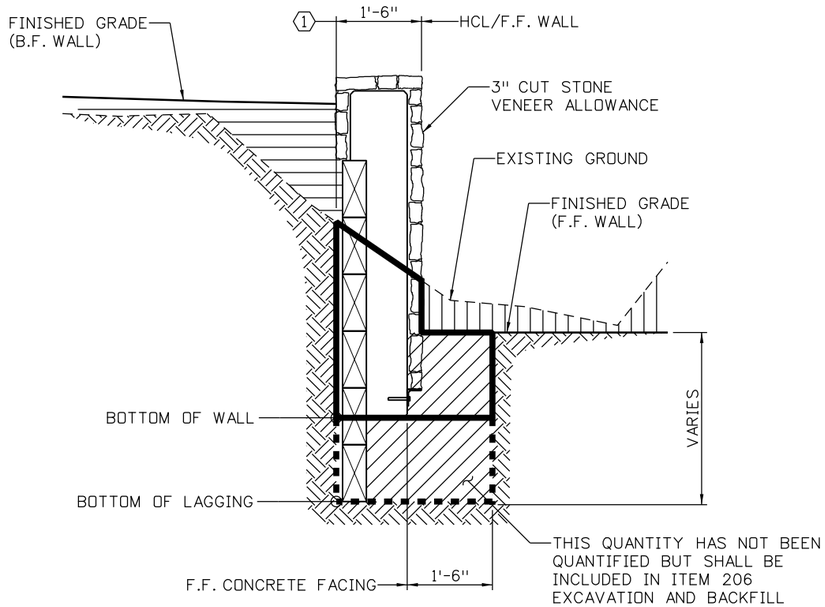

TYPICAL SECTION BETWEEN CAISSONS

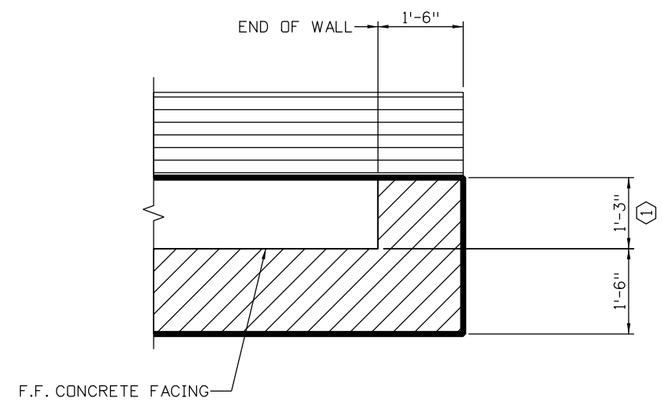

END OF RETAINING WALL DETAIL - PLAN

90% SET

CALL UTILITY NOTIFICATION CENTER OF COLORADO
811
CALL 2-BUSINESS DAYS IN ADVANCE BEFORE YOU DIG, GRADE, OR EXCAVATE FOR THE MARKING OF UNDERGROUND MEMBER UTILITIES

REVISIONS:	NO.	DATE	REVISION DESCRIPTION:

Boulder County

Michael Baker INTERNATIONAL

BOULDER COUNTY TRANSPORTATION DEPARTMENT
ENGINEERING DIVISION

DESIGNED:	CAD:	CHECKED:	DATE:
DLT	BMT		5/3/2016

WAGONWHEEL GAP ROAD WALLS
SOLDIER PILE WALL EXCAVATION AND BACKFILL

PROJECT NO: 4043.SEPT12C38 | SHEET NO: 138

brett.terrell 6:18:42 PM 5/3/2016 pw:\\DCPWAPP1.bkr.mbakercorp.com:pwprod\Documents\Projects\Lakewood_Office\Boulder_County_Emergency_Transportation\T04\08_Sheet_Files\06_Structures\DGN\Walls\138200_WALL_24.dgn

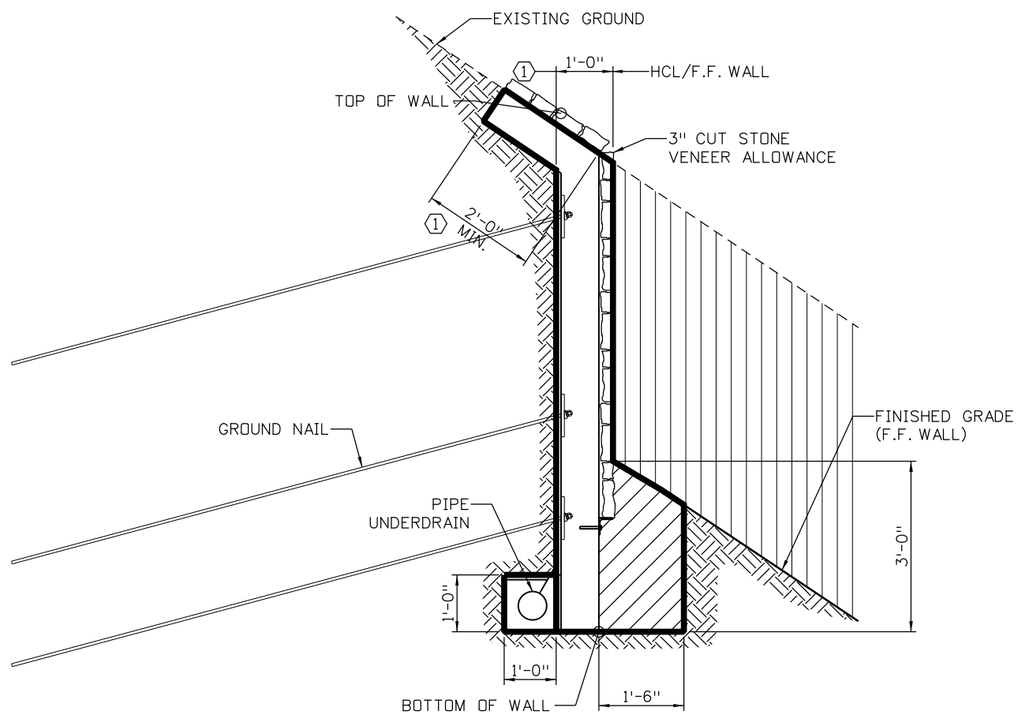

TYPICAL SECTION

NOTES:

1. THIS SHEET GIVES THE MINIMUM EXTENT OF EARTHWORK. THE CONTRACTOR MAY ELECT TO EXTEND THE STRUCTURE EXCAVATION AND STRUCTURE BACKFILL BEYOND THE LIMITS SHOWN. ANY ADDITIONAL EXCAVATION BEHIND THE WALL SHALL BE BACKFILLED WITH STRUCTURE BACKFILL (CLASS 1). ANY ADDITIONAL EXCAVATION IN FRONT OF THE WALL SHALL BE BACKFILLED WITH STRUCTURE BACKFILL (CLASS 2). ANY ADDITIONAL EXCAVATION OR BACKFILL BEYOND THE LIMITS SHOWN ON THIS SHEET WILL BE BOURNE BY THE CONTRACTOR AND WILL NOT BE MEASURED OR PAID FOR.

2. FOR DRAINAGE DETAILS, SEE SOIL NAIL WALL DETAILS.

KEYNOTES:

1. DIMENSION SHOWN IS USED FOR QUANTITY PURPOSES ONLY AND APPLIES FROM BEGINNING TO END OF WALL.

LEGEND:

- PAY LIMITS OF STRUCTURE EXCAVATION
- LIMITS OF STRUCTURE BACKFILL (CLASS 2)
- SEE ROADWAY PLANS
- LIMITS OF UNCLASSIFIED EXCAVATION (INCLUDED WITH ROADWAY PLANS)
- CONCRETE
- EARTH

90% SET

CALL UTILITY NOTIFICATION CENTER OF COLORADO
811
CALL 2-BUSINESS DAYS IN ADVANCE BEFORE YOU DIG, GRADE, OR EXCAVATE FOR THE MARKING OF UNDERGROUND MEMBER UTILITIES

REVISIONS:	NO.	DATE	REVISION DESCRIPTION:

Boulder County

Michael Baker INTERNATIONAL

BOULDER COUNTY TRANSPORTATION DEPARTMENT
ENGINEERING DIVISION

DESIGNED:	CAD:	CHECKED:	DATE:
DLT	BMT		5/3/2016

WAGONWHEEL GAP ROAD WALLS
SOIL NAIL WALL
EXCAVATION AND BACKFILL

PROJECT NO: 4043.SEPT12C38 | SHEET NO: 139

brett.terrell 6:19:01 PM 5/3/2016 pw:\\DCPWAPP1.bkr.mbakercorp.com:pwprod\Documents\Projects\Lakewood_Office\Boulder_County_Emergency_Transportation\T04\08_Sheet_Files\06_Structures\DGN\Walls\138200_WALL_25.dgn

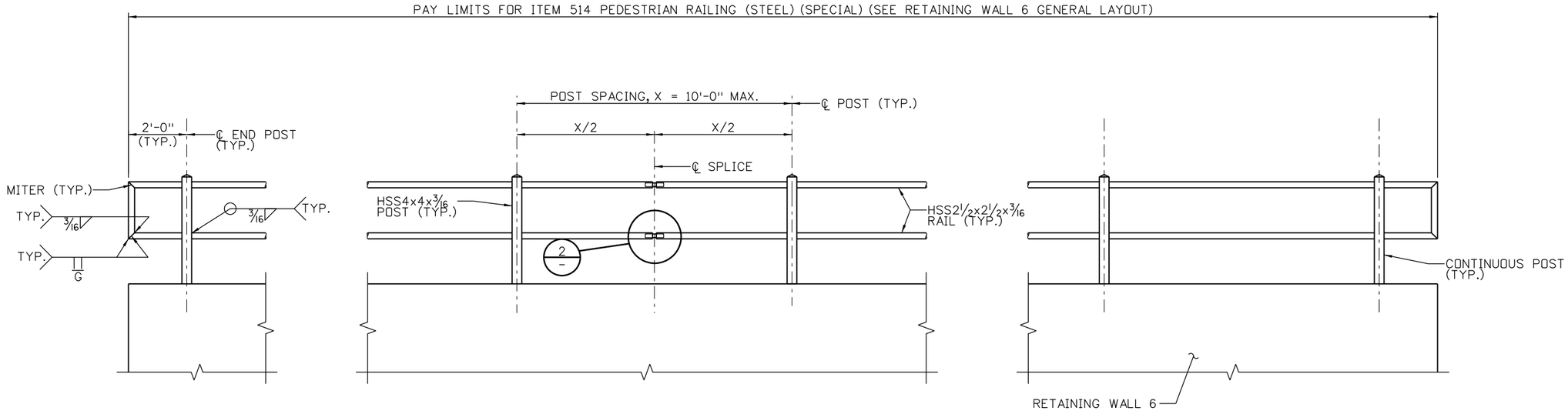

ELEVATION

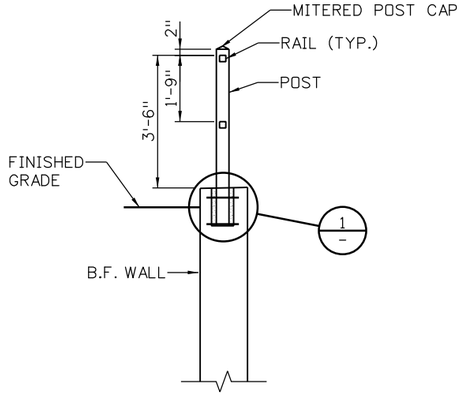

TYPICAL SECTION

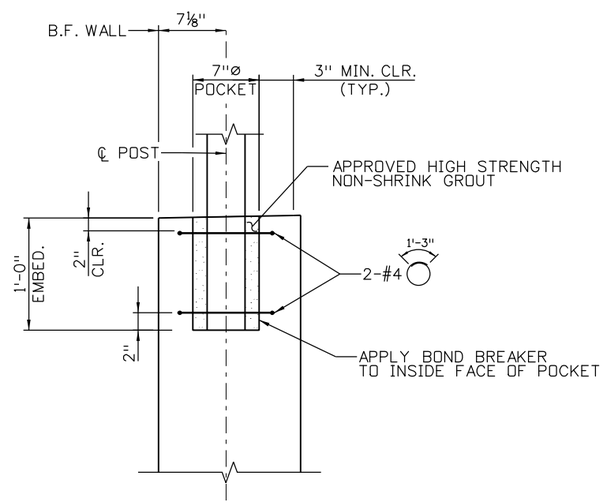

1 ANCHORAGE DETAIL 1/–

WALL REINFORCING NOT SHOWN

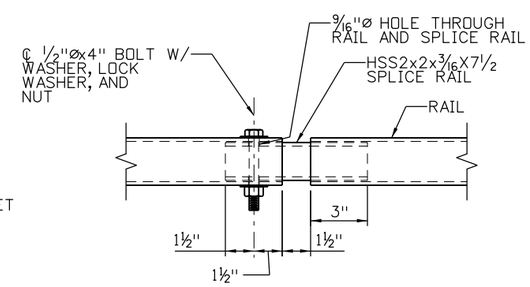

RAIL SPLICE DETAIL 2/–

ALL EDGES SHALL BE GROUND SMOOTH & ROUNDED

NOTES:

1. PRIOR TO FABRICATION, WORKING DRAWINGS WHICH COMPLY WITH THE REQUIREMENTS OF SECTION 105 SHALL BE SUBMITTED TO THE ENGINEER FOR INFORMATION ONLY.
2. POSTS SHALL BE PLUMB.
3. ALL STEEL COMPONENTS AND CONNECTIONS SHALL BE GALVANIZED AND POWDER COATED AFTER FABRICATION IN ACCORDANCE WITH SECTION 509 AND 606.
4. SPLICES SHALL BE LOCATED NOT LESS THAN TWO POST SPACES APART.
5. ALL MATERIALS AND WORKMANSHIP REQUIRED FOR THE FABRICATION AND INSTALLATION OF THE PEDESTRIAN RAIL SHALL BE INCLUDED IN THE COST OF ITEM 514 PEDESTRIAN RAILING (STEEL) (SPECIAL).
6. ALL BOLTS THAT HAVE LOCK WASHERS SHALL BE TIGHTENED TO SNUG ONLY.
7. GROUT SHALL HAVE A MINIMUM COMPRESSIVE STRENGTH OF 5,000 PSI.

DESIGN DATA:

AASHTO LRFD, BRIDGE DESIGN SPECIFICATIONS, SIXTH EDITION WITH INTERIMS THROUGH 2012.

DESIGN METHOD: LRFD

LIVE LOAD PER AASHTO LRFD SECTION 13.8.2

MATERIAL SPECIFICATIONS:

POSTS AND RAIL	=	ASTM A 500 GRADE B
PLATES	=	ASTM A 709 GRADE 36
BOLTS	=	ASTM A 307
NUTS	=	ASTM A 563 C3
WASHERS	=	ASTM F 436 TYPE 3

KEYNOTES:

1. THE CONTRACTOR MAY SUBMIT ALTERNATE DETAILS FOR APPROVAL.

60% SET

CALL UTILITY NOTIFICATION CENTER OF COLORADO
CALL 2-BUSINESS DAYS IN ADVANCE BEFORE YOU DIG, GRADE, OR EXCAVATE FOR THE MARKING OF UNDERGROUND MEMBER UTILITIES

REVISIONS: NO.	DATE	REVISION DESCRIPTION:

BOULDER COUNTY TRANSPORTATION DEPARTMENT
ENGINEERING DIVISION
Michael Baker INTERNATIONAL

DESIGNED:	CAD:	CHECKED:	DATE:
DLT	BMT		5/3/2016

LOGAN MILL ROAD
PEDESTRIAN RAILING (STEEL) (SPECIAL)

PROJECT NO: 4012.SEPT12C39 SHEET NO: 140

brett.terrell 6:19:19 PM 5/3/2016 pw:\\DCPWAPP1.bkr.mbakercorp.com:pwprod\Documents\Projects\Lakewood_Office\Boulder_County_Emergency_Transportation\T04\08_Sheet_Files\06_Structures\DGN\Walls\138200_WALL_26.dgn

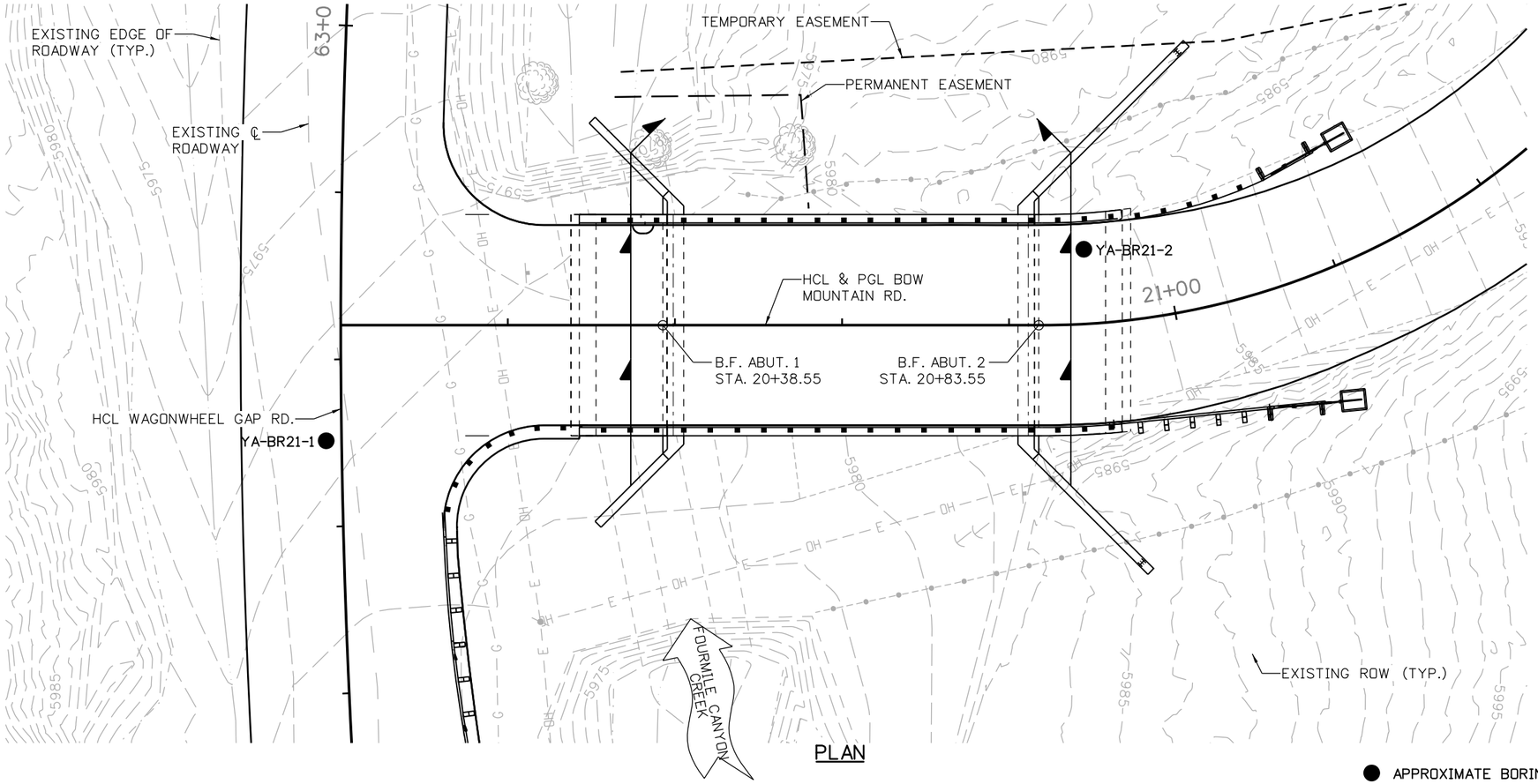

PLAN

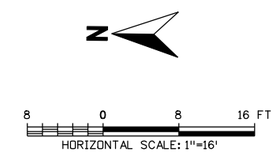

LEGEND

- FILL WITH GRAVEL AS MAJOR SOIL
- USCS SILTY SAND
- USCS POORLY-GRADED GRAVEL
- BOULDERS
- USCS SILTY GRAVEL
- GRANITE

● APPROXIMATE BORING LOCATION

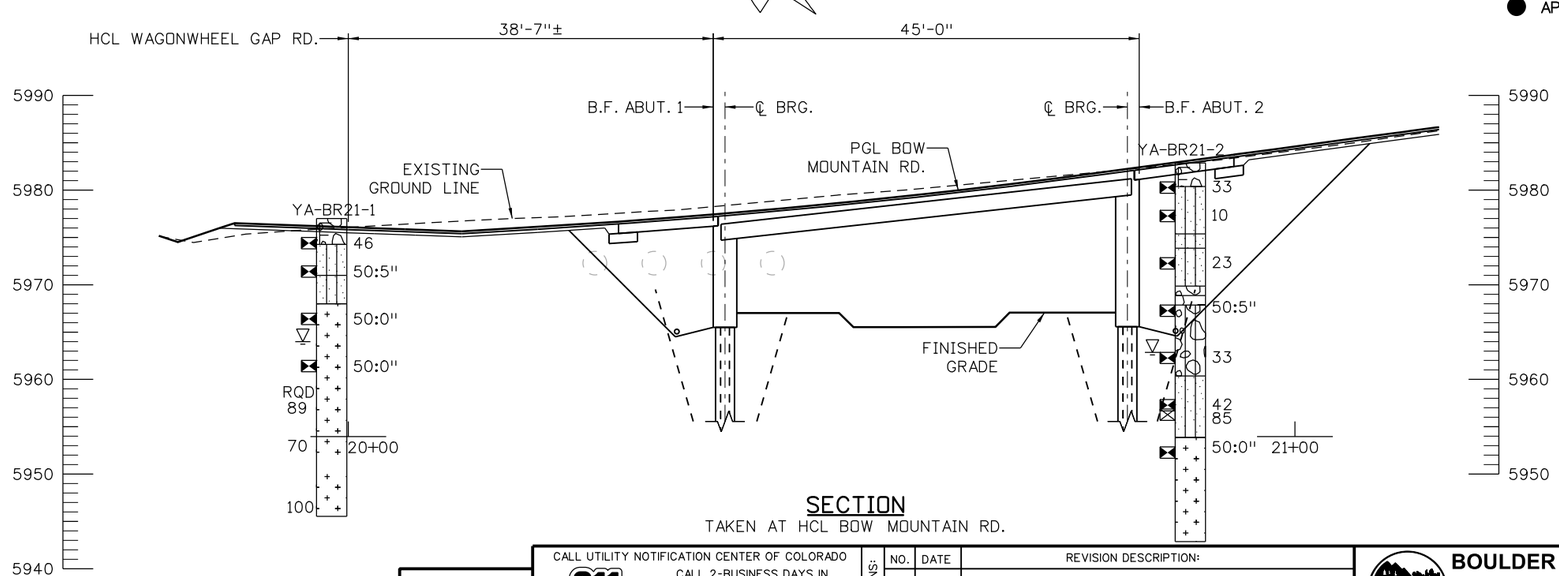

SECTION

TAKEN AT HCL BOW MOUNTAIN RD.

TYPICAL BOREHOLE LOG

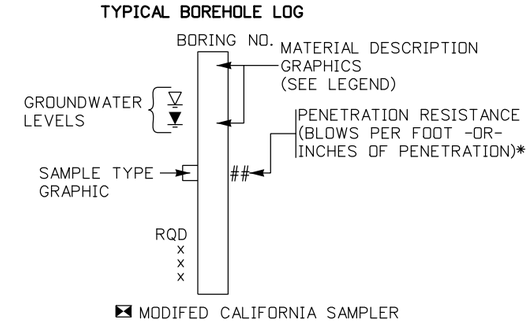

*E.G. A VALUE OF 50/3 OR 50:3 INDICATES THAT 50 BLOWS WERE APPLIED TO THE SAMPLER, WITH A PENETRATION OF 3 INCHES.

Yeh and Associates, Inc.
Consulting Engineers & Scientists

90% SET

CALL UTILITY NOTIFICATION CENTER OF COLORADO
811
CALL 2-BUSINESS DAYS IN ADVANCE BEFORE YOU DIG, GRADE, OR EXCAVATE FOR THE MARKING OF UNDERGROUND MEMBER UTILITIES

REVISIONS:	NO.	DATE	REVISION DESCRIPTION:

Boulder County
Michael Baker INTERNATIONAL

BOULDER COUNTY TRANSPORTATION DEPARTMENT
ENGINEERING DIVISION

DESIGNED:	CAD:	CHECKED:	DATE:
SCS	MJW		5/3/2016

BOW MOUNTAIN BRIDGE
ENGINEERING GEOLOGY

PROJECT NO: 4043.SEPT12C34 | SHEET NO: 141

Mike Wolz 6:12:03 PM c:\pwwbi-local\baker_projects\mike.wolz\d0279836\138200_BRDG_EG01.dgn

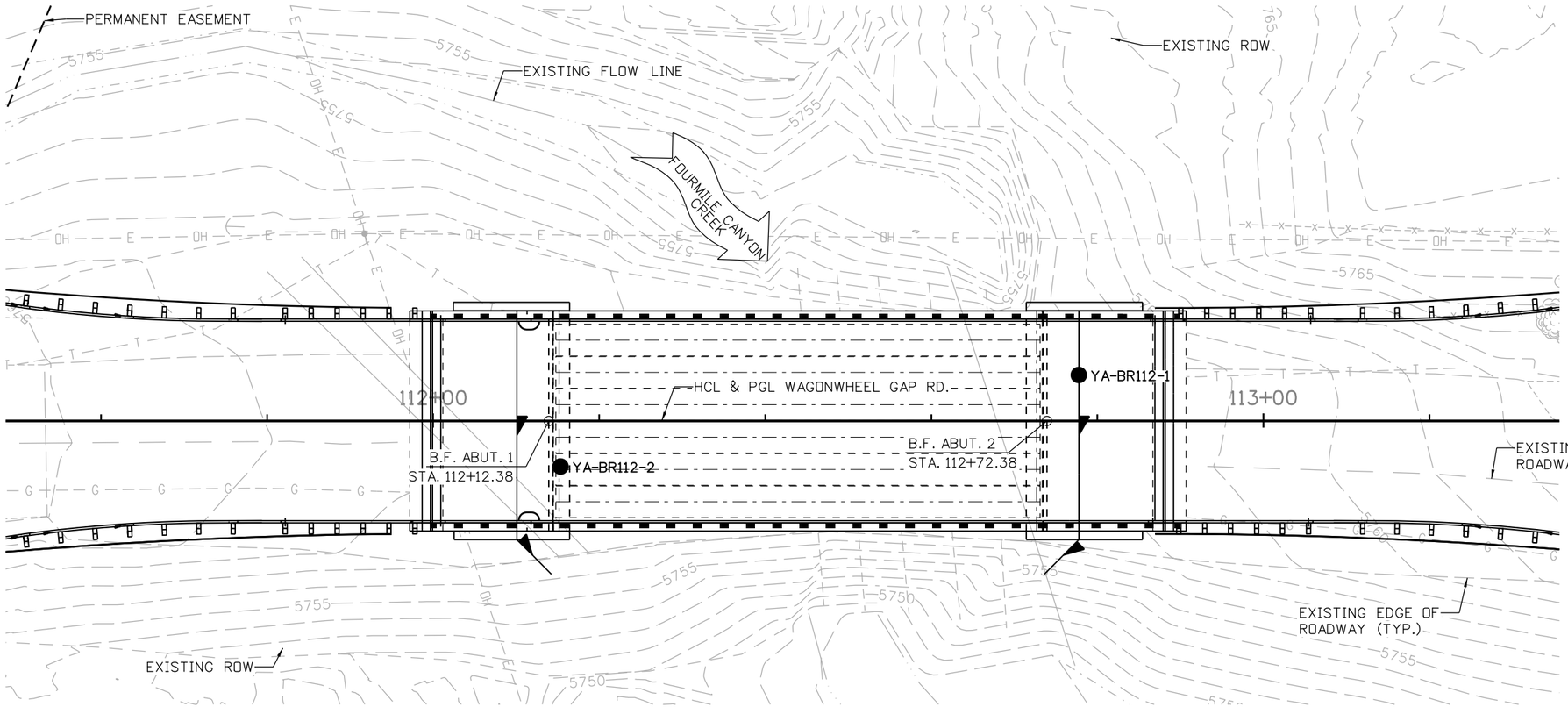

PLAN

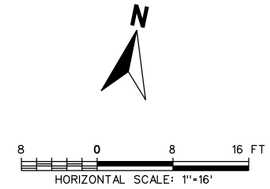

● APPROXIMATE BORING LOCATION

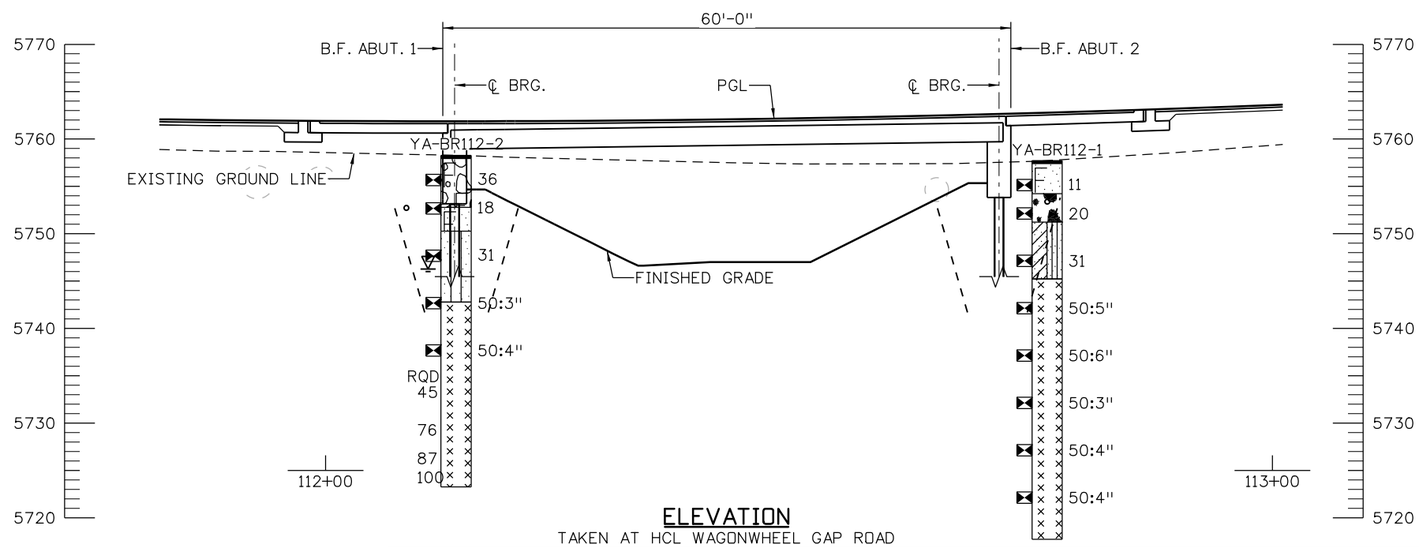

ELEVATION

TAKEN AT HCL WAGONWHEEL GAP ROAD

LEGEND

- ASPHALT
- FILL WITH SAND AS MAJOR SOIL
- USCS WELL-GRADED GRAVEL
- USCS CLAYEY SAND
- FILL WITH GRAVEL AS MAJOR SOIL
- USCS SILTY SAND
- SILTSTONE

TYPICAL BOREHOLE LOG

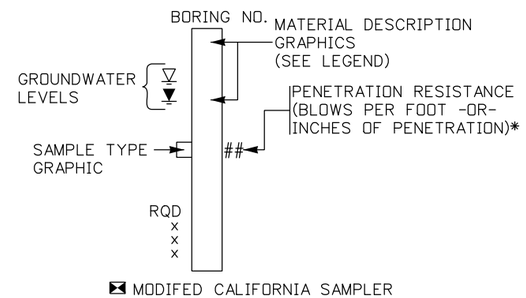

*E.G. A VALUE OF 50/3 OR 50:3 INDICATES THAT 50 BLOWS WERE APPLIED TO THE SAMPLER, WITH A PENETRATION OF 3 INCHES.

Yeh and Associates, Inc.
Consulting Engineers & Scientists

90% SET

CALL UTILITY NOTIFICATION CENTER OF COLORADO
811
CALL 2-BUSINESS DAYS IN ADVANCE BEFORE YOU DIG, GRADE, OR EXCAVATE FOR THE MARKING OF UNDERGROUND MEMBER UTILITIES

REVISIONS:	NO.	DATE	REVISION DESCRIPTION:

Boulder County

BOULDER COUNTY TRANSPORTATION DEPARTMENT
ENGINEERING DIVISION

Michael Baker INTERNATIONAL

DESIGNED:	CAD:	CHECKED:	DATE:
SCS	MJW		5/3/2016

LEE HILL APPROACH BRIDGE
ENGINEERING GEOLOGY

PROJECT NO: 4043.SEPT12C34 | SHEET NO: 142

Mike Walz 6:14:16 PM pw:\\DCPWAPP1.bkr.mbakercorp.com:pwprod\Documents\Projects\Lakewood_Office\Boulder_County_Emergency_Transportation\T04\08_Sheet_Files\01_Geotech\DGN\138200_BR06_EG02.dgn

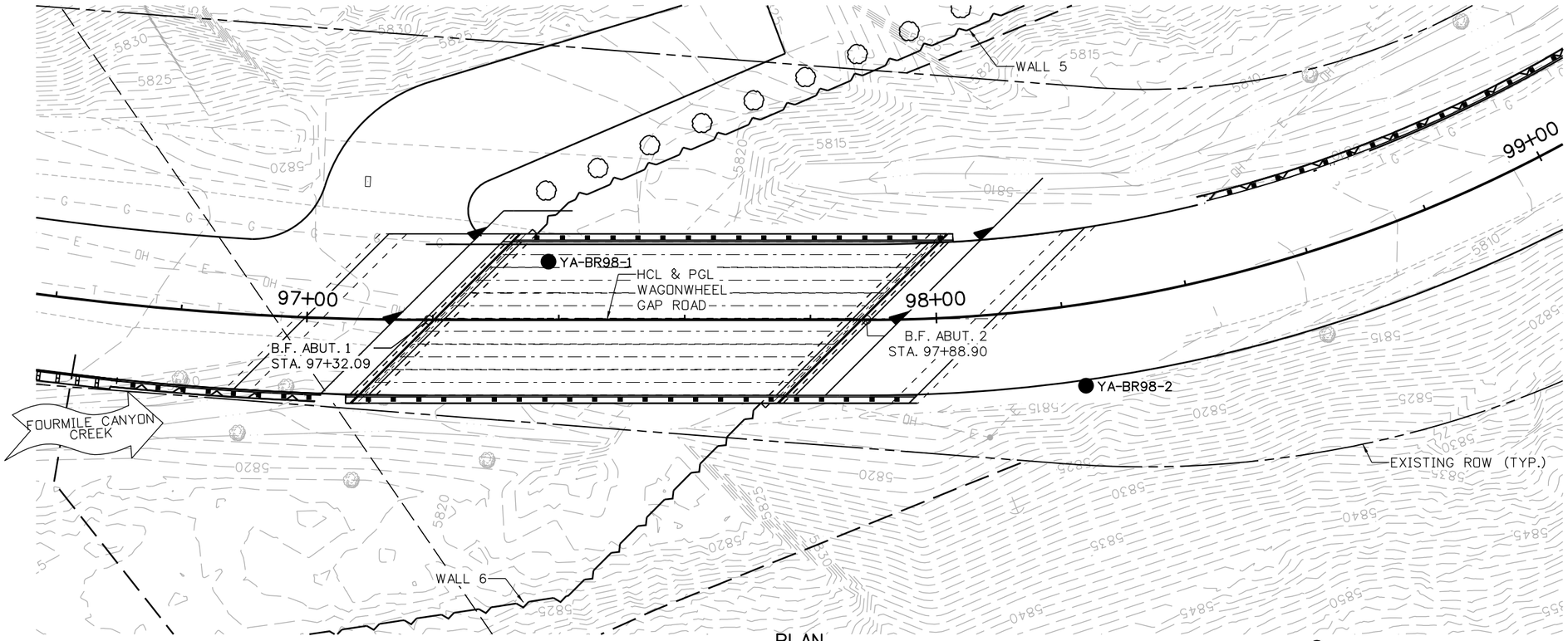

PLAN

● APPROXIMATE BORING LOCATION

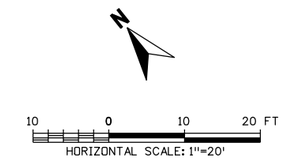

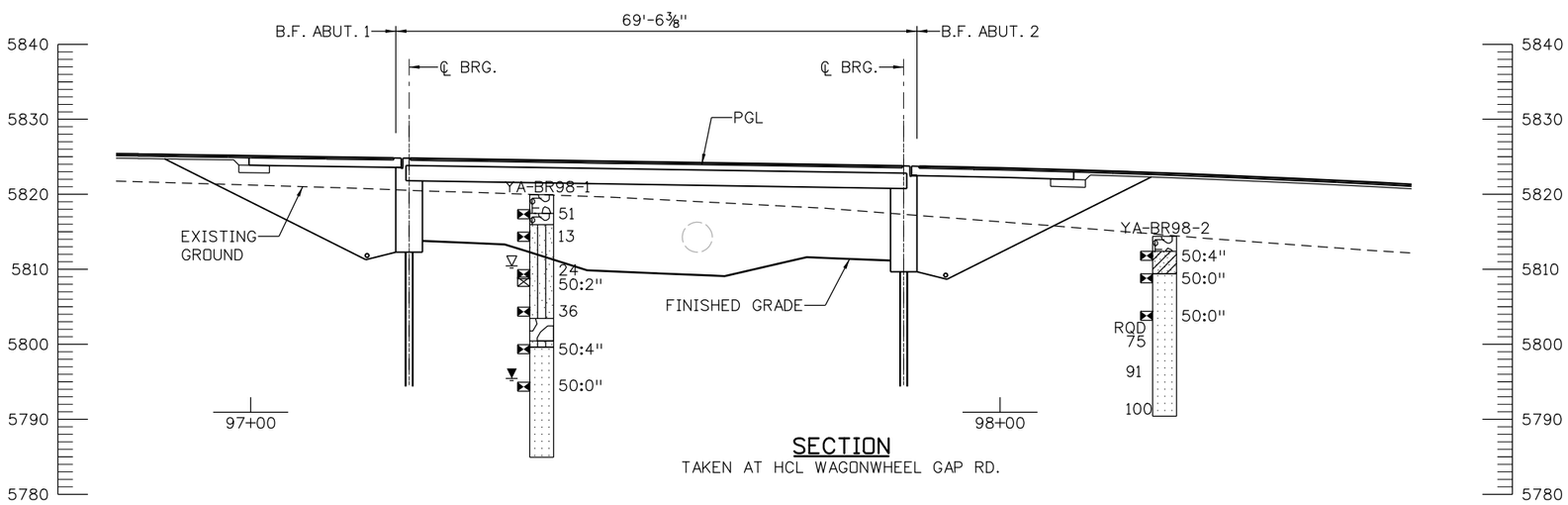

SECTION

TAKEN AT HCL WAGONWHEEL GAP RD.

LEGEND

Fill with Gravel as major soil
USCS Silty Sand
Boulders
USCS Clayey Sand
Sandstone

TYPICAL BOREHOLE LOG

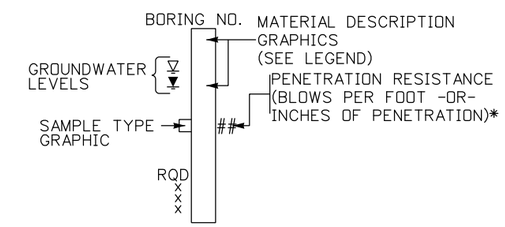

*E.G. A VALUE OF 50/3 OR 50:3 INDICATES THAT 50 BLOWS WERE APPLIED TO THE SAMPLER, WITH A PENETRATION OF 3 INCHES.

Mike Wolz 6:20:19 PM pw:\\DCPWAPP1.bkr.mbakercorp.com:pwprod\Documents\Projects\Lakewood_Office\Boulder_County_Emergency_Transportation\T04\08_Sheet_Files\01_Geotech\DGN\138200_BRDG_EG03.dgn

Yeh and Associates, Inc.
Consulting Engineers & Scientists

90% SET

CALL UTILITY NOTIFICATION CENTER OF COLORADO
811
CALL 2-BUSINESS DAYS IN ADVANCE BEFORE YOU DIG, GRADE, OR EXCAVATE FOR THE MARKING OF UNDERGROUND MEMBER UTILITIES

REVISIONS:	NO.	DATE	REVISION DESCRIPTION:

Boulder County
Michael Baker INTERNATIONAL

BOULDER COUNTY TRANSPORTATION DEPARTMENT
ENGINEERING DIVISION

DESIGNED:	CAD:	CHECKED:	DATE:
SCS	MJW		5/3/2016

WAGONWHEEL GAP ROAD
ENGINEERING GEOLOGY

PROJECT NO: 4043.SEPT12C34 | SHEET NO: 143

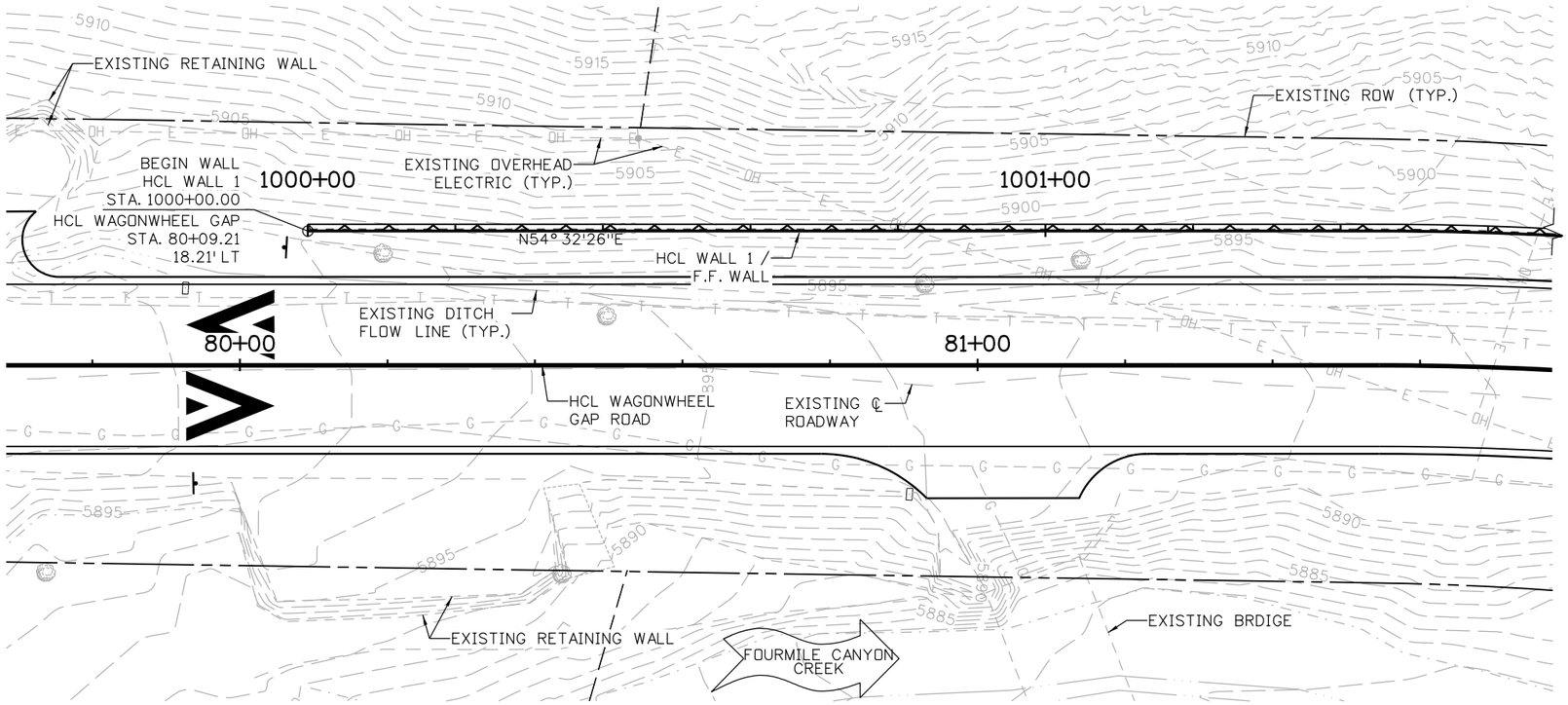

PLAN

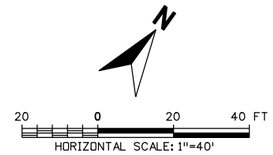

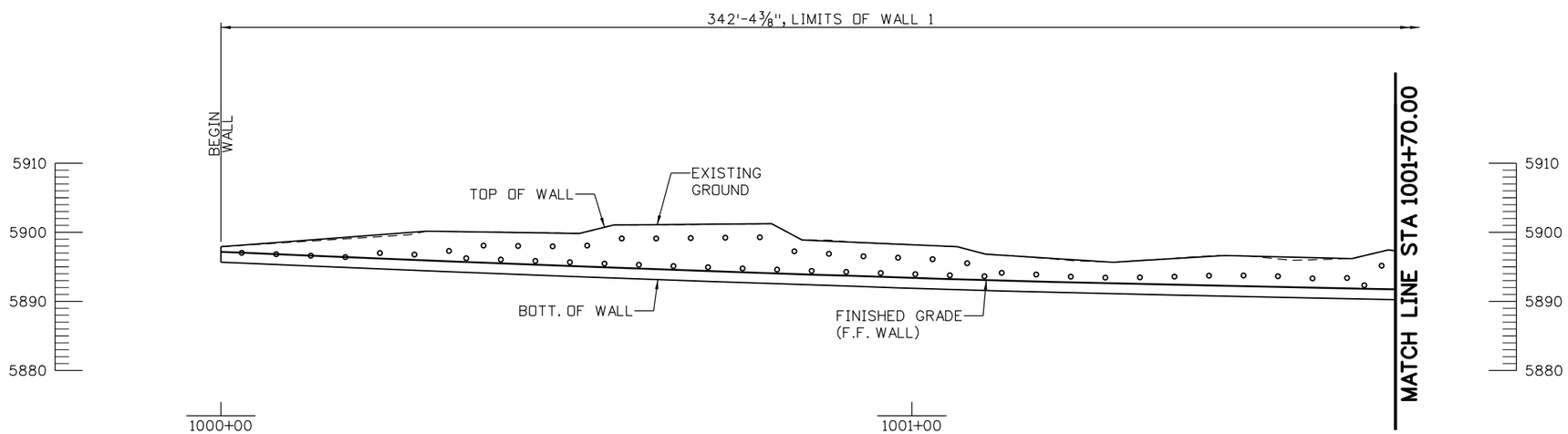

ELEVATION

TAKEN AT HCL WALL 1 / F.F. WALL

∘ GROUND NAIL

Sv = 4'
Sh = 5'

Mike Walz 2:36:05 PM pw:\\DCPWAPP1.bkr.mbakercorp.com:pwprod\Documents\Projects\Lakewood_Office\Boulder_County_Emergency_Transportation\T04\08_Sheet_Files\01_Geotech\DGN\138200_GNW_WALL_01.dgn

Yeh and Associates, Inc.
Consulting Engineers & Scientists

90% SET

CALL UTILITY NOTIFICATION CENTER OF COLORADO
811
CALL 2-BUSINESS DAYS IN ADVANCE BEFORE YOU DIG, GRADE, OR EXCAVATE FOR THE MARKING OF UNDERGROUND MEMBER UTILITIES

REVISIONS: NO.	DATE	REVISION DESCRIPTION:

Boulder County

BOULDER COUNTY TRANSPORTATION DEPARTMENT
ENGINEERING DIVISION

Michael Baker INTERNATIONAL

DESIGNED:	CAD:	CHECKED:	DATE:
SCS	MJW		5/2/2016

WAGONWHEEL GAP ROAD WALLS
RETAINING WALL 1
ENGINEERING GEOLOGY (1/ 2)

PROJECT NO: 4043.SEPT12C34 | SHEET NO: 144

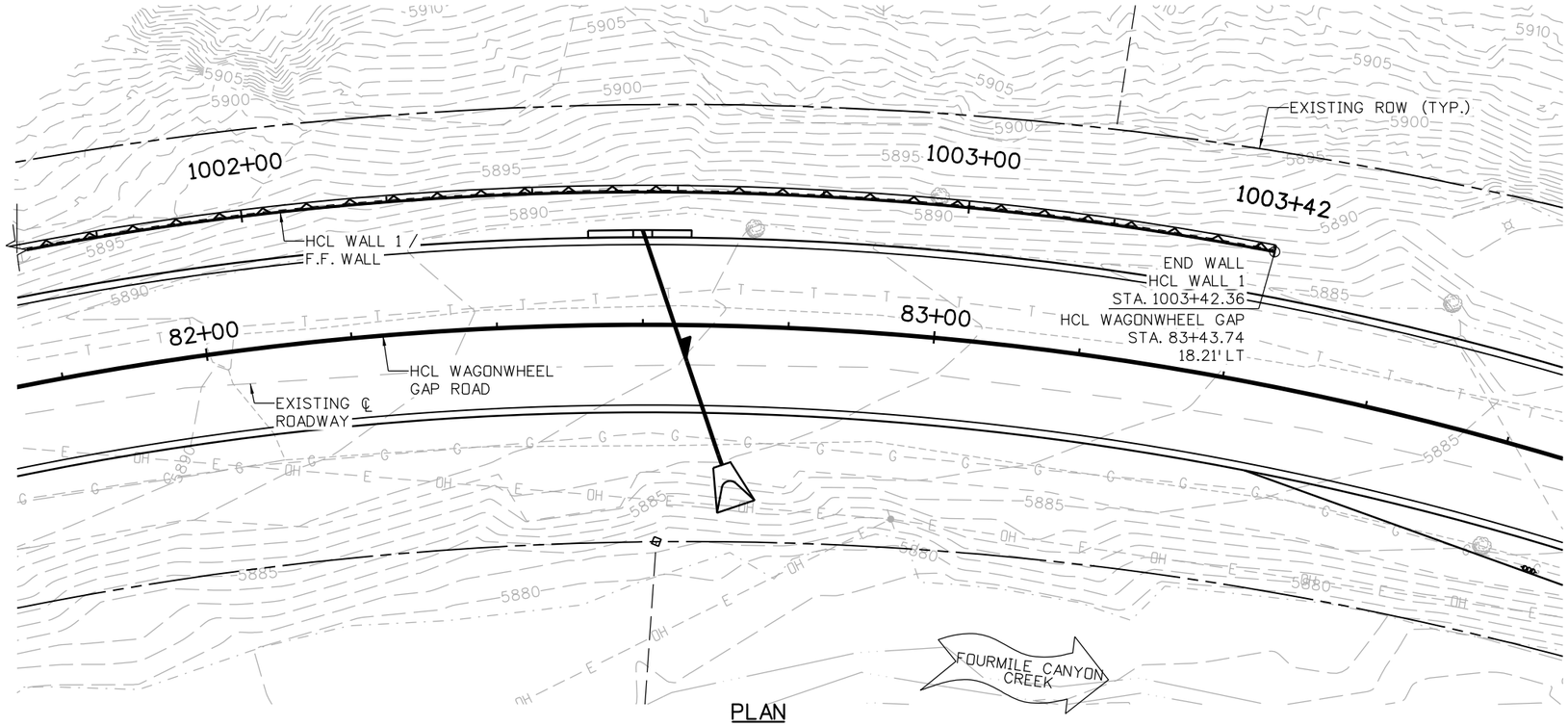

PLAN

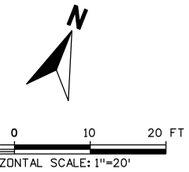

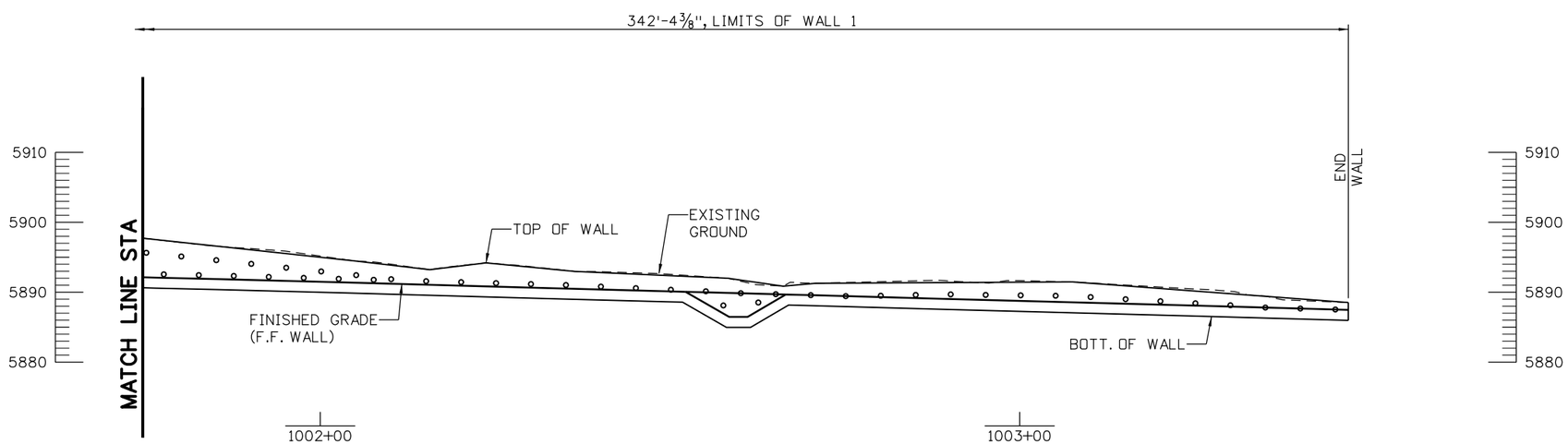

GROUND NAIL

Sv = 4'
Sh = 5'

ELEVATION
TAKEN AT HCL WALL 1 / F.F. WALL

Yeh and Associates, Inc.
Consulting Engineers & Scientists

90% SET

CALL UTILITY NOTIFICATION CENTER OF COLORADO
811
CALL 2-BUSINESS DAYS IN ADVANCE BEFORE YOU DIG, GRADE, OR EXCAVATE FOR THE MARKING OF UNDERGROUND MEMBER UTILITIES

REVISIONS: NO.	DATE	REVISION DESCRIPTION:

Boulder County
Michael Baker INTERNATIONAL

BOULDER COUNTY TRANSPORTATION DEPARTMENT
ENGINEERING DIVISION

DESIGNED:	CAD:	CHECKED:	DATE:
SCS	MJW		5/3/2016

WAGONWHEEL GAP ROAD WALLS
RETAINING WALL 1
ENGINEERING GEOLOGY (2/2)

PROJECT NO: 4043.SEPT12C34 | SHEET NO: 145

Mike Wolz 6:09:19 PM pw:\\DCPWAPP1.bkr.mbakercorp.com:pwprod\Documents\Projects\Lakewood_Office\Boulder_County_Emergency_Transportation\T04\08_Sheet_Files\01_Geotech\DGN\138200_GNW_WALL_02.dgn

PLAN

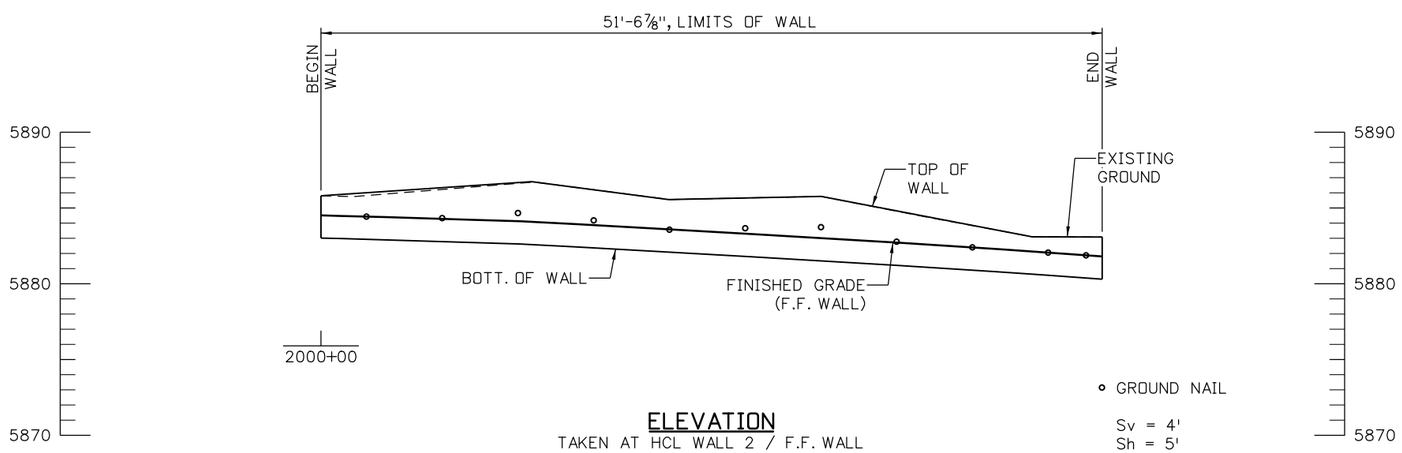

ELEVATION

TAKEN AT HCL WALL 2 / F.F. WALL

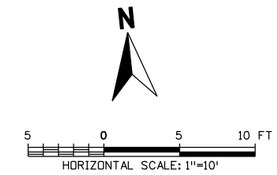

Yeh and Associates, Inc.
Consulting Engineers & Scientists

90% SET

CALL UTILITY NOTIFICATION CENTER OF COLORADO
811
CALL 2-BUSINESS DAYS IN ADVANCE BEFORE YOU DIG, GRADE, OR EXCAVATE FOR THE MARKING OF UNDERGROUND MEMBER UTILITIES

REVISIONS:	NO.	DATE	REVISION DESCRIPTION:

Boulder County
Michael Baker INTERNATIONAL

BOULDER COUNTY TRANSPORTATION DEPARTMENT
ENGINEERING DIVISION

DESIGNED:	CAD:	CHECKED:	DATE:
SCS	MJW		5/2/2016

WAGONWHEEL GAP ROAD WALLS
RETAINING WALL 2
ENGINEERING GEOLOGY

PROJECT NO: 4043.SEPT12C34 | SHEET NO: 146

Mike Wolz 3:30:32 PM pw:\\DCPWAPP1.bkr.mbakercorp.com:pwprod\Documents\Projects\Lakewood_Office\Boulder_County_Emergency_Transportation\T04\08_Sheet_Files\01_Geotech\DGN\138200_GNW_WALL_03.dgn

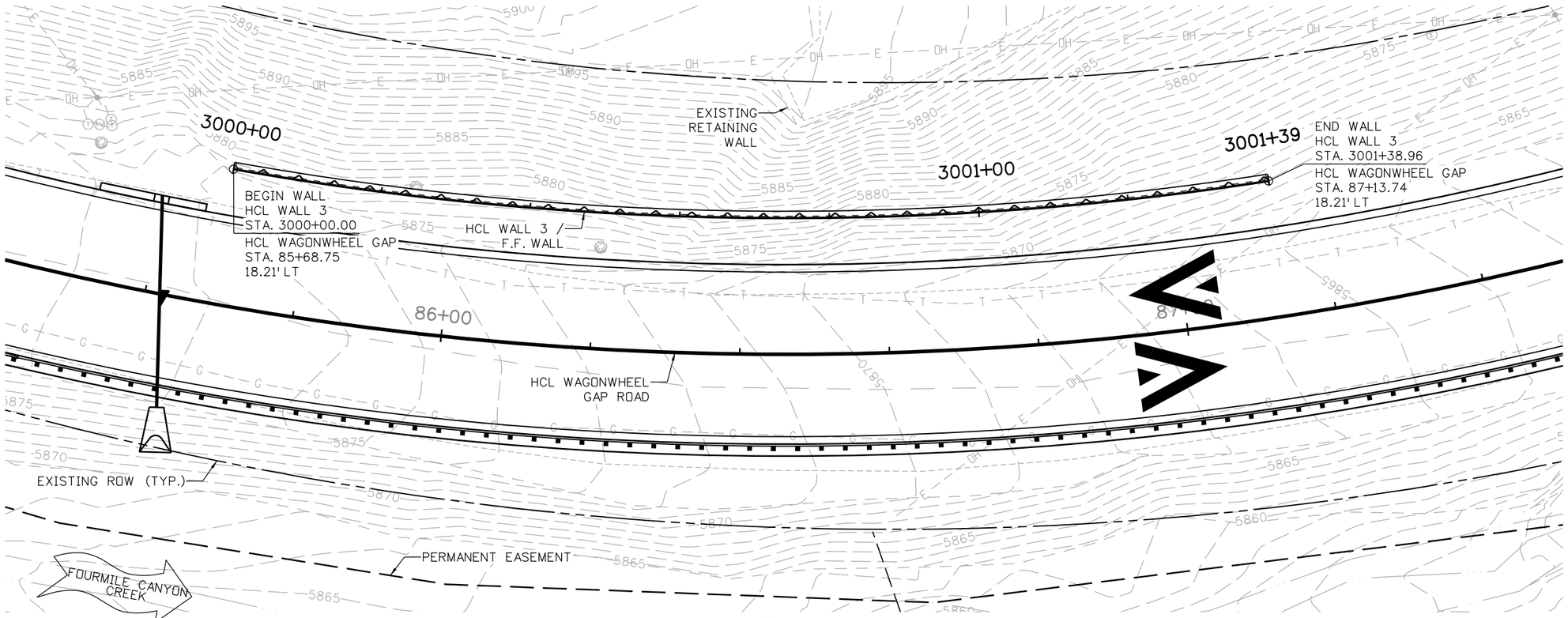

PLAN

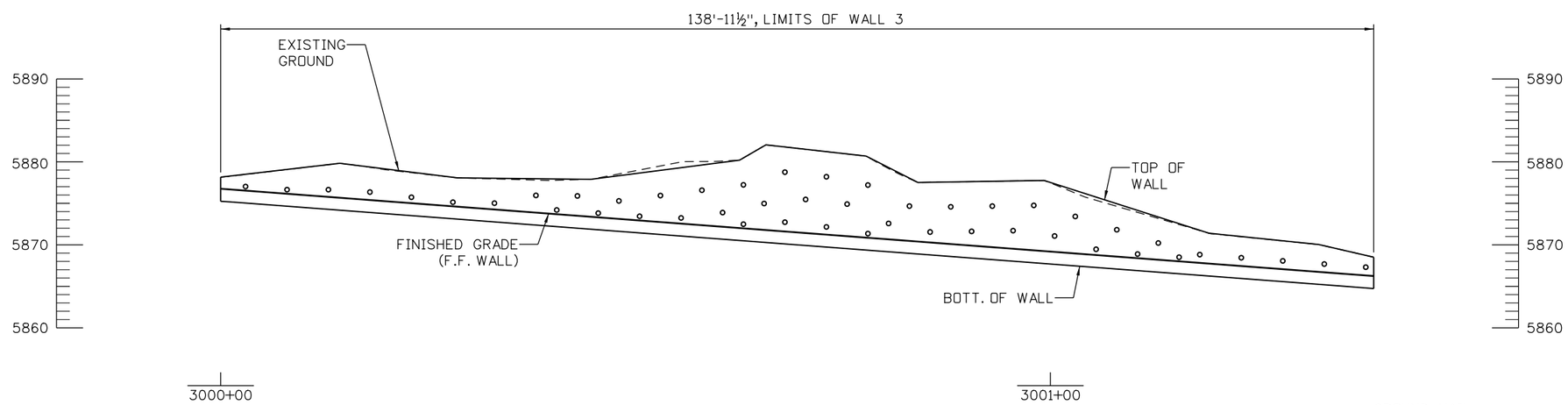

ELEVATION

TAKEN AT HCL WALL 3 / F.F. WALL

∘ GROUND NAIL

Sv = 3'
Sh = 5'

Yeh and Associates, Inc.
Consulting Engineers & Scientists

90% SET

CALL UTILITY NOTIFICATION CENTER OF COLORADO
CALL 2-BUSINESS DAYS IN ADVANCE BEFORE YOU DIG, GRADE, OR EXCAVATE FOR THE MARKING OF UNDERGROUND MEMBER UTILITIES

REVISIONS: NO.	DATE	REVISION DESCRIPTION:

BOULDER COUNTY TRANSPORTATION DEPARTMENT
ENGINEERING DIVISION

Michael Baker INTERNATIONAL

DESIGNED:	CAD:	CHECKED:	DATE:
SCS	MJW		5/2/2016

WAGONWHEEL GAP ROAD WALLS
RETAINING WALL 3
ENGINEERING GEOLOGY

PROJECT NO: 4043.SEPT12C34 | SHEET NO: 147

Mike Walz 3:52:18 PM pw:\\DCPWAPP1.bkr.mbakercorp.com:pwprod\Documents\Projects\Lakewood_Office\Boulder_County_Emergency_Transportation\T04\08_Sheet_Files\01_Geotech\DGN\138200_GNW_WALL_04.dgn

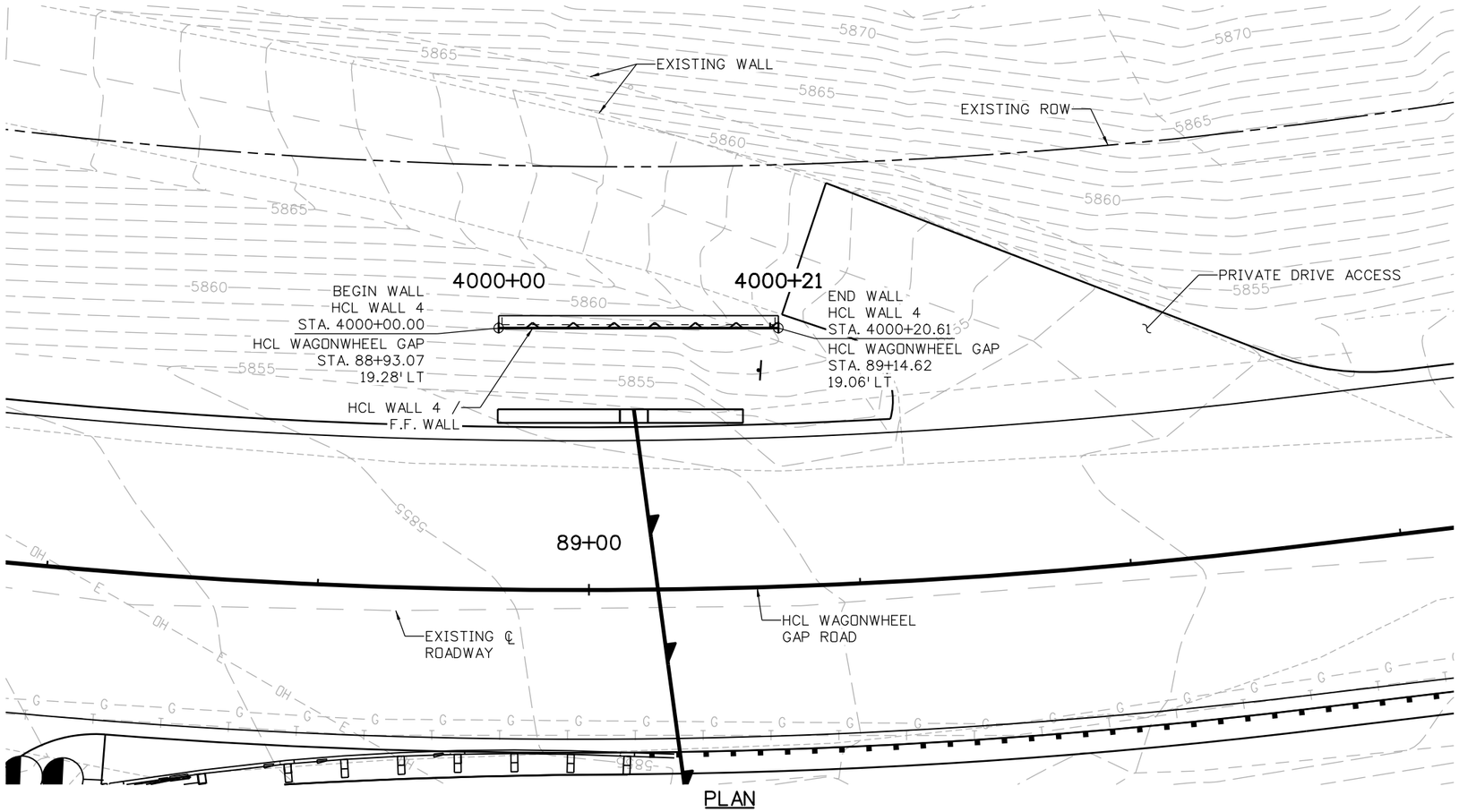

PLAN

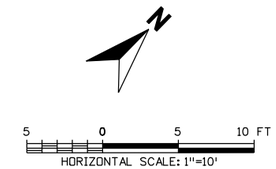

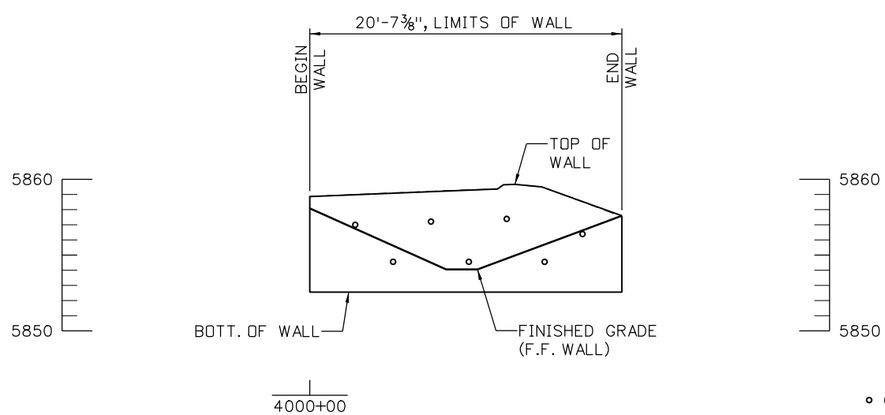

ELEVATION

TAKEN AT HCL WALL 4 / F.F. WALL

∘ GROUND NAIL

Sv = 4'
Sh = 5'

Mike Wolz 4:16:35 PM pw:\\DCPWAPP1bkr.mbakercorp.com:pwprod\Documents\Projects\Lakewood_Office\Boulder_County_Emergency_Transportation\T04\08_Sheet_Files\01_Geotech\DGN\138200_GNW_WALL_05.dgn

Yeh and Associates, Inc.
Consulting Engineers & Scientists

90% SET

CALL UTILITY NOTIFICATION CENTER OF COLORADO
811
CALL 2-BUSINESS DAYS IN ADVANCE BEFORE YOU DIG, GRADE, OR EXCAVATE FOR THE MARKING OF UNDERGROUND MEMBER UTILITIES

REVISIONS:	NO.	DATE	REVISION DESCRIPTION:

BOULDER COUNTY TRANSPORTATION DEPARTMENT
ENGINEERING DIVISION
Boulder County
Michael Baker INTERNATIONAL

DESIGNED:	CAD:	CHECKED:	DATE:
SCS	MJW		5/2/2016

WAGONWHEEL GAP ROAD WALLS
RETAINING WALL 4
ENGINEERING GEOLOGY

PROJECT NO: 4043.SEPT12C34 | SHEET NO: 148

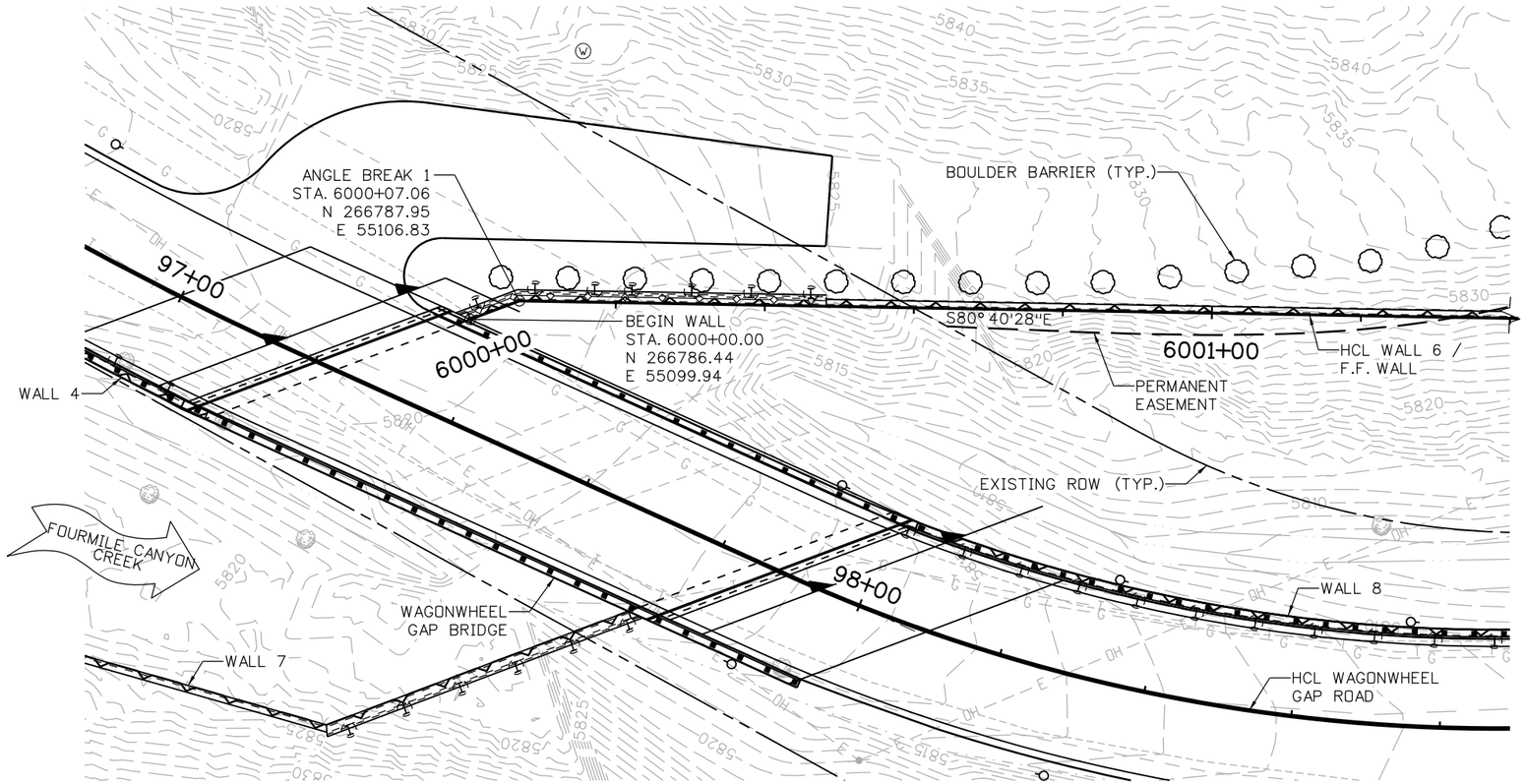

PLAN

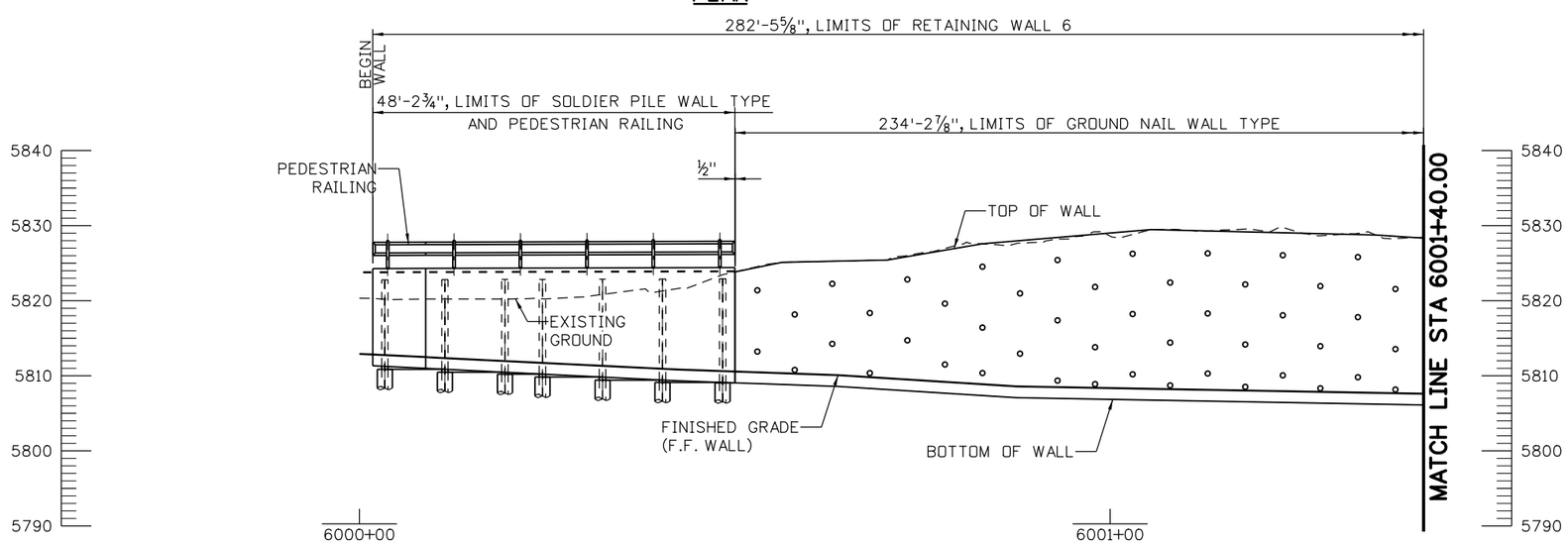

ELEVATION

TAKEN AT HCL WALL 6 / F.F. WALL

GROUND NAIL
Sv = 4'
Sh = 5'

N

10 0 10 20 FT
SCALE: 1"=20'

Mike Wolz 5:12:33 PM pw:\\DCPWAPP1bkr.mbakercorp.com:pwprod\Documents\Projects\Lakewood_Office\Boulder_County_Emergency_Transportation\T04\08_Sheet_Files\01_Geotech\DGN\138200_GNW_WALL_06.dgn

Yeh and Associates, Inc.
Consulting Engineers & Scientists

90% SET

CALL UTILITY NOTIFICATION CENTER OF COLORADO
811
CALL 2-BUSINESS DAYS IN ADVANCE BEFORE YOU DIG, GRADE, OR EXCAVATE FOR THE MARKING OF UNDERGROUND MEMBER UTILITIES

REVISIONS:	NO.	DATE	REVISION DESCRIPTION:

Boulder County

BOULDER COUNTY TRANSPORTATION DEPARTMENT
ENGINEERING DIVISION
Michael Baker INTERNATIONAL

DESIGNED:	CAD:	CHECKED:	DATE:
SCS	MJW		5/3/2016

WAGONWHEEL GAP ROAD WALLS
RETAINING WALL 6
GROUND NAIL LAYOUT (1/2)

PROJECT NO: 4043.SEPT12C34 | SHEET NO: 149

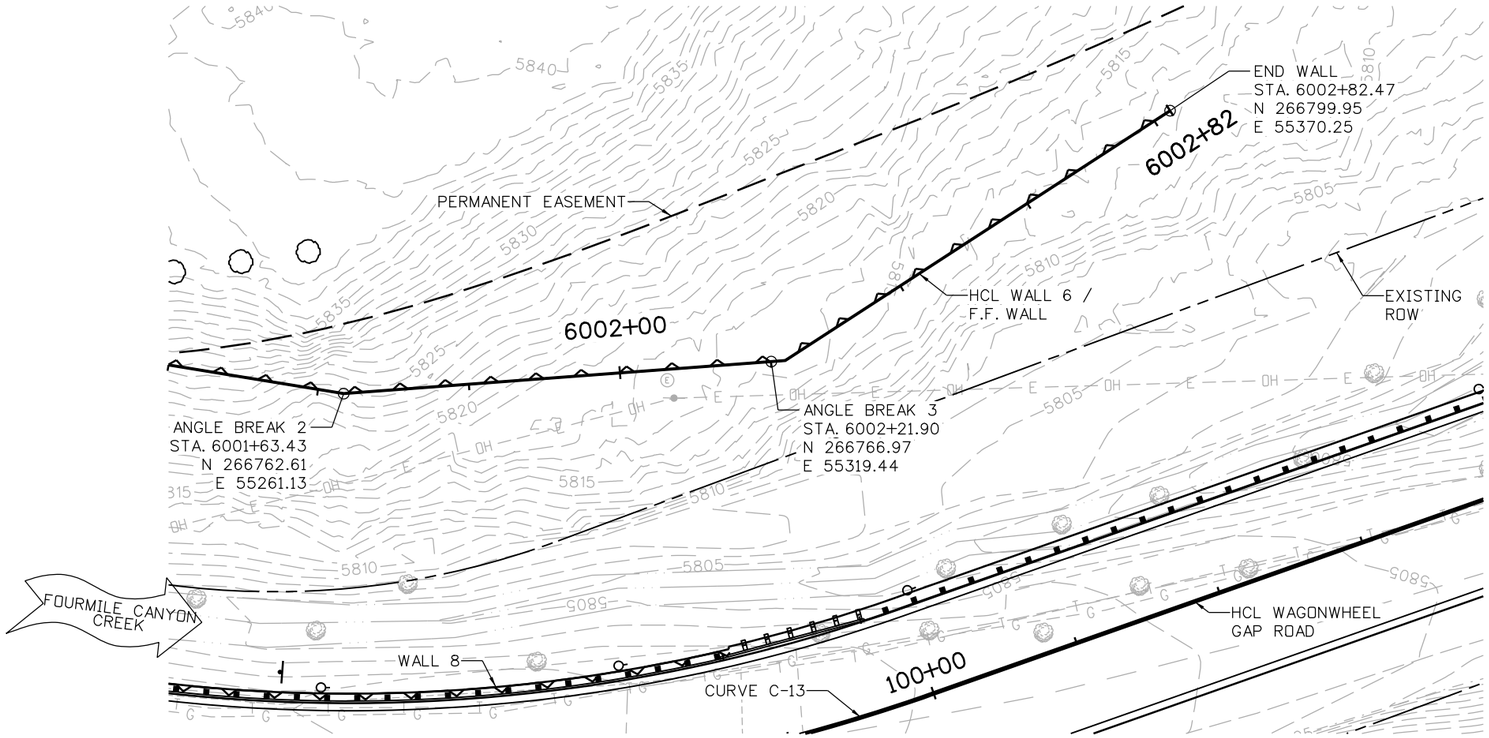

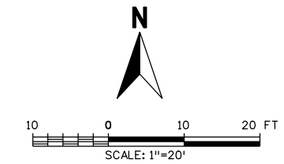

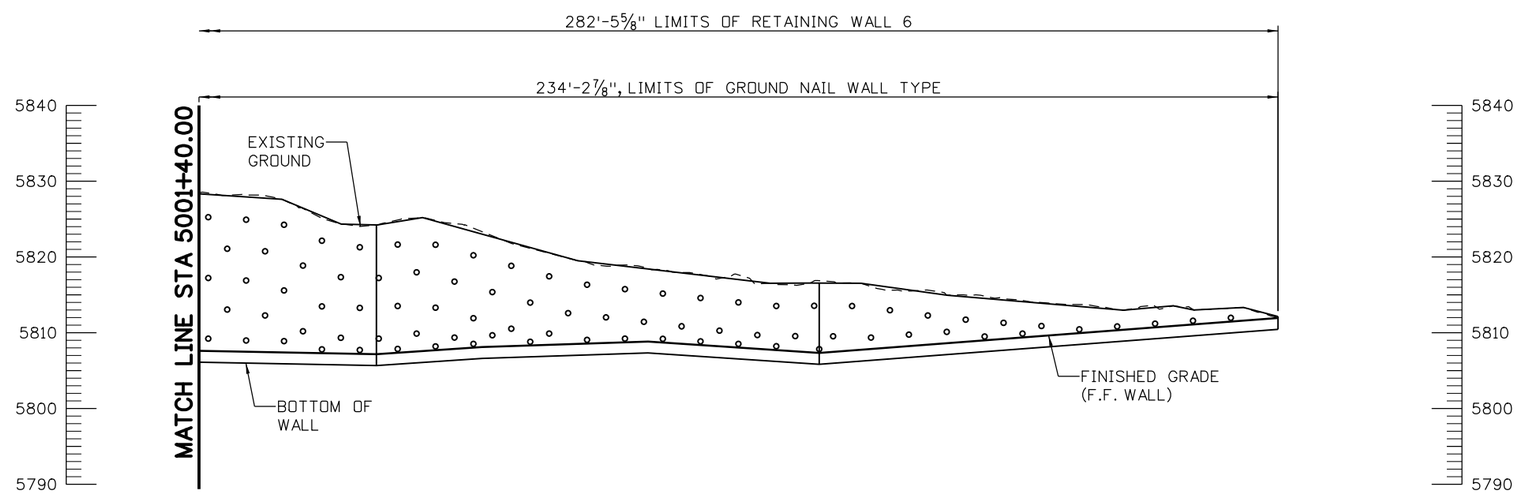

5002+00

ELEVATION

TAKEN AT HCL WALL 6 / F.F. WALL

° GROUND NAIL

Sv = 4'
Sh = 5'

Yeh and Associates, Inc.
Consulting Engineers & Scientists

90% SET

CALL UTILITY NOTIFICATION CENTER OF COLORADO
811
CALL 2-BUSINESS DAYS IN ADVANCE BEFORE YOU DIG, GRADE, OR EXCAVATE FOR THE MARKING OF UNDERGROUND MEMBER UTILITIES

REVISIONS:	NO.	DATE	REVISION DESCRIPTION:

Boulder County

BOULDER COUNTY TRANSPORTATION DEPARTMENT
ENGINEERING DIVISION

Michael Baker INTERNATIONAL

DESIGNED:	CAD:	CHECKED:	DATE:
SCS	MJW		5/3/2016

WAGONWHEEL GAP ROAD WALLS
RETAINING WALL 6
GROUND NAIL LAYOUT (2/2)

PROJECT NO: 4043.SEPT12C34 | SHEET NO: 150

Mike Walz 5:10:59 PM pw:\\DCPWAPP1.bkr.mbakercorp.com:pwprod\Documents\Projects\Lakewood_Office\Boulder_County_Emergency_Transportation\T04\08_Sheet_Files\01_Geotech\DGN\138200_GNW_WALL_06A.dgn

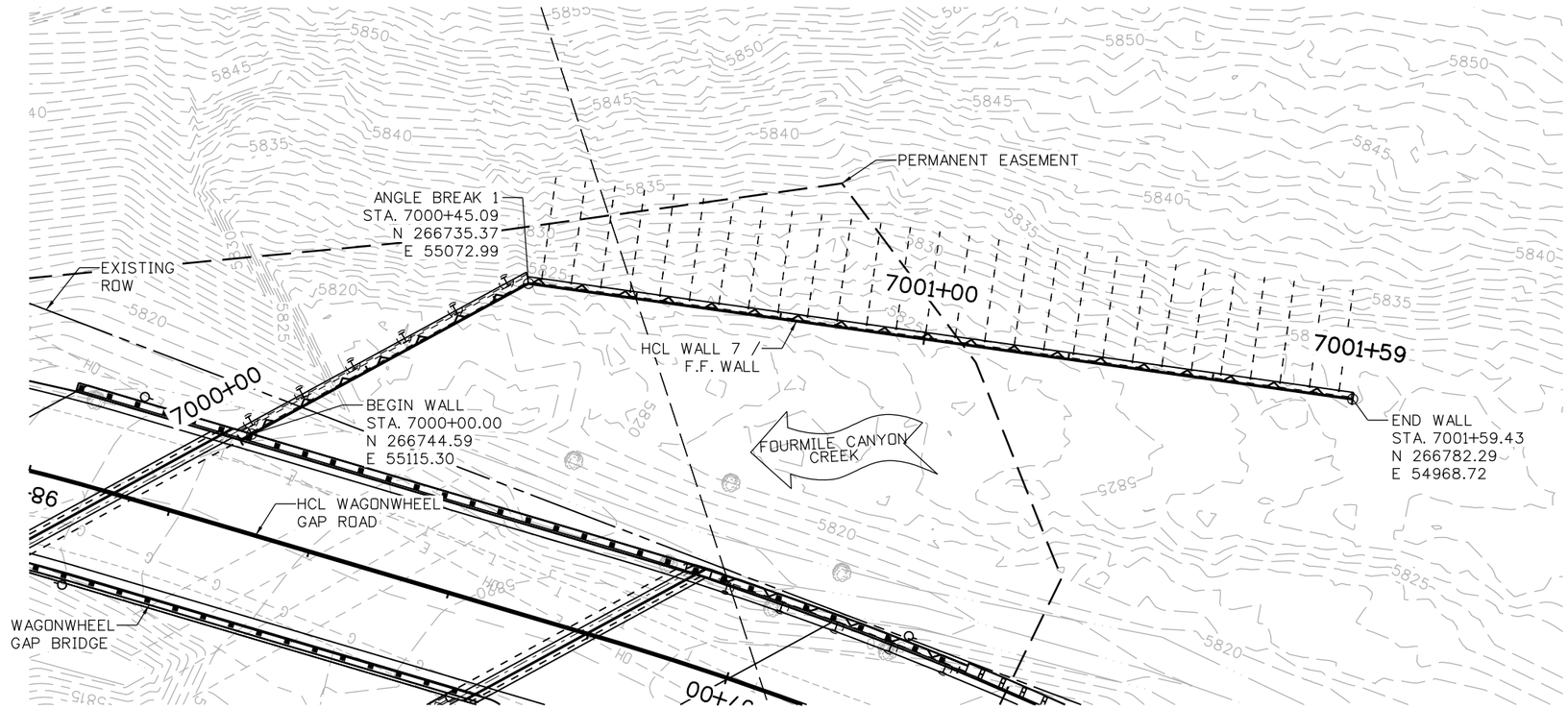

PLAN

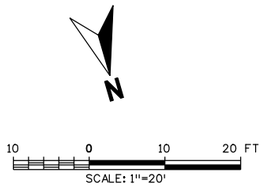

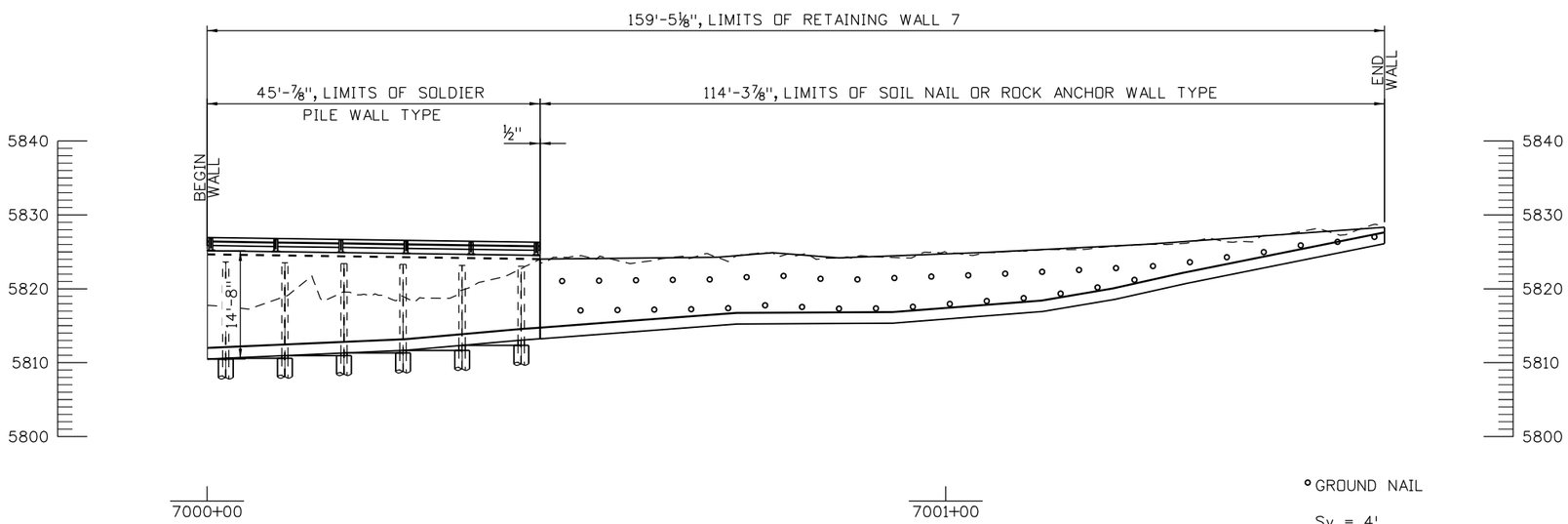

ELEVATION

TAKEN AT HCL WALL 7 / F.F. WALL

° GROUND NAIL

Sv = 4'
Sh = 5'

Yeh and Associates, Inc.
Consulting Engineers & Scientists

90% SET

CALL UTILITY NOTIFICATION CENTER OF COLORADO
811
CALL 2-BUSINESS DAYS IN ADVANCE BEFORE YOU DIG, GRADE, OR EXCAVATE FOR THE MARKING OF UNDERGROUND MEMBER UTILITIES

REVISIONS:	NO.	DATE	REVISION DESCRIPTION:

Boulder County
Michael Baker INTERNATIONAL

BOULDER COUNTY TRANSPORTATION DEPARTMENT
ENGINEERING DIVISION

DESIGNED:	CAD:	CHECKED:	DATE:
SCS	MJW		5/3/2016

WAGONWHEEL GAP ROAD WALLS
RETAINING WALL 7
GROUND NAIL LAYOUT

PROJECT NO: 4043.SEPT12C34 | SHEET NO: 151

Mike Wolz 4:54:22 PM pw:\\DCPWAPP1.bkr.mbakercorp.com:pwprod\Documents\Projects\Lakewood_Office\Boulder_County_Emergency_Transportation\T04\08_Sheet_Files\01_Geotech\DGN\138200_GNW_WALL_08.dgn

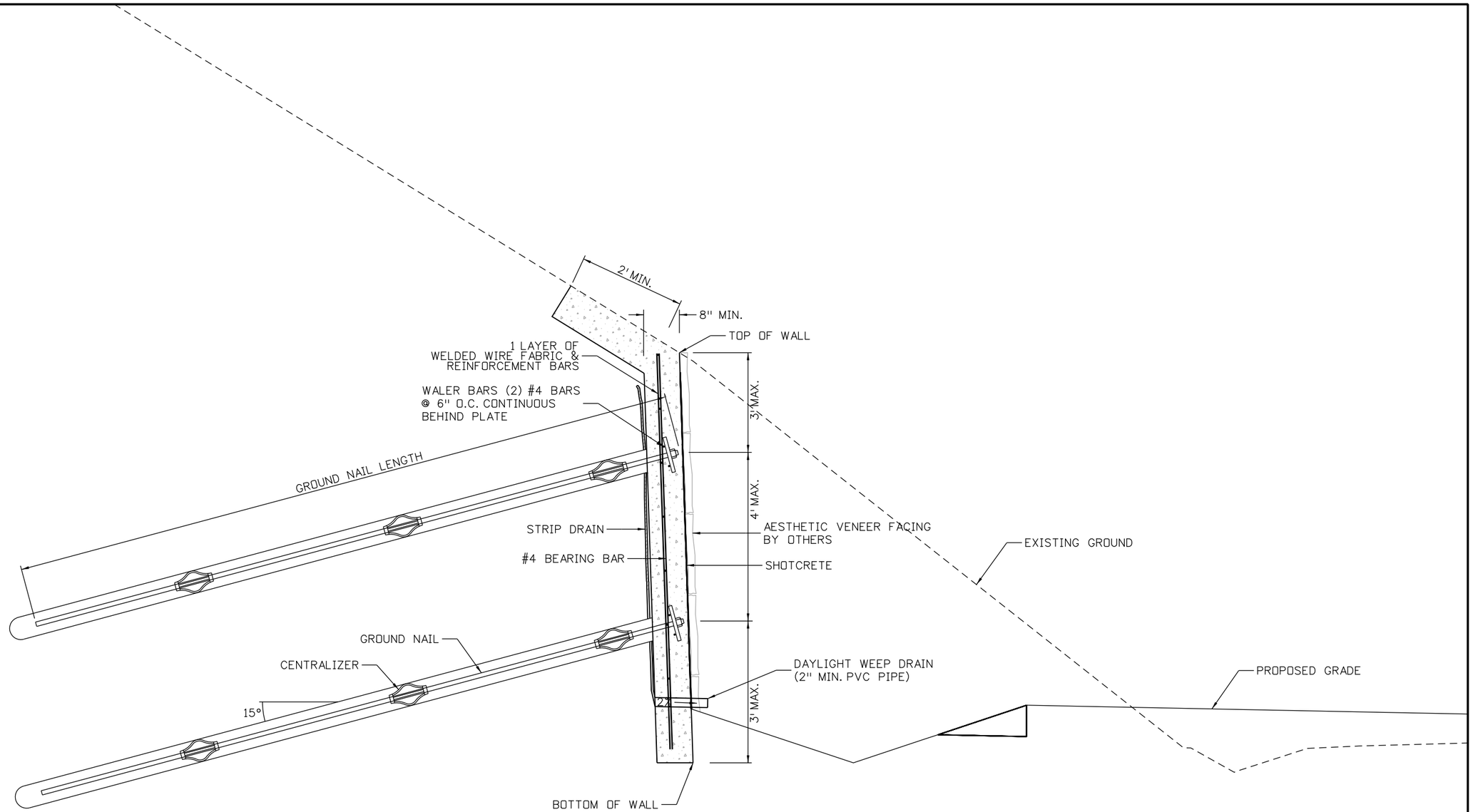

Yeh and Associates, Inc.
Consulting Engineers & Scientists

90% SET

CALL UTILITY NOTIFICATION CENTER OF COLORADO
811
CALL 2-BUSINESS DAYS IN ADVANCE BEFORE YOU DIG, GRADE, OR EXCAVATE FOR THE MARKING OF UNDERGROUND MEMBER UTILITIES

REVISIONS:	NO.	DATE	REVISION DESCRIPTION:

Boulder County

Michael Baker INTERNATIONAL

BOULDER COUNTY TRANSPORTATION DEPARTMENT
ENGINEERING DIVISION

DESIGNED:	CAD:	CHECKED:	DATE:
SCS	MJW		

WAGONWHEEL GAP ROAD
GROUND NAIL WALL 1
TYPICAL SECTION

PROJECT NO: 4041.SEPT12C37 | SHEET NO: 152

Mike Wolz 3:37:35 PM pw:\\DCPWAPP1.bkr.mbakercorp.com:pwprod\Documents\Projects\Lakewood_Office\Boulder_County_Emergency_Transportation\T04\08_Sheet_Files\01_Geotech\DGN\WWG_Typical Section01

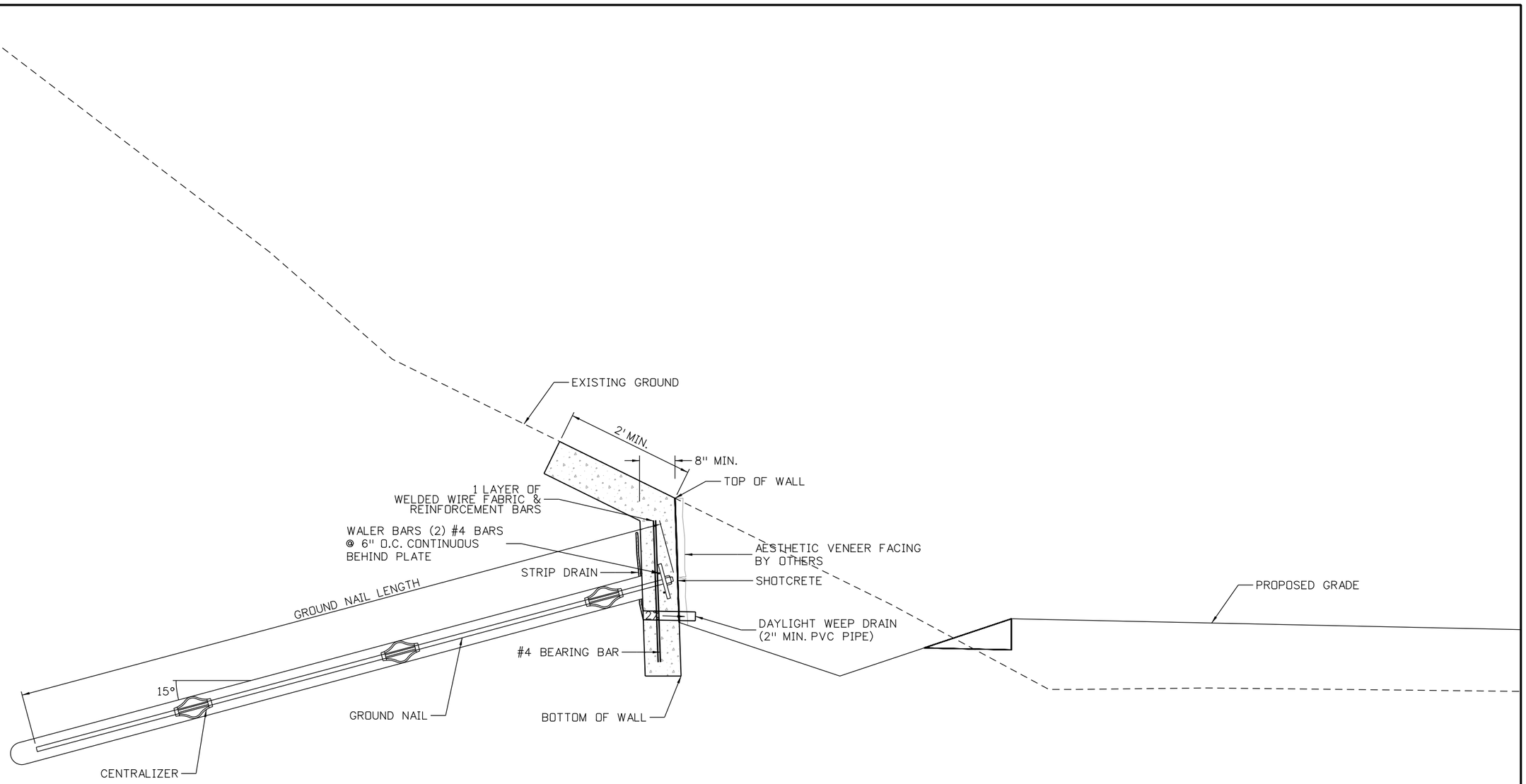

Mike Walz 3:31:50 PM pw:\\DCPWAPP1.bkr.mbakercorp.com:pwprod\Documents\Projects\Lakewood_Office\Boulder_County_Emergency_Transportation\T04\08_Sheet_Files\01_Geotech\DGN\WWG_Typical Section02

Yeh and Associates, Inc.
Consulting Engineers & Scientists

90% SET

CALL UTILITY NOTIFICATION CENTER OF COLORADO
811
CALL 2-BUSINESS DAYS IN ADVANCE BEFORE YOU DIG, GRADE, OR EXCAVATE FOR THE MARKING OF UNDERGROUND MEMBER UTILITIES

REVISIONS:	NO.	DATE	REVISION DESCRIPTION:

Boulder County

BOULDER COUNTY TRANSPORTATION DEPARTMENT
ENGINEERING DIVISION

Michael Baker INTERNATIONAL

DESIGNED:	CAD:	CHECKED:	DATE:
SCS	MJW		

WAGONWHEEL GAP ROAD
GROUND NAIL WALL 2
TYPICAL SECTION

PROJECT NO: 4041.SEPT12C37 | SHEET NO: 153

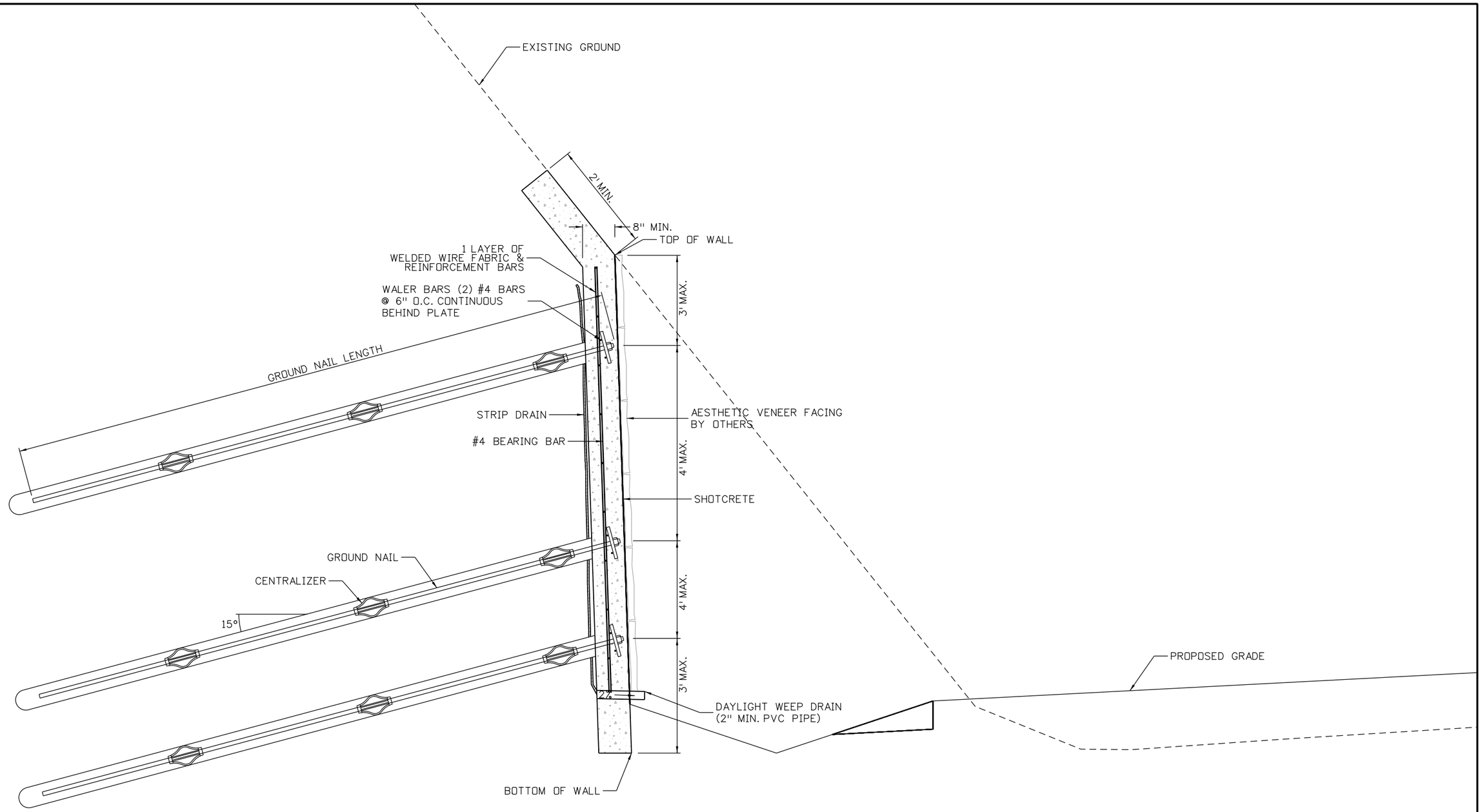

Mike Walz 3:23:42 PM pw:\\DCPWAPP1.bkr.mbakercorp.com:pwprod\Documents\Projects\Lakewood_Office\Boulder_County_Emergency_Transportation\T04\08_Sheet_Files\01_Geotech\DGN\WWG_Typical Section03

Yeh and Associates, Inc.
Consulting Engineers & Scientists

90% SET

CALL UTILITY NOTIFICATION CENTER OF COLORADO
811
CALL 2-BUSINESS DAYS IN ADVANCE BEFORE YOU DIG, GRADE, OR EXCAVATE FOR THE MARKING OF UNDERGROUND MEMBER UTILITIES

REVISIONS:	NO.	DATE	REVISION DESCRIPTION:

Boulder County

BOULDER COUNTY TRANSPORTATION DEPARTMENT
ENGINEERING DIVISION

Michael Baker INTERNATIONAL

DESIGNED:	CAD:	CHECKED:	DATE:
SCS	MJW		

WAGONWHEEL GAP ROAD
GROUND NAIL WALL 3
TYPICAL SECTION

PROJECT NO: 4041.SEPT12C37 | SHEET NO: 154

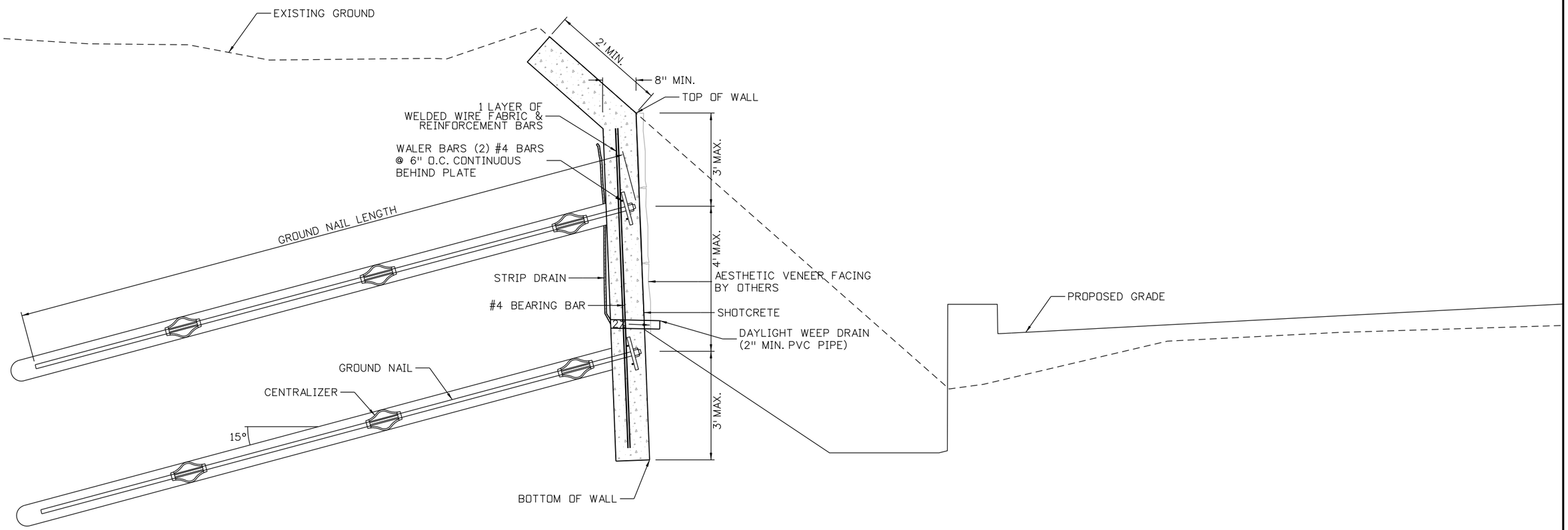

Mike Walz 3:20:50 PM pw:\\DCPWAPP1.bkr.mbakercorp.com:pwprod\Documents\Projects\Lakewood_Office\Boulder_County_Emergency_Transportation\T04\08_Sheet_Files\01_Geotech\DGN\WWG_Typical Section04

Yeh and Associates, Inc.
Consulting Engineers & Scientists

90% SET

CALL UTILITY NOTIFICATION CENTER OF COLORADO
811
CALL 2-BUSINESS DAYS IN ADVANCE BEFORE YOU DIG, GRADE, OR EXCAVATE FOR THE MARKING OF UNDERGROUND MEMBER UTILITIES

REVISIONS:	NO.	DATE	REVISION DESCRIPTION:

Boulder County

BOULDER COUNTY TRANSPORTATION DEPARTMENT
ENGINEERING DIVISION
Michael Baker INTERNATIONAL

DESIGNED:	CAD:	CHECKED:	DATE:
SCS	MJW		

WAGONWHEEL GAP ROAD
GROUND NAIL WALL 4
TYPICAL SECTION

PROJECT NO: 4041.SEPT12C37 | SHEET NO: 155

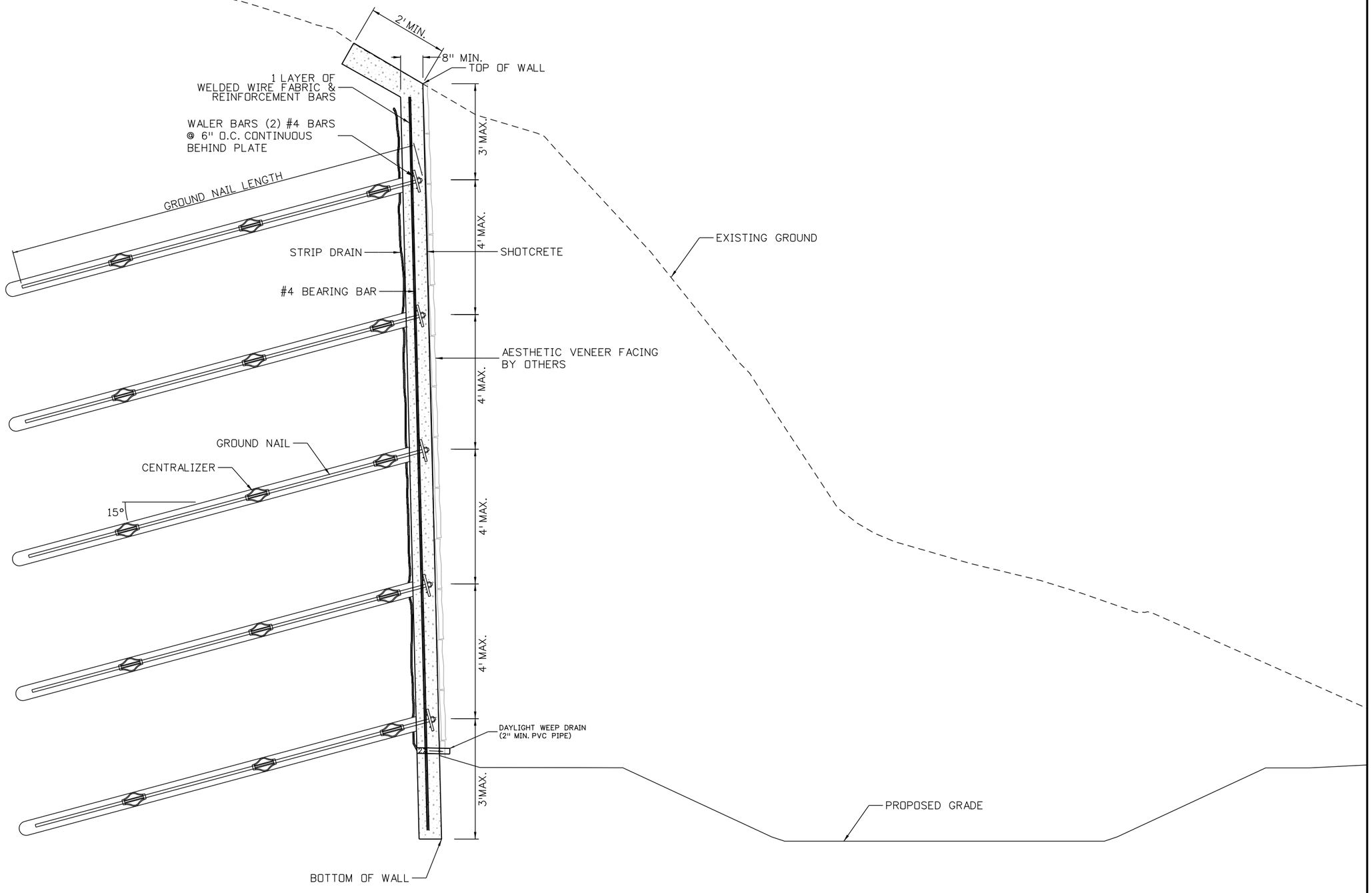

Mike Walz 5:38:36 PM pw:\\DCPWAPP1.bkr.mbakercorp.com:pwprod\Documents\Projects\Lakewood_Office\Boulder_County_Emergency_Transportation\T04\08_Sheet_Files\01_Geotech\DGN\WWG_Typical Section05

Yeh and Associates, Inc.
Consulting Engineers & Scientists

90% SET

CALL UTILITY NOTIFICATION CENTER OF COLORADO
811
CALL 2-BUSINESS DAYS IN ADVANCE BEFORE YOU DIG, GRADE, OR EXCAVATE FOR THE MARKING OF UNDERGROUND MEMBER UTILITIES

REVISIONS:	NO.	DATE	REVISION DESCRIPTION:

Boulder County

BOULDER COUNTY TRANSPORTATION DEPARTMENT
ENGINEERING DIVISION

Michael Baker INTERNATIONAL

DESIGNED:	CAD:	CHECKED:	DATE:
SCS	MJW		

WAGONWHEEL GAP ROAD
GROUND NAIL WALL 6
TYPICAL SECTION

PROJECT NO: 4041.SEPT12C37 | SHEET NO: 156

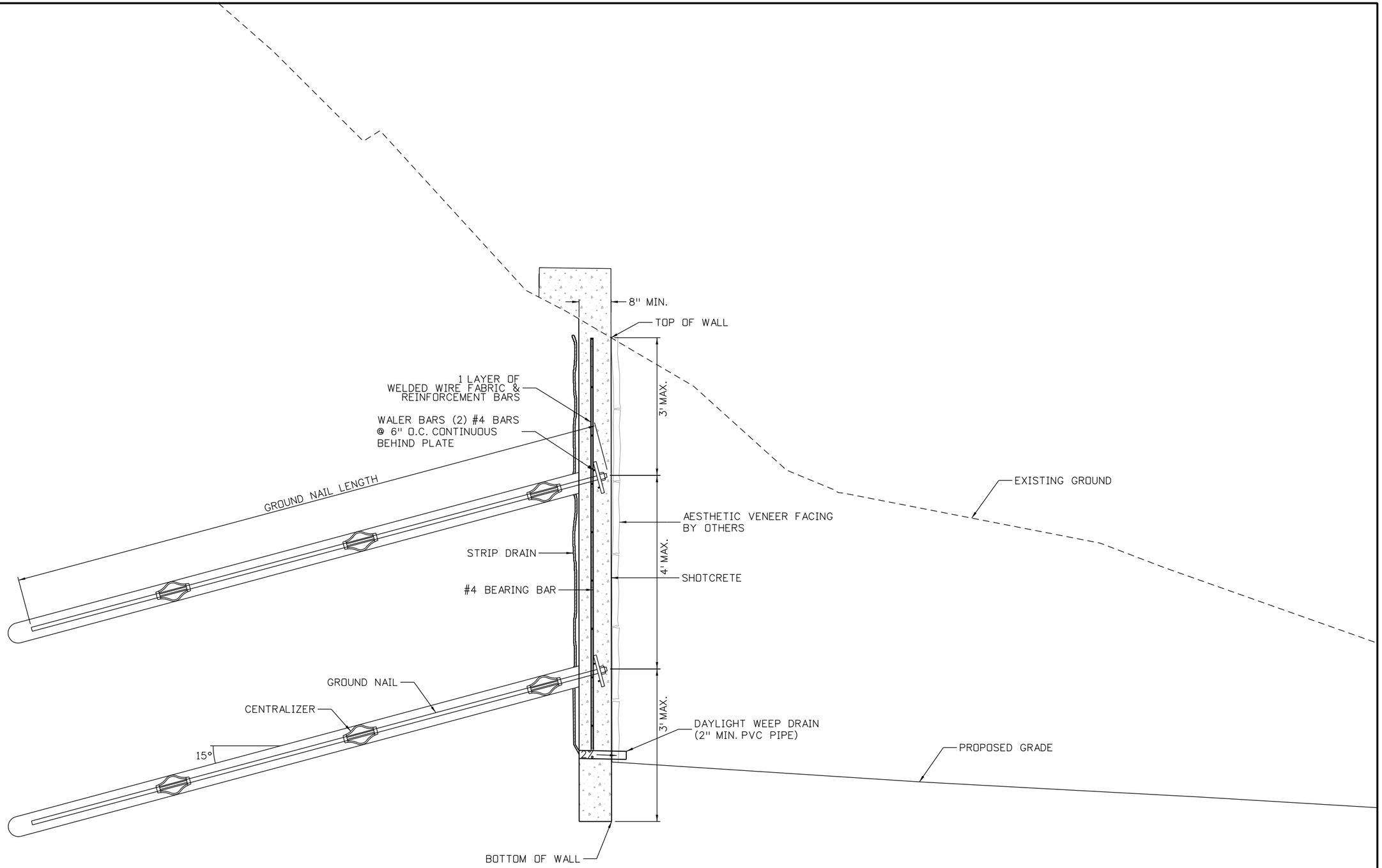

Yeh and Associates, Inc.
Consulting Engineers & Scientists

90% SET

CALL UTILITY NOTIFICATION CENTER OF COLORADO
811
CALL 2-BUSINESS DAYS IN ADVANCE BEFORE YOU DIG, GRADE, OR EXCAVATE FOR THE MARKING OF UNDERGROUND MEMBER UTILITIES

REVISIONS:	NO.	DATE	REVISION DESCRIPTION:

Boulder County

Michael Baker INTERNATIONAL

BOULDER COUNTY TRANSPORTATION DEPARTMENT
ENGINEERING DIVISION

DESIGNED:	CAD:	CHECKED:	DATE:
SCS	MJW		

WAGONWHEEL GAP ROAD
GROUND NAIL WALL 7
TYPICAL SECTION

PROJECT NO: 4041.SEPT12C37 | SHEET NO: 157

Mike Walz 6:05:28 PM pw:\\DCPWAPP1.bkr.mbakercorp.com:pwprod\Documents\Projects\Lakewood_Office\Boulder_County_Emergency_Transportation\T041\08_Sheet_Files\01_Geotech\DGN\WWG_Typical Section06

GROUND NAIL WALL GENERAL NOTES

1.0 GENERAL NOTES

1.1 THE CONTRACTOR SHALL BE RESPONSIBLE FOR THE STABILITY OF STRUCTURES, INCLUDING EXCAVATIONS, DURING CONSTRUCTION.

1.2 ALL REINFORCING STEEL SHALL BE NON-EPOXY COATED UNLESS OTHERWISE NOTED.

1.3 THE MINIMUM LAP SPLICE LENGTH SHALL BE 1'-1" AND PLACED IN ACCORDANCE WITH SUBSECTION 602.06.

1.4 GROUND NAILS - GRADE 75 THREAD BAR OR EQUIVALENT IN ACCORDANCE WITH ASTM A615 AND EPOXY COATED IN ACCORDANCE WITH ASTM A775 AS SHOWN ON THE DRAWINGS.
FY=75,000 PSI

1.5 GROUT - GROUT SHALL BE NEAT-CEMENT OR WITH SAND, WITH TYPE I, TYPE II, OR TYPE III CEMENT IN ACCORDANCE WITH ASTM C150. WATER-CEMENT RATIO SHALL BE BETWEEN 0.4 AND 0.6 AND SHALL DEVELOP THE FOLLOWING STRENGTHS AT THE SPECIFIED CURE PERIODS.
F'C=3,000 PSI MINIMUM (7 DAY STRENGTH)

1.6 END HARDWARE - NUTS AND WASHERS SHALL BE IN ACCORDANCE WITH GROUND NAIL MANUFACTURER'S RECOMMENDATIONS. BEARING PLATE SHALL BE IN ACCORDANCE WITH ASTM A36, GRADE 36. BEARING PLATE, NUTS AND WASHERS SHALL BE EPOXY-COATED.

1.7 SHOTCRETE - PER CDOT STANDARD SPECIFICATIONS SECTION 641 SHOTCRETE.

1.8 UNLESS OTHERWISE NOTED ON THE PLANS, MINIMUM COVER OF SHOTCRETE REINFORCEMENT AND NAIL END HARDWARE SHOULD BE AS FOLLOWS:
FACE EXPOSED TO WEATHER - 2"
FACE EXPOSED TO SOIL - 3"

1.9 WELDED WIRE MESH SHALL BE IN ACCORDANCE WITH ASTM A1064.
FY=65,000 PSI

1.10 WALERS AND VERTICAL BEARING BARS SHALL BE IN ACCORDANCE WITH ASTM A615.
FY=60,000 PSI

1.11 STRIP DRAINS CONSIST OF 12" WIDE DIMPLED CORES WRAPPED IN GEOTEXTILE IN CONFORMANCE WITH SUBSECTION 712.12 GEOCOMPOSITE DRAINS.

1.12 CENTRALIZERS SHALL BE PLASTIC AND ATTACHED TO THE NAILS IN ACCORDANCE WITH THE MANUFACTURER'S RECOMMENDATIONS.

1.13 STATIONS, ELEVATIONS AND DIMENSIONS CONTAINED IN THESE PLANS ARE CALCULATED FROM A RECENT FIELD SURVEY. THE CONTRACTOR SHALL VERIFY ALL DIMENSIONS IN THE FIELD BEFORE ORDERING OR FABRICATING ANY MATERIAL.

2.0 GROUND NAIL WALL CONSTRUCTION SEQUENCE

2.1 EXCAVATE ONE LIFT TO A MAXIMUM DEPTH OF FOUR (4) FEET. BOULDERS, COBBLES AND/OR BEDROCK MAY BE ENCOUNTERED AT ANY DEPTH OF THE EXCAVATION OR DRILLING. IF SLOUGHING GROUND CONDITIONS ARE ENCOUNTERED, GROUND NAILS MAY BE DRILLED AND INSTALLED THROUGH A TEMPORARY STABILIZING BERM AND/OR PLACEMENT OF A SACRIFICIAL REINFORCED SHOTCRETE FLASH COAT MAY BE USED TO TEMPORARILY STABILIZE EXCAVATION PRIOR TO DRILLING GROUND NAILS. CARE SHOULD BE TAKEN DURING EXCAVATION THAT NO GROUND IS LOST FROM BEHIND THE PREVIOUSLY COMPLETED SHOTCRETE. OBSTRUCTIONS INCLUDING BUT NOT LIMITED TO STEEL, PLATING AND CRIBBING SHALL BE ANTICIPATED IN EXCAVATIONS.

2.2 INSTALL GROUND NAILS AT THE SPACINGS AND TO THE LENGTHS SHOWN ON THE PLANS. THE TOP ROW OF GROUND NAILS SHALL BE WITHIN 3 FEET OF THE TOP OF THE WALL. THE BOTTOM ROW OF NAILS SHALL BE WITHIN 3 FEET OF THE BOTTOM OF THE WALL. THE TOLERANCE FOR GROUND NAIL LOCATIONS SHALL BE 6 INCHES. TREMIE THE GROUT FROM THE BOTTOM OF THE HOLE UP.

2.3 INSTALL STRIP DRAINS, WELDED WIRE MESH, WALERS AND VERTICAL BEARING BARS AS SHOWN ON THE DRAWINGS. USE PLASTIC CHAIRS TO HOLD THE REINFORCEMENT AWAY FROM THE SOIL AS NECESSARY.

2.4 INSTALL SHOTCRETE TO THE MINIMUM THICKNESS SHOWN ON THE DRAWINGS AND TO ATTAIN THE MINIMUM COVERAGES SPECIFIED HEREIN. GIVE SPECIAL ATTENTION TO FILLING THE VOID IN THE BORE HOLE ABOVE THE GROUT LINE. COLD WEATHER PROTECTION MEASURES MAY BE NECESSARY.

2.5 INSTALL THE GROUND NAIL END HARDWARE AFTER THE SHOTCRETE HAS BEEN INSTALLED. WHILE THE SHOTCRETE IS STILL WET, EMBED THE PLATE INTO THE SHOTCRETE SURFACE UNTIL THERE IS NO VOID BEHIND THE PLATE. HAND TIGHTEN THE NUT SNUG. APPLY ADDITIONAL SHOTCRETE TO ATTAIN MINIMUM COVERAGE FOR THE GROUND NAIL AND END HARDWARE.

2.0 GROUND NAIL WALL CONSTRUCTION SEQUENCE con't

2.6 ONCE THE GROUT AND SHOTCRETE OF THE CURRENT LIFT HAVE ATTAINED 50% OF THEIR SPECIFIED STRENGTHS, REPEAT CONSTRUCTION SEQUENCE TO THE BOTTOM OF THE WALL.

3.0 GROUND NAIL WALL DESIGN PARAMETERS

3.1 THE GROUND NAIL WALL HAS BEEN DESIGNED IN GENERAL ACCORDANCE WITH PROCEDURES CONTAINED IN THE FWHA "MANUAL FOR DESIGN AND CONSTRUCTION MONITORING OF GROUND NAIL WALLS", REPORT NO. FHWA-SA-96-069R AND AASHTO 2002 STANDARD SPECIFICATIONS FOR HIGHWAY BRIDGES (17TH EDITION).

3.2 THE FOLLOWING VALUES HAVE BEEN USED FOR DESIGN PARAMETERS:

	Ø (DEG)	c (PSF)	γ (PCF)	Qd (lb/ft)
CLAYEY SAND/GRAVEL	32	25	120	1360

Ø ANGLE OF INTERNAL FRICTION
c COHESION
γ UNIT WEIGHT
Q_d DESIGN SHEAR RESISTANCE BOND STRESS (ALLOWABLE)

3.3 GROUNDWATER TABLE ASSUMED TO BE BELOW BASE OF WALL.

4.0 GROUND NAIL WALL SPECIAL NOTES

4.1 THE CONTRACTOR IS RESPONSIBLE FOR FIELD LOCATING ALL NEARBY UTILITIES.

4.2 THE BOND STRENGTHS (Qd) SHOWN ON THE PLANS ARE THE MINIMUM ASSUMED FOR DESIGN.

4.3 GROUND NAIL LENGTHS SHOWN ON THE PLANS ARE THE MINIMUM LENGTHS REQUIRED.

4.4 PRIOR TO BEGINNING EXCAVATION FOR THE GROUND NAIL WALL, THE CONTRACTOR SHALL:

4.4.1 SURVEY THE LAYOUT LINE AND TOP OF WALL LINE.

4.4.2 CONFIRM THE LINES, GRADES, AND EXCAVATION LIMITS SHOWN ON THE PLANS.

4.4.3 THE CONTRACTOR SHALL MODIFY THE PLAN WALL PROFILES USING THE FIELD SURVEY INFORMATION AND SUBMIT TO THE ENGINEER FOR REVIEW AND APPROVAL.

4.5 TOP APPROXIMATELY 18" OF SHOTCRETE FACING SHALL BE REMOVED AFTER WIRE MESH WALL CONSTRUCTION AND PRIOR TO PAVEMENT CONSTRUCTION.

Know what's below.
Call before you dig.

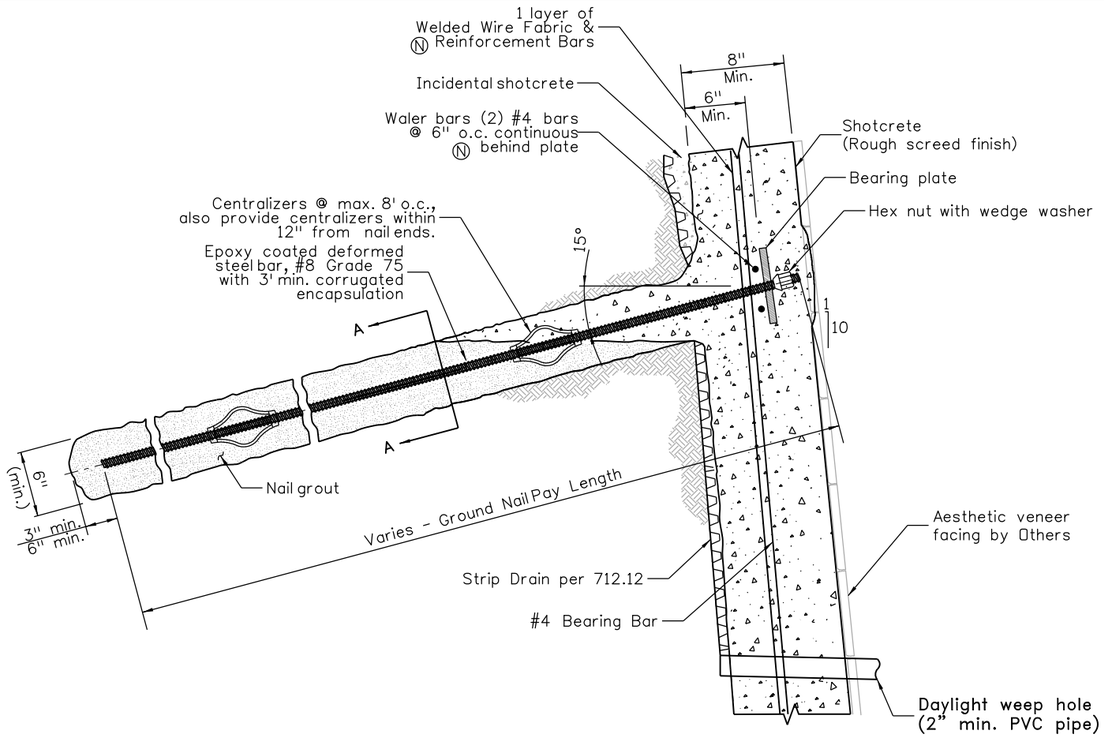

TYPICAL GROUND NAIL DETAIL
NTS

Notes:

1. Reinforcement of the shotcrete facing shall be installed throughout the entire shotcrete facing, including the facing beyond the ground nails.
2. Maximum edge distance of 3 ft for each row of ground nails at end of system.
3. The minimum shotcrete thickness is 8 in. for system face with 4 in. minimum behind the bearing plate.
4. Ⓝ denotes non-coated reinforcing steel.
5. 2" min. cover over nail end and hardware
6. 2" min. cover on all reinforcing exposed to air
7. 3" min. cover on all reinforcing exposed to soil

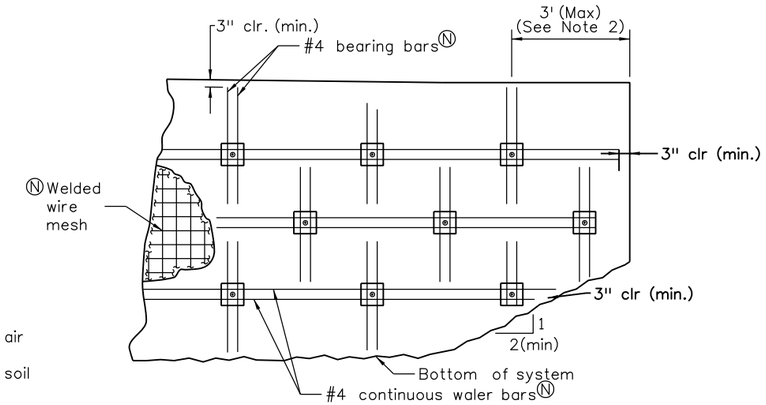

TYPICAL SHOTCRETE FACING REINFORCEMENT - END OF SYSTEM (NOTE 1)
NTS

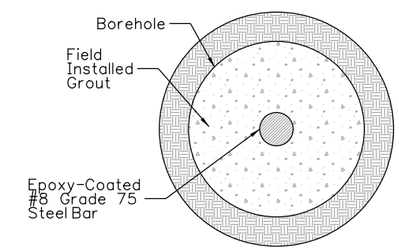

GROUND NAIL CROSS SECTION A-A'
NTS

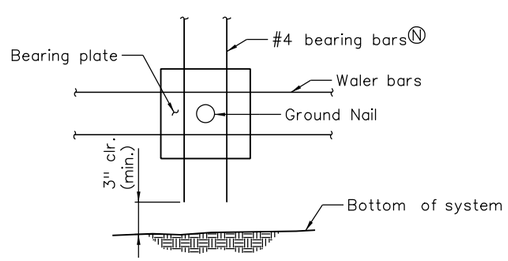

TYPICAL REINFORCEMENT BOTTOM ROW OF GROUND NAILS
NTS

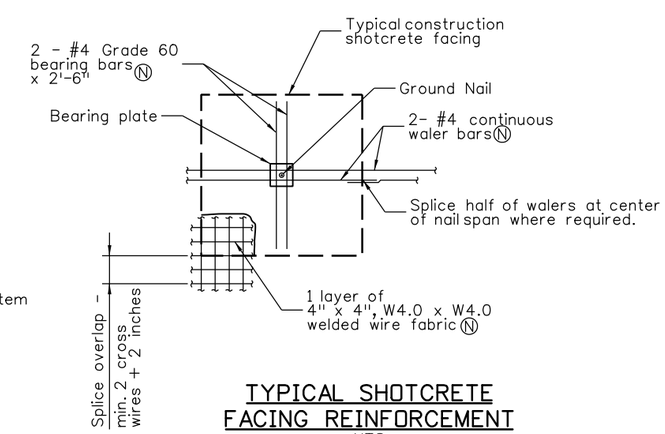

TYPICAL SHOTCRETE FACING REINFORCEMENT
NTS

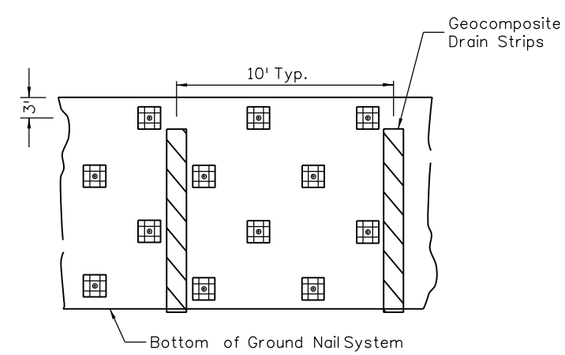

TYPICAL STRIP DRAIN DETAIL
NTS

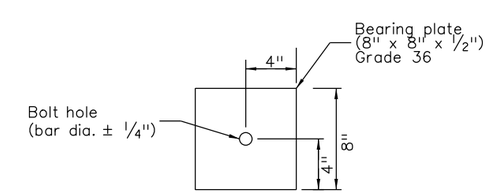

BEARING PLATE DETAIL
NTS

Yeh and Associates, Inc.
Consulting Engineers & Scientists

90% SET

CALL UTILITY NOTIFICATION CENTER OF COLORADO
811
CALL 2-BUSINESS DAYS IN ADVANCE BEFORE YOU DIG, GRADE, OR EXCAVATE FOR THE MARKING OF UNDERGROUND MEMBER UTILITIES

REVISIONS:	NO.	DATE	REVISION DESCRIPTION:

Boulder County
Michael Baker INTERNATIONAL

BOULDER COUNTY TRANSPORTATION DEPARTMENT
ENGINEERING DIVISION

DESIGNED:	CAD:	CHECKED:	DATE:
SCS	MJW		

WAGONWHEEL GAP ROAD
GROUND NAIL WALL DETAILS

PROJECT NO: 4041.SEPT12C37 | SHEET NO: 159

Mike Walz 3:45:19 PM pw:\\DCPWAPP1.bkr.mbakercorp.com:pwprod\Documents\Projects\Lakewood_Office\Boulder_County_Emergency_Transportation\T041\08_Sheet_Files\01_Geotech\DGN\Wagon_Wheel_Gap_GNW Details01.dgn

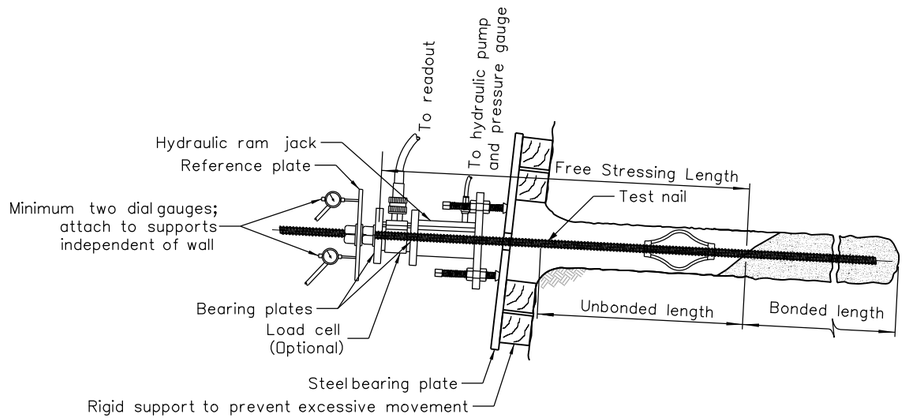

TYPICAL GROUND NAIL TEST SETUP

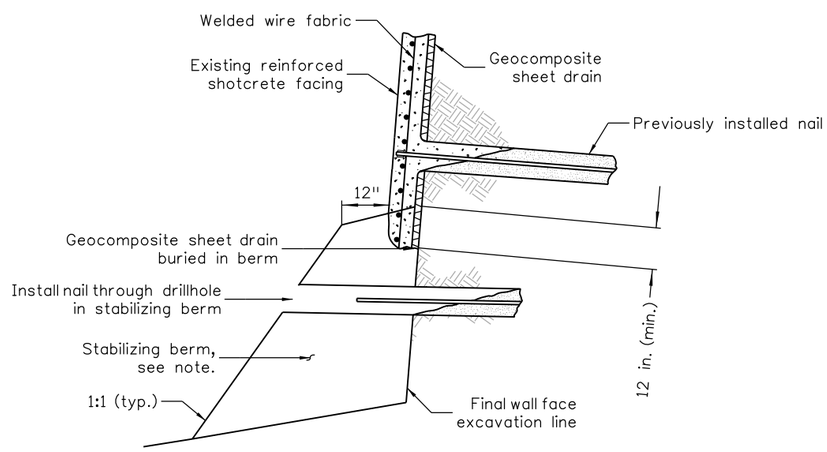

NAIL INSTALLATION THROUGH TEMPORARY STABILIZING BERM

(USE IN CASE OF SLOUGHING GROUND)

Note:
Excavate stabilizing berm to final wall face excavation line for shotcrete placement. Contractor shall carefully excavate stabilizing berm to avoid hitting ground nails buried in the berm.

GROUND NAIL TESTING NOTES:

1. See specifications for verification and proof test nail requirements,
2. Required ground nail allowable pullout resistance:
3. The test support system (eg. cribbing, chairs, bearing plates, etc.) shall be sufficient to complete the test without excessive deflection or bearing failure.
4. A minimum of 1 sacrificial verification test is required for each ground nail wall. Additional verification tests may be required by the Engineer if ground conditions or construction methods change.
5. A minimum of 5% of the ground nails shall be proof-tested at each wall location.

Mike Walz 3:47:08 PM pw:\\DCPWAPP1.bkr.mbakercorp.com:pwprod\Documents\Projects\Lakewood_Office\Boulder_County_Emergency_Transportation\T04\08_Sheet_Files\01_Geotech\DGN\Wagon_Wheel_Gap_GNW Testing and Const.dgn