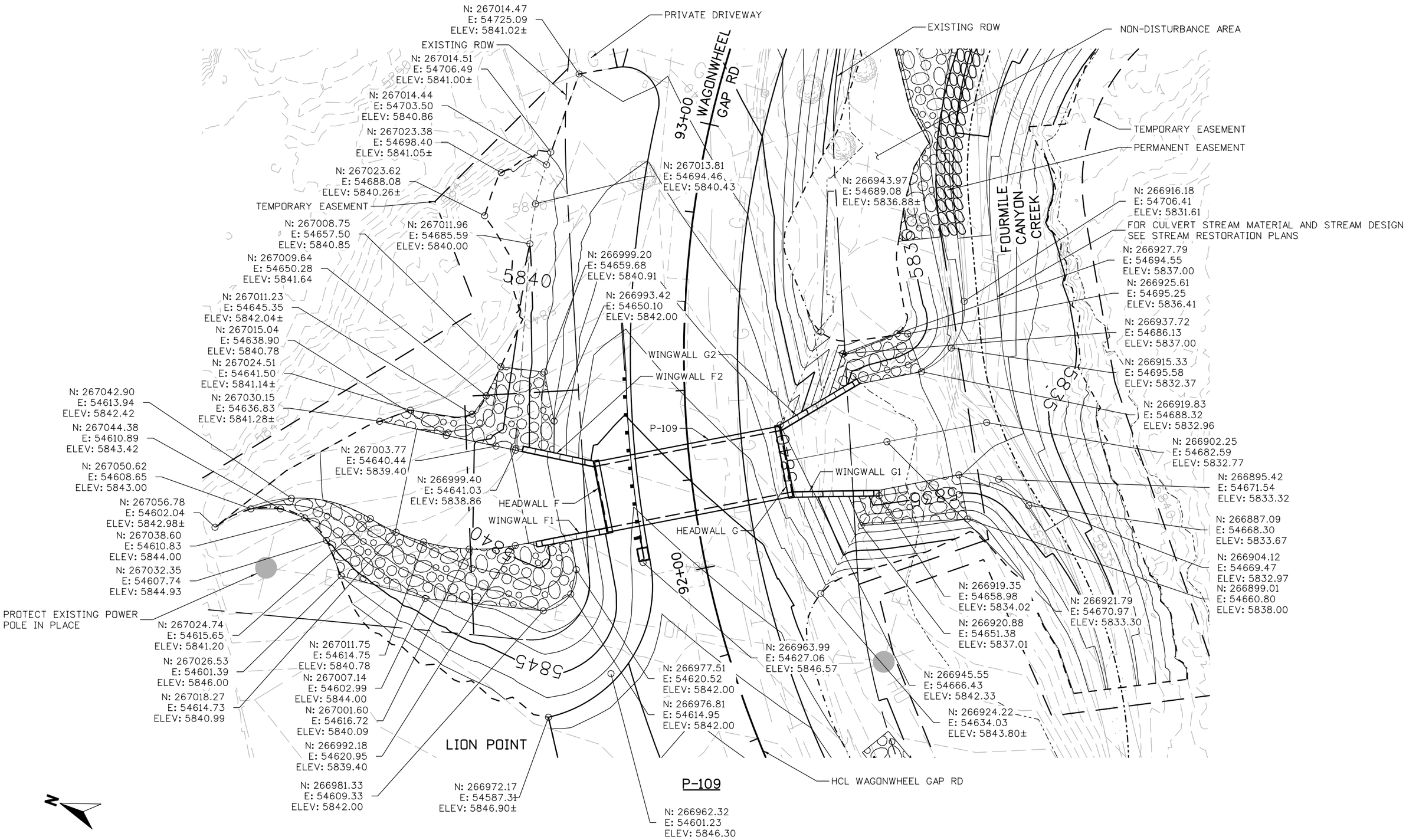

edgar.robles 6:56:39 PM 11/4/2016 pw:\\DCPWAPP1.bkr.mbakercorp.com:pwprod\Documents\Projects\Lakewood_Office\Boulder_County_Emergency_Transportation\T04\08_Sheet_Files\02_Hydraulics\DGN\Wagon_Wheel_Gap_Hydr11.dgn

100% SET

CALL UTILITY NOTIFICATION CENTER OF COLORADO
CALL 2-BUSINESS DAYS IN ADVANCE BEFORE YOU DIG, GRADE, OR EXCAVATE FOR THE MARKING OF UNDERGROUND MEMBER UTILITIES

REVISIONS: NO.	DATE	REVISION DESCRIPTION:

Michael Baker INTERNATIONAL

BOULDER COUNTY TRANSPORTATION DEPARTMENT
ENGINEERING DIVISION

DESIGNED:	CAD:	CHECKED:	DATE:
SLS	EMR	JPZ	11/04/16

WAGONWHEEL GAP ROAD
LION POINT GRADING PLAN
P-109

PROJECT NO: 4043.SEPT12C34 SHEET NO: 83

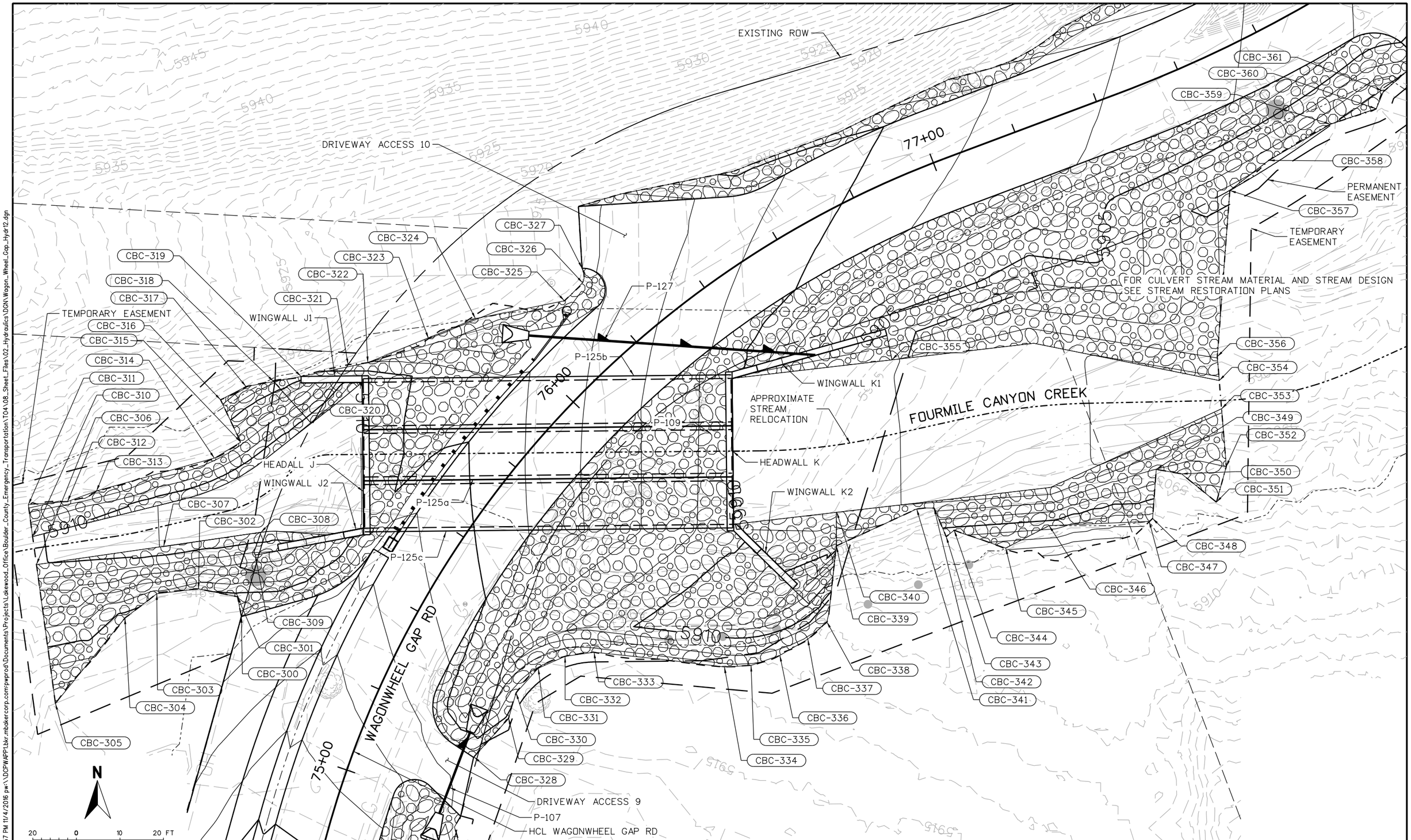

edgar.robles 6:56:57 PM 11/4/2016 pw:\\DCPWAPP1.bkr.mbakercorp.com:pwprod\Documents\Projects\Lakewood_Office\Boulder_County_Emergency_Transportation\T04\08_Sheet_Files\02_Hydraulics\DGN\Wagon_Wheel_Gap_Hydr12.dgn

100% SET

CALL UTILITY NOTIFICATION CENTER OF COLORADO

811

CALL 2-BUSINESS DAYS IN ADVANCE BEFORE YOU DIG, GRADE, OR EXCAVATE FOR THE MARKING OF UNDERGROUND MEMBER UTILITIES

REVISIONS:	NO.	DATE	REVISION DESCRIPTION:

Boulder County

BOULDER COUNTY TRANSPORTATION DEPARTMENT
ENGINEERING DIVISION

Michael Baker INTERNATIONAL

DESIGNED:	CAD:	CHECKED:	DATE:
EMR	EMR	SLS	11/04/16

WAGONWHEEL GAP ROAD
P-125 GRADING PLAN
P-125

PROJECT NO: 4043.SEPT12C34 | SHEET NO: 84

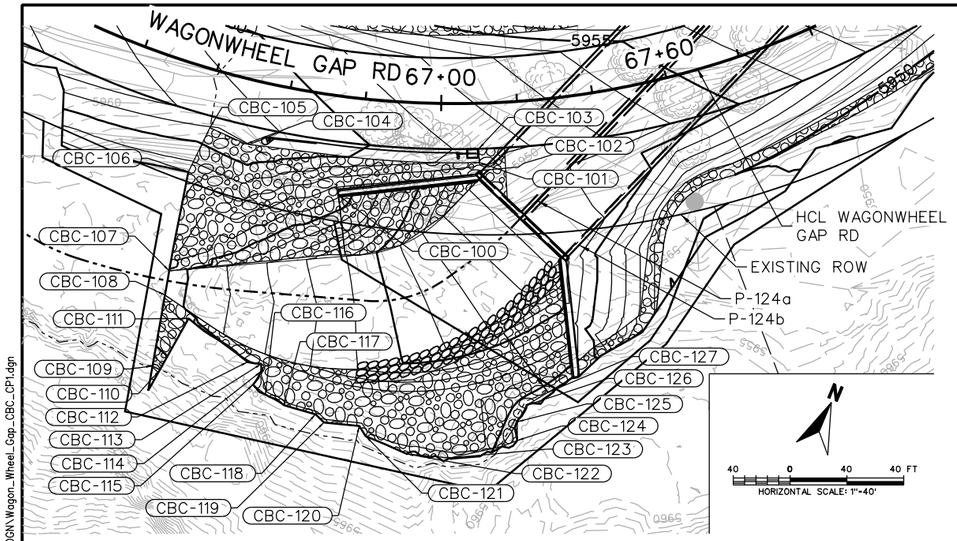

RIPRAP POINT TABLE - P-124

PT #	ALGINMENT	STATION	OFFSET	ELEV.	DESC.
CBC-100	WAGONWHEEL GAP RD	66+75.92	26.08' RT	5957.07	WINGWALL H1
CBC-101	WAGONWHEEL GAP RD	67+09.63	15.63' RT	5958.45	GUARDRAIL
CBC-102	WAGONWHEEL GAP RD	67+16.07	12.00' RT	5958.33	GUARDRAIL
CBC-103	WAGONWHEEL GAP RD	67+09.63	11.96' RT	5958.67	GUARDRAIL
CBC-104	WAGONWHEEL GAP RD	66+51.77	16.88' RT	5960.96	GUARDRAIL
CBC-105	WAGONWHEEL GAP RD	66+42.13	15.06' RT	5960.92	GUARDRAIL
CBC-106	WAGONWHEEL GAP RD	66+40.00	27.82' RT	5958.42	EDGE OF RIPRAP
CBC-107	WAGONWHEEL GAP RD	66+41.81	54.33' RT	5955.45	EDGE OF RIPRAP
CBC-108	WAGONWHEEL GAP RD	66+42.29	60.80' RT	5955.45	EDGE OF RIPRAP
CBC-109	WAGONWHEEL GAP RD	66+43.58	79.75' RT	5961.91	EDGE OF RIPRAP
CBC-110	WAGONWHEEL GAP RD	66+45.17	80.18' RT	5961.66	EDGE OF RIPRAP
CBC-111	WAGONWHEEL GAP RD	66+48.24	65.20' RT	5955.37	EDGE OF RIPRAP
CBC-112	WAGONWHEEL GAP RD	66+61.81	73.22' RT	5955.17	EDGE OF RIPRAP
CBC-113	WAGONWHEEL GAP RD	66+64.64	73.02' RT	5954.35	EDGE OF RIPRAP
CBC-114	WAGONWHEEL GAP RD	66+64.84	74.98' RT	5954.05	EDGE OF RIPRAP
CBC-115	WAGONWHEEL GAP RD	66+63.67	78.88' RT	5954.00	EDGE OF RIPRAP
CBC-116	WAGONWHEEL GAP RD	66+66.42	80.85' RT	5954.00	EDGE OF RIPRAP
CBC-117	WAGONWHEEL GAP RD	66+70.30	82.87' RT	5954.00	EDGE OF RIPRAP
CBC-118	WAGONWHEEL GAP RD	66+76.59	84.18' RT	5954.00	EDGE OF RIPRAP
CBC-119	WAGONWHEEL GAP RD	66+78.40	86.02' RT	5954.00	EDGE OF RIPRAP
CBC-120	WAGONWHEEL GAP RD	66+85.21	86.12' RT	5954.00	EDGE OF RIPRAP
CBC-121	WAGONWHEEL GAP RD	66+86.57	88.64' RT	5954.00	EDGE OF RIPRAP
CBC-122	WAGONWHEEL GAP RD	66+94.60	92.77' RT	5954.00	EDGE OF RIPRAP
CBC-123	WAGONWHEEL GAP RD	67+02.68	93.56' RT	5954.00	EDGE OF RIPRAP
CBC-124	WAGONWHEEL GAP RD	67+15.52	89.37' RT	5956.00	EDGE OF RIPRAP
CBC-125	WAGONWHEEL GAP RD	67+15.69	84.43' RT	5956.00	EDGE OF RIPRAP
CBC-126	WAGONWHEEL GAP RD	67+17.71	80.16' RT	5956.00	EDGE OF RIPRAP
CBC-127	WAGONWHEEL GAP RD	67+22.10	77.20' RT	5955.76	EDGE OF RIPRAP
CBC-128	WAGONWHEEL GAP RD	67+13.81	60.87' RT	5949.15	EDGE OF RIPRAP

RIPRAP POINT TABLE - P-132

PT #	ALGINMENT	STATION	OFFSET	ELEV.	DESC.
CBC-200	WAGONWHEEL GAP RD	96+37.91	69.64' RT	5828.20	EDGE OF RIPRAP
CBC-201	WAGONWHEEL GAP RD	96+34.98	68.17' RT	5827.81	EDGE OF RIPRAP
CBC-202	WAGONWHEEL GAP RD	96+28.00	67.36' RT	5827.67	EDGE OF RIPRAP
CBC-203	WAGONWHEEL GAP RD	96+26.55	67.49' RT	5827.74	EDGE OF RIPRAP
CBC-204	WAGONWHEEL GAP RD	96+23.73	68.18' RT	5828.00	EDGE OF RIPRAP
CBC-205	WAGONWHEEL GAP RD	96+17.37	69.29' RT	5828.00	EDGE OF RIPRAP
CBC-206	WAGONWHEEL GAP RD	96+12.53	70.97' RT	5828.04	EDGE OF RIPRAP
CBC-207	WAGONWHEEL GAP RD	96+02.89	53.53' RT	5819.13	EDGE OF RIPRAP
CBC-208	WAGONWHEEL GAP RD	96+36.02	37.16' RT	5817.57	EDGE OF RIPRAP
CBC-209	WAGONWHEEL GAP RD	96+36.15	13.64' RT	5826.49	EDGE OF RIPRAP
CBC-210	WAGONWHEEL GAP RD	96+72.96	13.63' RT	5826.12	EDGE OF RIPRAP
CBC-211	WAGONWHEEL GAP RD	96+73.27	20.14' RT	5823.44	EDGE OF RIPRAP

100% SET

CALL UTILITY NOTIFICATION CENTER OF COLORADO
811
CALL 2-BUSINESS DAYS IN ADVANCE BEFORE YOU DIG, GRADE, OR EXCAVATE FOR THE MARKING OF UNDERGROUND MEMBER UTILITIES

REVISIONS: NO.	DATE	REVISION DESCRIPTION:

BOULDER COUNTY TRANSPORTATION DEPARTMENT
ENGINEERING DIVISION
Boulder County
Michael Baker INTERNATIONAL

DESIGNED:	CAD:	CHECKED:	DATE:
EMR	EMR	JPZ	11/04/16

WAGONWHEEL GAP ROAD
CBC CONTROL POINTS (SHEET 1 OF 2)

PROJECT NO:
SHEET NO: 85

edgar.robles 6:57:16 PM 11/4/2016 pw:\\DCPWAPP1.bkr.mbakercorp.com:pwprod\Documents\Projects\Lakewood_Office\Boulder_County_Emergency_Transportation\T04\08_Sheet_Files\02_Hydraulics\DGN\Wagon_Wheel_Gap_CBC_CP1.dgn

RIPRAP POINT TABLE - P-125

PT #	ALGINMENT	STATION	OFFSET	ELEV.	DESC.
CBC-300	WAGONWHEEL GAP RD	75+21.98	35.64' LT	5916.14	SOUTHWEST EDGE OF RIPRAP
CBC-301	WAGONWHEEL GAP RD	75+25.21	38.39' LT	5915.39	SOUTHWEST EDGE OF RIPRAP
CBC-302	WAGONWHEEL GAP RD	75+23.38	47.24' LT	5914.75	SOUTHWEST EDGE OF RIPRAP
CBC-303	WAGONWHEEL GAP RD	75+19.28	55.50' LT	5914.37	SOUTHWEST EDGE OF RIPRAP
CBC-304	WAGONWHEEL GAP RD	75+12.89	60.04' LT	5915.48	SOUTHWEST EDGE OF RIPRAP
CBC-305	WAGONWHEEL GAP RD	74+94.19	68.29' LT	5917.97	SOUTHWEST EDGE OF RIPRAP
CBC-306	WAGONWHEEL GAP RD	75+15.54	83.50' LT	5910.10	SOUTHWEST EDGE OF RIPRAP
CBC-307	WAGONWHEEL GAP RD	75+27.74	58.69' LT	5908.96	SOUTHWEST EDGE OF RIPRAP
CBC-308	WAGONWHEEL GAP RD	75+38.53	40.34' LT	5909.01	SOUTHWEST EDGE OF RIPRAP
CBC-309	WAGONWHEEL GAP RD	75+34.11	39.00' LT	5911.25	NORTHWEST EDGE OF RIPRAP
CBC-310	WAGONWHEEL GAP RD	75+19.60	86.88' LT	5910.10	NORTHWEST EDGE OF RIPRAP
CBC-311	WAGONWHEEL GAP RD	75+24.11	90.81' LT	5913.78	NORTHWEST EDGE OF RIPRAP
CBC-312	WAGONWHEEL GAP RD	75+27.40	83.03' LT	5912.53	NORTHWEST EDGE OF RIPRAP
CBC-313	WAGONWHEEL GAP RD	75+31.18	78.14' LT	5913.00	NORTHWEST EDGE OF RIPRAP
CBC-314	WAGONWHEEL GAP RD	75+46.36	58.06' LT	5912.24	NORTHWEST EDGE OF RIPRAP
CBC-315	WAGONWHEEL GAP RD	75+51.43	54.81' LT	5912.26	NORTHWEST EDGE OF RIPRAP
CBC-316	WAGONWHEEL GAP RD	75+55.97	63.93' LT	5917.55	NORTHWEST EDGE OF RIPRAP
CBC-317	WAGONWHEEL GAP RD	75+60.51	60.76' LT	5917.10	NORTHWEST EDGE OF RIPRAP
CBC-318	WAGONWHEEL GAP RD	75+64.13	56.21' LT	5916.18	NORTHWEST EDGE OF RIPRAP
CBC-319	WAGONWHEEL GAP RD	75+67.88	51.76' LT	5915.53	NORTHWEST EDGE OF RIPRAP
CBC-320	WAGONWHEEL GAP RD	75+61.73	43.63' LT	5908.87	NORTHWEST EDGE OF RIPRAP
CBC-321	WAGONWHEEL GAP RD	75+75.04	44.75' LT	5914.33	NORTHWEST EDGE OF RIPRAP
CBC-322	WAGONWHEEL GAP RD	75+77.69	41.48' LT	5914.09	NORTHWEST EDGE OF RIPRAP
CBC-323	WAGONWHEEL GAP RD	75+89.03	34.34' LT	5914.02	NORTHWEST EDGE OF RIPRAP
CBC-324	WAGONWHEEL GAP RD	75+98.37	29.47' LT	5914.12	NORTHWEST EDGE OF RIPRAP
CBC-325	WAGONWHEEL GAP RD	76+14.19	18.08' LT	5912.71	NORTHWEST EDGE OF RIPRAP
CBC-326	WAGONWHEEL GAP RD	76+19.63	18.37' LT	5912.76	NORTHWEST EDGE OF RIPRAP
CBC-327	WAGONWHEEL GAP RD	76+21.56	20.96' LT	5913.01	NORTHWEST EDGE OF RIPRAP
CBC-328	WAGONWHEEL GAP RD	75+14.04	26.19' RT	5916.38	SOUTHEAST EDGE OF RIPRAP
CBC-329	WAGONWHEEL GAP RD	75+26.96	29.79' RT	5915.31	SOUTHEAST EDGE OF RIPRAP
CBC-330	WAGONWHEEL GAP RD	75+33.81	28.71' RT	5914.58	SOUTHEAST EDGE OF RIPRAP
CBC-331	WAGONWHEEL GAP RD	75+42.31	30.46' RT	5914.10	SOUTHEAST EDGE OF RIPRAP

RIPRAP POINT TABLE - P-125

PT #	ALGINMENT	STATION	OFFSET	ELEV.	DESC.
CBC-332	WAGONWHEEL GAP RD	75+48.68	34.38' RT	5913.88	SOUTHEAST EDGE OF RIPRAP
CBC-333	WAGONWHEEL GAP RD	75+53.81	39.51' RT	5913.49	SOUTHEAST EDGE OF RIPRAP
CBC-334	WAGONWHEEL GAP RD	75+72.38	66.03' RT	5913.40	SOUTHEAST EDGE OF RIPRAP
CBC-335	WAGONWHEEL GAP RD	75+78.12	70.64' RT	5913.20	SOUTHEAST EDGE OF RIPRAP
CBC-336	WAGONWHEEL GAP RD	75+86.86	74.26' RT	5912.68	SOUTHEAST EDGE OF RIPRAP
CBC-337	WAGONWHEEL GAP RD	75+97.31	76.54' RT	5912.28	SOUTHEAST EDGE OF RIPRAP
CBC-338	WAGONWHEEL GAP RD	76+06.17	76.88' RT	5911.92	SOUTHEAST EDGE OF RIPRAP
CBC-339	WAGONWHEEL GAP RD	76+25.36	65.39' RT	5904.10	SOUTHEAST EDGE OF RIPRAP
CBC-340	WAGONWHEEL GAP RD	76+32.18	59.35' RT	5902.34	SOUTHEAST EDGE OF RIPRAP
CBC-341	WAGONWHEEL GAP RD	76+53.49	69.45' RT	5902.60	SOUTHEAST EDGE OF RIPRAP
CBC-342	WAGONWHEEL GAP RD	76+58.53	71.40' RT	5902.64	SOUTHEAST EDGE OF RIPRAP
CBC-343	WAGONWHEEL GAP RD	76+56.92	78.45' RT	5906.01	SOUTHEAST EDGE OF RIPRAP
CBC-344	WAGONWHEEL GAP RD	76+60.47	78.14' RT	5905.34	SOUTHEAST EDGE OF RIPRAP
CBC-345	WAGONWHEEL GAP RD	76+73.41	87.52' RT	5907.79	SOUTHEAST EDGE OF RIPRAP
CBC-346	WAGONWHEEL GAP RD	76+91.38	87.18' RT	5905.58	SOUTHEAST EDGE OF RIPRAP
CBC-347	WAGONWHEEL GAP RD	77+17.46	94.52' RT	5906.60	SOUTHEAST EDGE OF RIPRAP
CBC-348	WAGONWHEEL GAP RD	77+18.42	94.16' RT	5906.35	SOUTHEAST EDGE OF RIPRAP
CBC-349	WAGONWHEEL GAP RD	77+23.18	83.88' RT	5903.02	SOUTHEAST EDGE OF RIPRAP
CBC-350	WAGONWHEEL GAP RD	77+28.25	86.88' RT	5903.52	SOUTHEAST EDGE OF RIPRAP
CBC-351	WAGONWHEEL GAP RD	77+33.46	95.78' RT	5904.73	SOUTHEAST EDGE OF RIPRAP
CBC-352	WAGONWHEEL GAP RD	77+38.46	88.90' RT	5902.99	SOUTHEAST EDGE OF RIPRAP
CBC-353	WAGONWHEEL GAP RD	77+42.10	76.12' RT	5900.31	SOUTHEAST EDGE OF RIPRAP
CBC-354	WAGONWHEEL GAP RD	77+43.88	69.87' RT	5900.31	NORTEAST EDGE OF RIPRAP
CBC-355	WAGONWHEEL GAP RD	76+69.87	37.08' RT	5902.01	NORTEAST EDGE OF RIPRAP
CBC-356	WAGONWHEEL GAP RD	77+45.38	64.58' RT	5902.11	NORTEAST EDGE OF RIPRAP
CBC-357	WAGONWHEEL GAP RD	77+60.00	30.26' RT	5901.67	NORTEAST EDGE OF RIPRAP
CBC-358	WAGONWHEEL GAP RD	77+70.00	27.64' RT	5902.24	NORTEAST EDGE OF RIPRAP
CBC-359	WAGONWHEEL GAP RD	77+85.00	26.61' RT	5902.10	NORTEAST EDGE OF RIPRAP
CBC-360	WAGONWHEEL GAP RD	77+95.00	28.63' RT	5901.08	NORTEAST EDGE OF RIPRAP
CBC-361	WAGONWHEEL GAP RD	77+98.06	25.80' RT	5901.92	NORTEAST EDGE OF RIPRAP
CBC-362	WAGONWHEEL GAP RD	78+07.65	24.37' RT	5904.48	NORTEAST EDGE OF RIPRAP

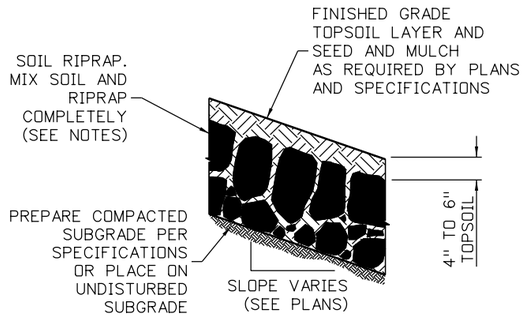

NOTES:

1. SOIL RIPRAP AND RIPRAP DETAILS ARE APPLICABLE TO SLOPED AREAS. REFER TO THE DRAINAGE PLANS FOR ACTUAL LOCATIONS AND LIMITS.
2. MIX UNIFORMLY 65% RIPRAP BY VOLUME WITH 35% OF APPROVED SOIL OR GRAVEL BY VOLUME PRIOR TO PLACEMENT.
3. PLACE SOIL RIPRAP OR RIPRAP MIX TO RESULT IN SECURELY INTERLOCKED ROCK AT THE DESIGN THICKNESS AND GRADE. COMPACT AND LEVEL TO ELIMINATE ALL VOIDS AND ROCKS PROJECTING ABOVE DESIGN RIPRAP TOP GRADE.
4. CRIMP OR TACKIFY MULCH ON SOIL RIPRAP OR AS CALLED FOR IN THE PLANS AND SPECIFICATIONS.
5. SEE STORMWATER MANAGEMENT PLAN FOR SEEDING MIXTURE AND DETAILS.
6. BENCH RIPRAP AS NECESSARY TO MATCH EXISTING GRADE AND PLACE STONE-SOIL OR STONE-GRAVEL MIX TO RESULT IN SECURELY INTERLOCKED ROCK AT THE DESIGN THICKNESS AND GRADE. COMPACT AND LEVEL TO ELIMINATE ALL VOIDS AND ROCKS PROJECTING ABOVE FINISHED GRADE.

SOIL RIPRAP WITH MULCH

NOT TO SCALE

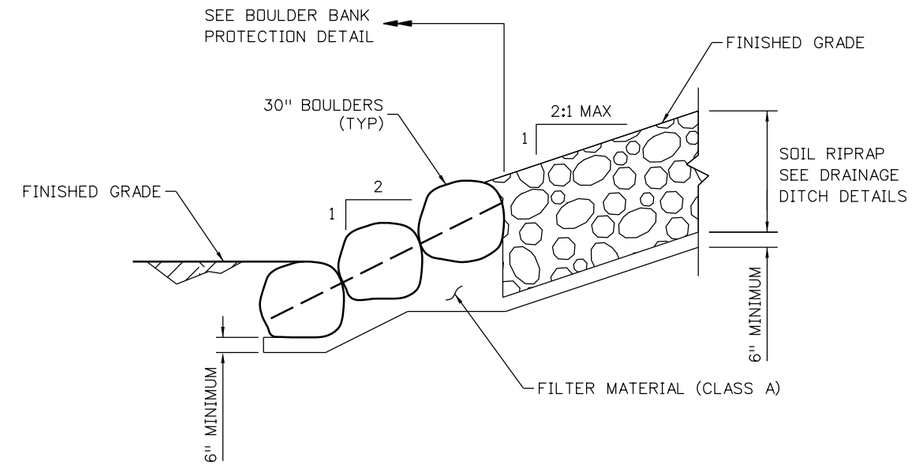

RIPRAP BANK PROTECTION

NTS

NOTES:

1. SEE ROADWAY PLAN SHEETS FOR LIMITS OF RIPRAP.
2. BOULDERS PLACED WITHIN THE RIPRAP BANK PROTECTIONS LIMITS SHALL HAVE A MINIMUM OF 6 INCHES OF FILTER MATERIAL (CLASS A) BENEATH THE 30" BOULDERS IN ADDITION TO THE BOULDER BOULDER BANK PROTECTION DETAIL SPECIFICATIONS.
3. BOULDER INSTALLATION SHOWN IS FOR WITHIN THE LIMITS OF RIPRAP ONLY. BOULDERS PLACED OUTSIDE OF THE PROVIDED RIPRAP LIMITS SHALL CONFORM TO THE DETAIL PROVIDED UNDER STREAM RESTORATION REFERRED TO AS BOULDER BANK PROTECTION.

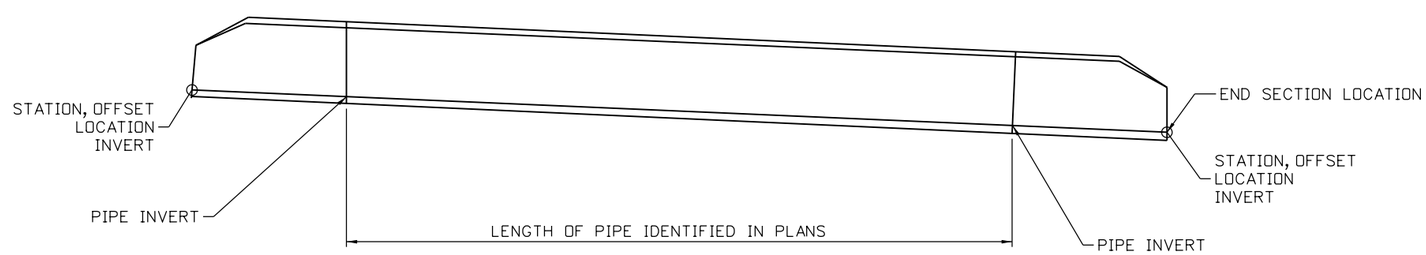

CULVERT TYPICAL

NOT TO SCALE

NOTES:

FLOW DIRECTION MAY VARY.
SEE DRAINAGE PLANS

100% SET

CALL UTILITY NOTIFICATION CENTER OF COLORADO
811
CALL 2-BUSINESS DAYS IN ADVANCE BEFORE YOU DIG, GRADE, OR EXCAVATE FOR THE MARKING OF UNDERGROUND MEMBER UTILITIES

REVISIONS:	NO.	DATE	REVISION DESCRIPTION:

Boulder County
Michael Baker INTERNATIONAL

BOULDER COUNTY TRANSPORTATION DEPARTMENT
ENGINEERING DIVISION

DESIGNED:	CAD:	CHECKED:	DATE:
JAM	MEM	JPZ	11/04/16

WAGON WHEEL GAP ROAD
DRAINAGE DETAILS (SHEET 1 OF 3)

PROJECT NO: 4043.SEPT12C34 | SHEET NO: 87

edgar.robles 6:57:51 PM 11/4/2016 pw:\\DCPWAPP1.bkr.mbakercorp.com:pwprod\Documents\Projects\Lakewood_Office\Boulder_County_Emergency_Transportation\T04\08_Sheet_Files\02_Hydraulics\DGN\Wagon_Wheel_Gap_Hydr_Det01.dgn

NOTES:

1. REFER TO RIPRAP INLET/OUTLET TABLE FOR RIPRAP SIZING, DIMENSIONS, AND BEDDING REQUIREMENTS.
2. FOR AREAS WITH SOIL RIPRAP, 6 INCHES OF TOPSOIL IS REQUIRED ABOVE SOIL RIPRAP. ELEVATIONS PROVIDED ARE FOR FINAL GRADE. SEE SOIL RIPRAP WITH MULCH DETAIL FOR MORE INFORMATION.
3. FOR GEOMETRY PLACEMENT INFORMATION FOR A RIPRAP PAD REFER TO THE PIPE CULVERT HEADWALL DATA TABLE ON THE CULVERT HEADWALL DETAILS SHEET.

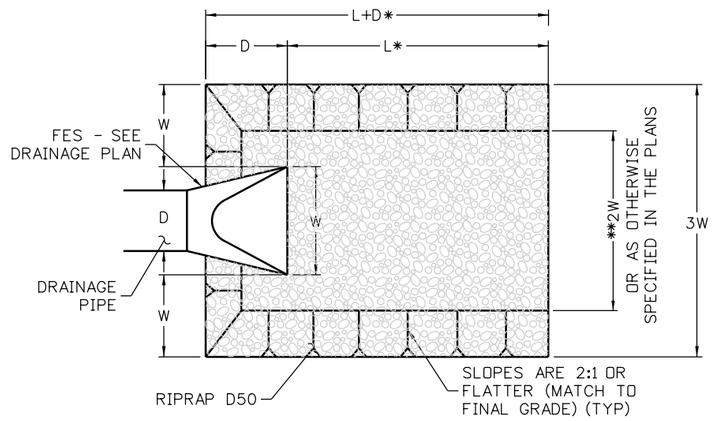

* 3D < L < 10D (SEE TABLE)
** EQUALS CHANNEL WIDTH FOR PIPE INLETS

INLET/OUTLET PROTECTION
NOT TO SCALE

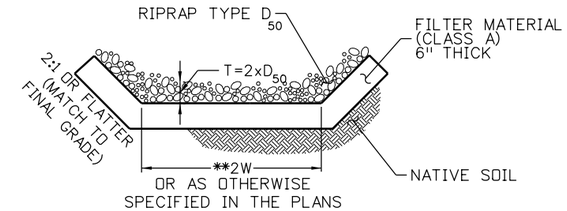

LINING A
NOT TO SCALE

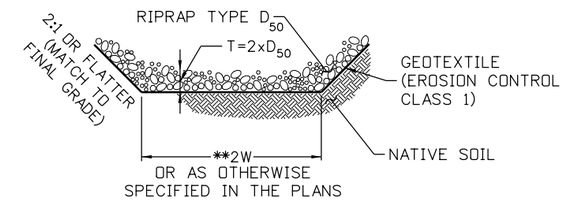

LINING B
NOT TO SCALE

RIPRAP PROTECTION TABLE

PIPE ID	TYPE OF CULVERT	SIZE OF CULVERT	ALIGNMENT	STATION	INLET / OUTLET	TYPE	D (INCHES)	L (FEET)	W (FEET)	D_{50} SIZE (INCHES)	RIPRAP THICKNESS (INCHES)	RIPRAP TYPE	LINING TYPE
P-100	RCBC	7' x 7'	PINTO DR	0+43	INLET	APRON	SEE PLAN AND PROFILE			18	36	SOIL RIPRAP	LINING A
					OUTLET	APRON	SEE PLAN AND PROFILE			18	36	SOIL RIPRAP	LINING A
P-102	RCP	18"	WAGONWHEEL GAP RD	61+24	INLET	ROADSIDE DITCH	SEE DITCH CH-102 DETAILS			12	24	SOIL RIPRAP	LINING B
					OUTLET	-	SEE RIPRAP CONTROL TABLE			9	18	SOIL RIPRAP	LINING A
P-103	RCP	24"	WAGONWHEEL GAP RD	64+83	INLET	ROADSIDE DITCH	SEE DITCH CH-103 DETAILS			9	18	SOIL RIPRAP	LINING B
					OUTLET	OUTLET PROTECTION	24	8	4	9	18	SOIL RIPRAP	LINING A
P-105	RCP	18"	WAGONWHEEL GAP RD	69+96	INLET	ROADSIDE DITCH	SEE DITCH CH-105 DETAILS			9	18	SOIL RIPRAP	LINING B
					OUTLET	-	SEE RIPRAP CONTROL TABLE			9	18	SOIL RIPRAP	LINING B
P-106	RCP	18"	WAGONWHEEL GAP RD	70+60	INLET	-	SEE RIPRAP CONTROL TABLE			9	18	SOIL RIPRAP	LINING B
					OUTLET	-	SEE RIPRAP CONTROL TABLE			9	18	SOIL RIPRAP	LINING B
P-107	RCP	18"	WAGONWHEEL GAP RD	75+08	INLET	ROADSIDE DITCH	SEE DITCH CH-107 DETAILS			9	18	SOIL RIPRAP	LINING B
					OUTLET	ROADSIDE DITCH	SEE DITCH CH-107A DETAILS			12	24	SOIL RIPRAP	LINING A
P-108	RCP	18"	WAGONWHEEL GAP RD	79+38	INLET	-	SEE RIPRAP CONTROL TABLE			9	18	SOIL RIPRAP	LINING B
					OUTLET	OUTLET PROTECTION	18	6	3	9	18	SOIL RIPRAP	LINING A
P-109	RCBC	14' x 8'	WAGONWHEEL GAP RD	92+20	INLET	APRON	SEE PLAN AND PROFILE			-	-	SOIL RIPRAP	LINING A
					OUTLET	APRON	SEE PLAN AND PROFILE			-	-	SOIL RIPRAP	LINING A
P-110	RCP	18"	WAGONWHEEL GAP RD	94+59	INLET	-	SEE RIPRAP CONTROL TABLE			9	18	SOIL RIPRAP	LINING B
					OUTLET	OUTLET PROTECTION	18	6	3	9	18	SOIL RIPRAP	LINING A
P-111	RCP	24"	WAGONWHEEL GAP RD	107+62	INLET	ROADSIDE DITCH	SEE DITCH CH-111 DETAILS			9	18	SOIL RIPRAP	LINING B
					OUTLET	OUTLET PROTECTION	24	8	4	12	24	SOIL RIPRAP	LINING A
P-112	RCP	18"	WAGONWHEEL GAP RD	110+31	INLET	ROADSIDE DITCH	SEE DITCH CH-112 DETAILS			9	18	SOIL RIPRAP	LINING B
					OUTLET	OUTLET PROTECTION	18	6	3	9	18	SOIL RIPRAP	LINING A

100% SET

CALL UTILITY NOTIFICATION CENTER OF COLORADO
CALL 2-BUSINESS DAYS IN ADVANCE BEFORE YOU DIG, GRADE, OR EXCAVATE FOR THE MARKING OF UNDERGROUND MEMBER UTILITIES

REVISIONS: NO.	DATE	REVISION DESCRIPTION:

Boulder County
Michael Baker INTERNATIONAL

BOULDER COUNTY TRANSPORTATION DEPARTMENT
ENGINEERING DIVISION

DESIGNED:	CAD:	CHECKED:	DATE:
JAM	MEM	JPZ	11/04/16

WAGON WHEEL GAP ROAD
DRAINAGE DETAILS
(SHEET 2 OF 3)

PROJECT NO: 4043.SEPT12C34 | SHEET NO: 88

edgar.robles 6:58:08 PM 11/4/2016 pw:\\DCPWAPP1.bkr.mbakercorp.com:pwprod\Documents\Projects\Lakewood_Office\Boulder_County_Emergency_Transportation\T04\08_Sheet_Files\02_Hydraulics\DGN\Wagon_Wheel_Gap_Hydr_Det02.dgn

RIPRAP PROTECTION TABLE (CONTINUED)

PIPE ID	TYPE OF CULVERT	SIZE OF CULVERT	ALIGNMENT	STATION	INLET / OUTLET	TYPE	D	L	W	D_{50} SIZE	RIPRAP THICKNESS	RIPRAP TYPE	LINING TYPE
							INCHES	FEET	FEET	INCHES	INCHES		
P-113	RCP	30"	WAGONWHEEL GAP RD	70+86	INLET	-	SEE RIPRAP CONTROL TABLE			9	18	SOIL RIPRAP	LINING B
					OUTLET	OUTLET PROTECTION	30	10	5	12	24	SOIL RIPRAP	LINING A
P-115	RCP	18"	WAGONWHEEL GAP RD	89+05	INLET	ROADSIDE DITCH	SEE DITCH CH-115 DETAILS			9	18	SOIL RIPRAP	LINING B
					OUTLET	OUTLET PROTECTION	18	6	3	9	18	SOIL RIPRAP	LINING A
P-116	RCP	18"	WAGONWHEEL GAP RD	91+38	INLET	ROADSIDE DITCH	SEE DITCH CH-116 DETAILS			9	18	SOIL RIPRAP	LINING B
					OUTLET	OUTLET PROTECTION	18	6	3	9	18	SOIL RIPRAP	LINING A
P-117	RCP	18"	PINTO DR	6+33	INLET	ROADSIDE DITCH	SEE DITCH CH-117 DETAILS			9	18	SOIL RIPRAP	LINING B
					OUTLET	EMBANKMENT PROTECTION	SEE DITCH PINTO EMBANKMENT DETAILS			9	18	SOIL RIPRAP	LINING A
P-118	RCP	18"	WAGONWHEEL GAP RD	82+65	INLET	ROADSIDE DITCH	SEE DITCH CH-118 DETAILS			9	18	SOIL RIPRAP	LINING B
					OUTLET	OUTLET PROTECTION	18	6	3	9	18	SOIL RIPRAP	LINING A
P-119	HERCP	23" x 14"	WAGONWHEEL GAP RD	97+23	INLET	ROADSIDE DITCH	SEE DITCH CH-119 DETAILS			9	18	SOIL RIPRAP	LINING B
					OUTLET	-	SEE CBC P-132 RIPRAP CONTROL TABLE			-	-	TURF REINFORCEMENT MAT	
P-122	RCP	18"	WAGONWHEEL GAP RD	85+62	INLET	ROADSIDE DITCH	SEE DITCH CH-122 DETAILS			9	18	SOIL RIPRAP	LINING B
					OUTLET	OUTLET PROTECTION	18	6	3	9	18	SOIL RIPRAP	LINING A
P-124	RCBC	2 - 14' x 8'	WAGONWHEEL GAP RD	67+71	INLET	APRON	SEE PLAN AND PROFILE			18	36	SOIL RIPRAP	LINING A
					OUTLET	APRON	SEE PLAN AND PROFILE			18	36	SOIL RIPRAP	LINING A
P-125	RCBC	3 - 10' x 7'	WAGONWHEEL GAP RD	75+87	INLET	APRON	SEE PLAN AND PROFILE			18	36	SOIL RIPRAP	LINING A
					OUTLET	APRON	SEE PLAN AND PROFILE			18	36	SOIL RIPRAP	LINING A
P-127	RCP	18"	WAGONWHEEL GAP RD	76+26	INLET	-	SEE CBC P-125 RIPRAP CONTROL TABLE			9	18	SOIL RIPRAP	LINING B
					OUTLET	APRON	SEE PLAN AND PROFILE FOR P-125			9	18	SOIL RIPRAP	LINING A
P-128	RCP	24"	N/A	N: 266362.13 E: 51200.57	INLET	INLET PROTECTION	SEE RIPRAP CONTROL TABLE			9	18	SOIL RIPRAP	LINING B
					OUTLET	OUTLET PROTECTION	24	5.9	4	9	18	SOIL RIPRAP	LINING A
P-129	HERCP	23" x 14"	N/A	N: 266092.85 E: 51317.69	INLET	INLET PROTECTION	23	8	4	9	18	SOIL RIPRAP	LINING B
					OUTLET	OUTLET PROTECTION	23	8	4	9	18	SOIL RIPRAP	LINING A
P-130	RCP	48"	N/A	N: 266035.94 E: 51311.55	INLET	-	SEE TRM CONTROL TABLE			-	-	TURF REINFORCEMENT MAT	
					OUTLET	-	SEE TRM CONTROL TABLE			-	-	TURF REINFORCEMENT MAT	
P-131	RCP	18"	N/A	N: 265683.77 E: 51706.38	INLET	INLET PROTECTION	SEE RIPRAP CONTROL TABLE			9	18	SOIL RIPRAP	LINING B
					OUTLET	OUTLET PROTECTION	18	5	3	9	18	SOIL RIPRAP	LINING A
P-132	RCBC	2 - 10' x 12'	WAGONWHEEL GAP RD	98+07	INLET	APRON	SEE PLAN AND PROFILE			9	18	SOIL RIPRAP	LINING A
					OUTLET	APRON	SEE PLAN AND PROFILE			9	18	SOIL RIPRAP	LINING A

DITCH FLOWLINE TABLE

ALIGNMENT	STATION	OFFSET	ELEVATION	ID	DESCRIPTION
WAGONWHEEL GAP RD	61+12.15	17.94' LT	5985.45	CH-102	
WAGONWHEEL GAP RD	61+18.44	14.35' LT	5983.54	CH-102	
WAGONWHEEL GAP RD	61+20.46	14.35' LT	5983.54	CH-102	
WAGONWHEEL GAP RD	61+24.90	17.31' LT	5984.73	CH-102	
WAGONWHEEL GAP RD	64+00.00	16.61' LT	5967.61	CH-103	
WAGONWHEEL GAP RD	64+40.00	21.00' LT	5964.31	CH-103	
WAGONWHEEL GAP RD	64+78.24	21.23' LT	5962.61	CH-103	
WAGONWHEEL GAP RD	64+83.62	21.74' LT	5962.61	CH-103	
WAGONWHEEL GAP RD	64+97.87	18.00' LT	5963.45	CH-103	
WAGONWHEEL GAP RD	65+52.34	12.00' LT	5961.73	CH-104	
WAGONWHEEL GAP RD	66+00.00	21.00' LT	5959.01	CH-104	
WAGONWHEEL GAP RD	66+30.00	20.00' LT	5958.13	CH-104	
WAGONWHEEL GAP RD	67+46.08	59.78' RT	5950.89	CH-105	
WAGONWHEEL GAP RD	67+50.55	42.38' RT	5950.38	CH-105	BEGIN CURVE R=19.5'
WAGONWHEEL GAP RD	67+52.89	21.39' LT	5951.99	CH-105	
WAGONWHEEL GAP RD	67+65.37	29.56' RT	5950.07	CH-105	END CURVE R=19.5'
WAGONWHEEL GAP RD	67+70.00	29.47' RT	5950.01	CH-105	
WAGONWHEEL GAP RD	67+80.00	28.25' RT	5949.87	CH-105	
WAGONWHEEL GAP RD	67+90.00	26.73' RT	5949.78	CH-105	
WAGONWHEEL GAP RD	68+00.00	25.81' RT	5949.50	CH-105	
WAGONWHEEL GAP RD	68+10.00	24.95' RT	5949.22	CH-105	
WAGONWHEEL GAP RD	68+20.00	24.13' RT	5948.94	CH-105	
WAGONWHEEL GAP RD	68+30.00	22.89' RT	5948.82	CH-105	
WAGONWHEEL GAP RD	69+40.00	16.16' RT	5945.84	CH-105	
WAGONWHEEL GAP RD	69+65.20	18.94' RT	5943.68	CH-105	
WAGONWHEEL GAP RD	69+65.13	23.16' RT	5943.68	CH-105	
WAGONWHEEL GAP RD	70+27.36	19.93' RT	5942.94	CH-106	
WAGONWHEEL GAP RD	70+27.29	24.14' RT	5942.94	CH-106	
WAGONWHEEL GAP RD	70+40.53	18.50' RT	5942.37	CH-106	
WAGONWHEEL GAP RD	70+39.86	22.67' RT	5942.37	CH-106	
WAGONWHEEL GAP RD	70+80.22	28.66' RT	5940.57	CH-113	
WAGONWHEEL GAP RD	70+80.78	24.48' RT	5940.57	CH-113	
WAGONWHEEL GAP RD	70+81.15	21.96' RT	5939.84	CH-113	
WAGONWHEEL GAP RD	70+87.31	29.40' RT	5940.57	CH-113	
WAGONWHEEL GAP RD	70+87.88	22.51' RT	5939.84	CH-113	
WAGONWHEEL GAP RD	74+57.58	14.00' LT	5921.27	N/A	VALLEY GUTTER FLOWLINE
WAGONWHEEL GAP RD	74+80.00	14.00' LT	5920.03	N/A	VALLEY GUTTER FLOWLINE
WAGONWHEEL GAP RD	75+00.00	14.00' LT	5919.03	N/A	VALLEY GUTTER FLOWLINE
WAGONWHEEL GAP RD	75+20.00	14.00' LT	5917.98	N/A	VALLEY GUTTER FLOWLINE
WAGONWHEEL GAP RD	75+40.00	14.00' LT	5916.87	N/A	VALLEY GUTTER FLOWLINE
WAGONWHEEL GAP RD	75+47.05	14.00' LT	5916.47	N/A	VALLEY GUTTER FLOWLINE
WAGONWHEEL GAP RD	74+35.00	19.18' RT	5920.96	CH-107U	
WAGONWHEEL GAP RD	74+70.00	22.41' RT	5917.03	CH-107U	
WAGONWHEEL GAP RD	74+90.61	23.02' RT	5914.93	CH-107U	
WAGONWHEEL GAP RD	75+26.24	22.67' RT	5912.79	CH-107D	
WAGONWHEEL GAP RD	75+44.75	25.55' RT	5911.69	CH-107D	
WAGONWHEEL GAP RD	75+59.61	36.38' RT	5910.58	CH-107D	
WAGONWHEEL GAP RD	75+82.86	60.37' RT	5908.64	CH-107D	
WAGONWHEEL GAP RD	75+93.18	66.05' RT	5908.02	CH-107D	
WAGONWHEEL GAP RD	76+06.16	67.96' RT	5907.40	CH-107D	
WAGONWHEEL GAP RD	76+25.36	65.39' RT	5904.00	CH-107D	
WAGONWHEEL GAP RD	79+09.91	21.79' LT	5899.41	CH-108	
WAGONWHEEL GAP RD	79+31.82	21.00' LT	5897.87	CH-108	
WAGONWHEEL GAP RD	79+31.66	22.00' LT	5897.87	CH-108	
WAGONWHEEL GAP RD	79+37.15	21.88' LT	5897.87	CH-108	
WAGONWHEEL GAP RD	79+37.00	22.86' LT	5897.87	CH-108	
WAGONWHEEL GAP RD	79+47.00	17.30' LT	5898.95	CH-108	

DITCH FLOWLINE TABLE (CONTINUED)

ALIGNMENT	STATION	OFFSET	ELEVATION	ID	DESCRIPTION
WAGONWHEEL GAP RD	82+52.72	15.20' LT	5889.07	CH-118	
WAGONWHEEL GAP RD	82+58.73	15.59' LT	5886.48	CH-118	
WAGONWHEEL GAP RD	82+61.27	15.59' LT	5886.48	CH-118	
WAGONWHEEL GAP RD	82+66.52	15.20' LT	5888.68	CH-118	
WAGONWHEEL GAP RD	85+51.15	14.75' LT	5877.20	CH-122	
WAGONWHEEL GAP RD	85+58.73	15.00' LT	5874.58	CH-122	
WAGONWHEEL GAP RD	85+60.73	15.00' LT	5874.58	CH-122	
WAGONWHEEL GAP RD	85+68.74	15.00' LT	5875.84	CH-122	
WAGONWHEEL GAP RD	88+75.00	15.59' LT	5854.89	CH-115	
WAGONWHEEL GAP RD	88+93.14	14.53' LT	5854.32	CH-115	
WAGONWHEEL GAP RD	91+18.74	18.83' LT	5847.28	CH-116	
WAGONWHEEL GAP RD	91+31.69	20.54' LT	5846.70	CH-116	
WAGONWHEEL GAP RD	91+35.49	21.34' LT	5846.70	CH-116	
WAGONWHEEL GAP RD	91+45.34	22.83' LT	5847.03	CH-116	
WAGONWHEEL GAP RD	94+40.00	15.00' LT	5832.94	CH-110	
WAGONWHEEL GAP RD	94+56.67	20.78' LT	5830.52	CH-110	
WAGONWHEEL GAP RD	94+60.53	20.83' LT	5830.52	CH-110	
WAGONWHEEL GAP RD	94+70.00	15.00' LT	5831.19	CH-110	
WAGONWHEEL GAP RD	94+40.00	18.00' LT	5833.94	CH-110	
WAGONWHEEL GAP RD	94+56.63	32.31' LT	5836.29	CH-110	
WAGONWHEEL GAP RD	94+60.33	32.14' LT	5836.18	CH-110	
WAGONWHEEL GAP RD	94+70.00	18.00' LT	5832.19	CH-110	
WAGONWHEEL GAP RD	96+20.00	24.08' LT	5823.11	CH-119	
WAGONWHEEL GAP RD	96+52.11	22.55' LT	5822.86	CH-119	
WAGONWHEEL GAP RD	96+74.16	25.22' LT	5822.57	CH-119	
WAGONWHEEL GAP RD	96+84.85	24.15' LT	5822.43	CH-119	
WAGONWHEEL GAP RD	96+84.55	28.10' LT	5822.43	CH-119	
WAGONWHEEL GAP RD	97+58.64	25.13' LT	5821.57	CH-132	
WAGONWHEEL GAP RD	97+58.65	29.09' LT	5821.57	CH-132	
WAGONWHEEL GAP RD	97+80.36	32.14' LT	5821.25	CH-132	
WAGONWHEEL GAP RD	98+30.88	34.86' LT	5820.75	CH-132	
WAGONWHEEL GAP RD	98+55.05	31.01' LT	5819.85	CH-132	
WAGONWHEEL GAP RD	98+76.46	21.82' LT	5818.95	CH-132	
WAGONWHEEL GAP RD	98+86.15	17.69' LT	5817.65	CH-132	
WAGONWHEEL GAP RD	98+96.58	16.28' LT	5816.89	CH-132	
WAGONWHEEL GAP RD	99+25.50	16.00' LT	5814.98	CH-132	
WAGONWHEEL GAP RD	99+62.80	18.41' LT	5808.45	CH-132	
WAGONWHEEL GAP RD	107+21.55	16.24' RT	5780.26	CH-111	
WAGONWHEEL GAP RD	107+50.69	19.64' RT	5775.84	CH-111	
WAGONWHEEL GAP RD	107+56.73	22.03' RT	5775.84	CH-111	
WAGONWHEEL GAP RD	107+68.01	24.92' RT	5777.35	CH-111	
WAGONWHEEL GAP RD	110+05.00	23.70' RT	5762.65	CH-112	
WAGONWHEEL GAP RD	110+26.34	24.25' RT	5761.67	CH-112	
WAGONWHEEL GAP RD	110+30.53	24.64' RT	5761.67	CH-112	
WAGONWHEEL GAP RD	110+34.36	25.92' RT	5761.95	CH-112	
WAGONWHEEL GAP RD	110+37.23	28.75' RT	5762.22	CH-112	
WAGONWHEEL GAP RD	110+40.30	33.60' RT	5762.93	CH-112	
N/A	N 266999.27	E 56545.49	5764.20	CH-140	6' WIDE BOTTOM
N/A	N 266980.92	E 56551.47	5760.99	CH-140	6' WIDE BOTTOM
N/A	N 266962.98	E 56558.58	5757.77	CH-140	6' WIDE BOTTOM
N/A	N 266956.05	E 56560.20	5756.71	CH-140	6' WIDE BOTTOM
N/A	N 266948.99	E 56559.29	5755.65	CH-140	6' WIDE BOTTOM
WAGONWHEEL GAP RD	112+81.42	21.92' LT	5761.00	CH-141	
WAGONWHEEL GAP RD	113+19.52	21.93' LT	5763.00	CH-141	
WAGONWHEEL GAP RD	113+57.62	21.93' LT	5765.00	CH-141	

DITCH FLOWLINE TABLE (CONTINUED)

ALIGNMENT	STATION	OFFSET	ELEVATION	ID	DESCRIPTION
PINTO DR	0+41.83	36.30' RT	6009.97	CH-137	
PINTO DR	0+47.68	27.22' RT	6010.21	CH-137	
PINTO DR	0+61.18	18.36' RT	6010.53	CH-137	
PINTO DR	0+78.56	15.70' RT	6010.91	CH-137	
PINTO DR	1+05.00	15.13' RT	6012.03	CH-137	
PINTO DR	6+24.12	16.00' RT	6020.34	CH-117	
PINTO DR	6+30.87	13.51' RT	6018.33	CH-117	
PINTO DR	6+35.63	13.49' RT	6018.33	CH-117	
PINTO DR	6+40.00	16.00' RT	6020.35	CH-117	
N/A	N 265481.78	E 51886.05	5997.01	CH-100	3' WIDE BOTTOM
N/A	N 265476.25	E 51906.58	5995.10	CH-100	3' WIDE BOTTOM
N/A	N 265462.69	E 51941.39	5992.26	CH-100	3' WIDE BOTTOM
N/A	N 265447.98	E 51961.55	5990.83	CH-100	3' WIDE BOTTOM
N/A	N 265434.78	E 51975.18	5990.00	CH-100	3' WIDE BOTTOM
N/A	N 265414.88	E 51999.25	5989.00	CH-100	3' WIDE BOTTOM
N/A	N 265386.86	E 52043.26	5987.55	CH-100	3' WIDE BOTTOM

100% SET

CALL UTILITY NOTIFICATION CENTER OF COLORADO
811
CALL 2-BUSINESS DAYS IN ADVANCE BEFORE YOU DIG, GRADE, OR EXCAVATE FOR THE MARKING OF UNDERGROUND MEMBER UTILITIES

REVISIONS:	NO.	DATE	REVISION DESCRIPTION:

Boulder County

Michael Baker INTERNATIONAL

BOULDER COUNTY TRANSPORTATION DEPARTMENT
ENGINEERING DIVISION

DESIGNED:	CAD:	CHECKED:	DATE:
BMM	BMM	SLS	11/04/16

WAGONWHEEL GAP ROAD
DRAINAGE DITCHES FLOWLINE TABLE

PROJECT NO: 4043.SEPT12C34 | SHEET NO: 90

joann.murray 10:00:04 PM pw:\\DCPWAPP1.bkr.mbakercorp.com:pwprod\Documents\Projects\Lakewood_Office\Boulder_County_Emergency_Transportation\T04\08_Sheet_Files\02_Hydraulics\DGN\Wagon_Wheel_Gap_Hydr_Det04.dgn

STREAM GRADING TABLE

ALIGNMENT	STATION	OFFSET	ELEVATION	DESCRIPTION
WAGONWHEEL GAP RD	61+17.14	106.34' RT	5979.36	UPSTREAM BOW MOUNTAIN BRIDGE
WAGONWHEEL GAP RD	61+24.51	107.72' RT	5980.11	UPSTREAM BOW MOUNTAIN BRIDGE
WAGONWHEEL GAP RD	61+19.03	81.20'RT	5978.30	UPSTREAM BOW MOUNTAIN BRIDGE
WAGONWHEEL GAP RD	61+30.66	83.37' RT	5978.30	UPSTREAM BOW MOUNTAIN BRIDGE
WAGONWHEEL GAP RD	61+31.61	80.16' RT	5977.97	UPSTREAM BOW MOUNTAIN BRIDGE
WAGONWHEEL GAP RD	61+30.45	58.88' RT	5976.36	UPSTREAM BOW MOUNTAIN BRIDGE
WAGONWHEEL GAP RD	61+40.18	66.04' RT	5976.20	UPSTREAM BOW MOUNTAIN BRIDGE
WAGONWHEEL GAP RD	61+46.54	47.84' RT	5974.87	UPSTREAM BOW MOUNTAIN BRIDGE
WAGONWHEEL GAP RD	61+47.80	43.72' RT	5976.14	UPSTREAM BOW MOUNTAIN BRIDGE
WAGONWHEEL GAP RD	61+50.95	59.01' RT	5974.87	UPSTREAM BOW MOUNTAIN BRIDGE
WAGONWHEEL GAP RD	61+65.90	38.80' RT	5974.73	UPSTREAM BOW MOUNTAIN BRIDGE
WAGONWHEEL GAP RD	61+74.49	42.03' RT	5972.56	UPSTREAM BOW MOUNTAIN BRIDGE
WAGONWHEEL GAP RD	61+76.26	55.12' RT	5972.42	UPSTREAM BOW MOUNTAIN BRIDGE
WAGONWHEEL GAP RD	61+84.62	37.99' RT	5973.27	UPSTREAM BOW MOUNTAIN BRIDGE
WAGONWHEEL GAP RD	61+87.10	59.46' RT	5972.73	UPSTREAM BOW MOUNTAIN BRIDGE
WAGONWHEEL GAP RD	61+99.60	39.00' RT	5971.85	UPSTREAM BOW MOUNTAIN BRIDGE
WAGONWHEEL GAP RD	61+99.99	46.92' RT	5970.43	UPSTREAM BOW MOUNTAIN BRIDGE
WAGONWHEEL GAP RD	61+96.56	61.70' RT	5970.30	UPSTREAM BOW MOUNTAIN BRIDGE
WAGONWHEEL GAP RD	61+96.37	65.17' RT	5971.84	UPSTREAM BOW MOUNTAIN BRIDGE
WAGONWHEEL GAP RD	62+04.11	64.15' RT	5969.67	UPSTREAM BOW MOUNTAIN BRIDGE
WAGONWHEEL GAP RD	62+08.67	49.77' RT	5969.67	UPSTREAM BOW MOUNTAIN BRIDGE
WAGONWHEEL GAP RD	62+17.39	76.74' RT	5969.82	UPSTREAM BOW MOUNTAIN BRIDGE
WAGONWHEEL GAP RD	62+21.84	67.80' RT	5968.08	UPSTREAM BOW MOUNTAIN BRIDGE
WAGONWHEEL GAP RD	62+24.07	52.95' RT	5968.08	UPSTREAM BOW MOUNTAIN BRIDGE
WAGONWHEEL GAP RD	62+39.83	53.90' RT	5966.50	UPSTREAM BOW MOUNTAIN BRIDGE
WAGONWHEEL GAP RD	62+40.02	68.90' RT	5966.50	UPSTREAM BOW MOUNTAIN BRIDGE
WAGONWHEEL GAP RD	63+06.72	49.09' RT	5964.24	DOWNSTREAM BOW MOUNTAIN BRIDGE
WAGONWHEEL GAP RD	63+10.60	63.62' RT	5964.24	DOWNSTREAM BOW MOUNTAIN BRIDGE
WAGONWHEEL GAP RD	63+15.95	74.26' RT	5965.69	DOWNSTREAM BOW MOUNTAIN BRIDGE
WAGONWHEEL GAP RD	63+21.42	35.85' RT	5965.32	DOWNSTREAM BOW MOUNTAIN BRIDGE
WAGONWHEEL GAP RD	63+28.08	41.67' RT	5963.73	DOWNSTREAM BOW MOUNTAIN BRIDGE
WAGONWHEEL GAP RD	63+34.20	55.36' RT	5963.73	DOWNSTREAM BOW MOUNTAIN BRIDGE
WAGONWHEEL GAP RD	63+42.07	56.00' RT	5965.20	DOWNSTREAM BOW MOUNTAIN BRIDGE
WAGONWHEEL GAP RD	63+46.64	50.11' RT	5963.67	DOWNSTREAM BOW MOUNTAIN BRIDGE
WAGONWHEEL GAP RD	63+49.95	31.78' RT	5965.15	DOWNSTREAM BOW MOUNTAIN BRIDGE
WAGONWHEEL GAP RD	63+55.12	35.89' RT	5963.63	DOWNSTREAM BOW MOUNTAIN BRIDGE
WAGONWHEEL GAP RD	63+58.82	46.89' RT	5963.62	DOWNSTREAM BOW MOUNTAIN BRIDGE
WAGONWHEEL GAP RD	63+59.00	48.38' RT	5965.12	DOWNSTREAM BOW MOUNTAIN BRIDGE
WAGONWHEEL GAP RD	63+72.41	34.70' RT	5965.08	DOWNSTREAM BOW MOUNTAIN BRIDGE
WAGONWHEEL GAP RD	63+71.42	47.22' RT	5963.57	DOWNSTREAM BOW MOUNTAIN BRIDGE
WAGONWHEEL GAP RD	111+72.84	50.18' LT	5753.28	UPSTREAM LEE HILL APPROACH BRIDGE
WAGONWHEEL GAP RD	111+72.97	47.43' LT	5752.48	UPSTREAM LEE HILL APPROACH BRIDGE
WAGONWHEEL GAP RD	111+73.31	39.94' LT	5752.48	UPSTREAM LEE HILL APPROACH BRIDGE
WAGONWHEEL GAP RD	111+73.43	37.19' LT	5753.28	UPSTREAM LEE HILL APPROACH BRIDGE
WAGONWHEEL GAP RD	112+10.84	35.26' LT	5750.51	UPSTREAM LEE HILL APPROACH BRIDGE
WAGONWHEEL GAP RD	112+11.25	37.99' LT	5749.71	UPSTREAM LEE HILL APPROACH BRIDGE
WAGONWHEEL GAP RD	112+12.71	34.98' LT	5750.37	UPSTREAM LEE HILL APPROACH BRIDGE
WAGONWHEEL GAP RD	112+15.83	44.85' LT	5749.47	UPSTREAM LEE HILL APPROACH BRIDGE
WAGONWHEEL GAP RD	112+17.81	47.30' LT	5750.20	UPSTREAM LEE HILL APPROACH BRIDGE
WAGONWHEEL GAP RD	112+24.91	28.94' LT	5749.11	UPSTREAM LEE HILL APPROACH BRIDGE
WAGONWHEEL GAP RD	112+25.27	31.15' LT	5748.46	UPSTREAM LEE HILL APPROACH BRIDGE
WAGONWHEEL GAP RD	112+35.59	35.80' LT	5748.10	UPSTREAM LEE HILL APPROACH BRIDGE
WAGONWHEEL GAP RD	112+36.99	37.04' LT	5748.89	UPSTREAM LEE HILL APPROACH BRIDGE

STREAM GRADING TABLE

ALIGNMENT	STATION	OFFSET	ELEVATION	DESCRIPTION
WAGONWHEEL GAP RD	112+47.57	55.17' RT	5746.97	DOWNSTREAM LEE HILL APPROACH BRIDGE
WAGONWHEEL GAP RD	112+50.26	54.60' RT	5746.17	DOWNSTREAM LEE HILL APPROACH BRIDGE
WAGONWHEEL GAP RD	112+57.60	53.06' RT	5746.17	DOWNSTREAM LEE HILL APPROACH BRIDGE
WAGONWHEEL GAP RD	112+60.29	52.50' RT	5746.97	DOWNSTREAM LEE HILL APPROACH BRIDGE
WAGONWHEEL GAP RD	112+49.63	64.96' RT	5746.86	DOWNSTREAM LEE HILL APPROACH BRIDGE
WAGONWHEEL GAP RD	112+52.32	64.39' RT	5746.06	DOWNSTREAM LEE HILL APPROACH BRIDGE
WAGONWHEEL GAP RD	112+59.66	62.85' RT	5746.06	DOWNSTREAM LEE HILL APPROACH BRIDGE
WAGONWHEEL GAP RD	112+62.35	62.29' RT	5746.86	DOWNSTREAM LEE HILL APPROACH BRIDGE
WAGONWHEEL GAP RD	112+72.85	100.17' RT	5746.42	DOWNSTREAM LEE HILL APPROACH BRIDGE
WAGONWHEEL GAP RD	112+74.47	97.95' RT	5745.62	DOWNSTREAM LEE HILL APPROACH BRIDGE
WAGONWHEEL GAP RD	112+78.90	91.89' RT	5745.62	DOWNSTREAM LEE HILL APPROACH BRIDGE
WAGONWHEEL GAP RD	112+80.52	89.67' RT	5746.42	DOWNSTREAM LEE HILL APPROACH BRIDGE

DRAINAGE GRADING TABLE

ALIGNMENT	STATION	OFFSET	ELEVATION	DESCRIPTION
WAGONWHEEL GAP RD	64+60.00	37.45' RT	5965.37	GRADING NEAR P-103 OUTLET
WAGONWHEEL GAP RD	64+82.48	24.01' RT	5962.16	GRADING NEAR P-103 OUTLET
WAGONWHEEL GAP RD	64+87.86	23.50' RT	5962.16	GRADING NEAR P-103 OUTLET
WAGONWHEEL GAP RD	65+20.00	15.66' RT	5964.00	GRADING NEAR P-103 OUTLET
WAGONWHEEL GAP RD	70+75.00	22.80' LT	5940.37	GRADING NEAR P-113 OUTLET
WAGONWHEEL GAP RD	70+85.07	23.87' LT	5938.46	GRADING NEAR P-113 OUTLET
WAGONWHEEL GAP RD	70+91.46	23.35' LT	5938.46	GRADING NEAR P-113 OUTLET
WAGONWHEEL GAP RD	71+05.00	29.54' LT	5935.50	GRADING NEAR P-113 OUTLET
WAGONWHEEL GAP RD	82+52.72	18.20' LT	5890.07	DITCH AT THE FRONT OF RETAINING WALL NEAR P-118 INLET
WAGONWHEEL GAP RD	82+58.73	18.20' LT	5886.48	DITCH AT THE FRONT OF RETAINING WALL NEAR P-118 INLET
WAGONWHEEL GAP RD	82+61.27	18.20' LT	5886.48	DITCH AT THE FRONT OF RETAINING WALL NEAR P-118 INLET
WAGONWHEEL GAP RD	82+66.52	18.20' LT	5889.68	DITCH AT THE FRONT OF RETAINING WALL NEAR P-118 INLET
WAGONWHEEL GAP RD	97+20.78	46.67' RT	5823.60	GRADING BREAKLINE NEAR P-132
WAGONWHEEL GAP RD	97+69.04	33.30' RT	5822.51	GRADING BREAKLINE NEAR P-132
WAGONWHEEL GAP RD	98+15.00	21.47' RT	5821.42	GRADING BREAKLINE NEAR P-132
WAGONWHEEL GAP RD	97+56.55	34.00' LT	5824.66	GRADING BREAKLINE 4' BENCH ALONG EXISTING DRIVEWAY
WAGONWHEEL GAP RD	97+77.67	38.71' LT	5824.80	GRADING BREAKLINE 4' BENCH ALONG EXISTING DRIVEWAY
WAGONWHEEL GAP RD	98+26.46	52.22' LT	5829.61	GRADING BREAKLINE 4' BENCH ALONG EXISTING DRIVEWAY
WAGONWHEEL GAP RD	98+45.71	55.77' LT	5831.80	GRADING BREAKLINE 4' BENCH ALONG EXISTING DRIVEWAY
WAGONWHEEL GAP RD	98+57.92	58.37' LT	5832.80	GRADING BREAKLINE 4' BENCH ALONG EXISTING DRIVEWAY
WAGONWHEEL GAP RD	98+88.99	67.27' LT	5837.00	GRADING BREAKLINE 4' BENCH ALONG EXISTING DRIVEWAY
WAGONWHEEL GAP RD	99+24.34	74.98' LT	5838.50	GRADING BREAKLINE 4' BENCH ALONG EXISTING DRIVEWAY
WAGONWHEEL GAP RD	99+35.56	77.61' LT	5838.00	GRADING BREAKLINE 4' BENCH ALONG EXISTING DRIVEWAY
WAGONWHEEL GAP RD	97+85.04	37.37' LT	5825.02	GRADING BREAKLINE
WAGONWHEEL GAP RD	97+88.85	36.82' LT	5824.76	GRADING BREAKLINE
WAGONWHEEL GAP RD	98+61.61	28.92' LT	5820.45	GRADING BREAKLINE
WAGONWHEEL GAP RD	99+26.22	22.57' LT	5816.55	GRADING BREAKLINE

100% SET

CALL UTILITY NOTIFICATION CENTER OF COLORADO
811
CALL 2-BUSINESS DAYS IN ADVANCE BEFORE YOU DIG, GRADE, OR EXCAVATE FOR THE MARKING OF UNDERGROUND MEMBER UTILITIES

REVISIONS:	NO.	DATE	REVISION DESCRIPTION:

Boulder County

Michael Baker INTERNATIONAL

BOULDER COUNTY TRANSPORTATION DEPARTMENT
ENGINEERING DIVISION

DESIGNED:	CAD:	CHECKED:	DATE:
BMM	BMM	SLS	11/04/16

WAGONWHEEL GAP ROAD
DRAINAGE GRADING POINTS (SHEET 1 OF 1)

PROJECT NO: 4043.SEPT12C34 | SHEET NO: 91

joann.murray 9:13:34 PM pw:\\DCPWAPP1.bkr.mbakercorp.com:pwprod\Documents\Projects\Lakewood_Office\Boulder_County_Emergency_Transportation\T04\08_Sheet_Files\02_Hydraulics\DGN\Wagon_Wheel_Gap_Hydr_Det05.dgn

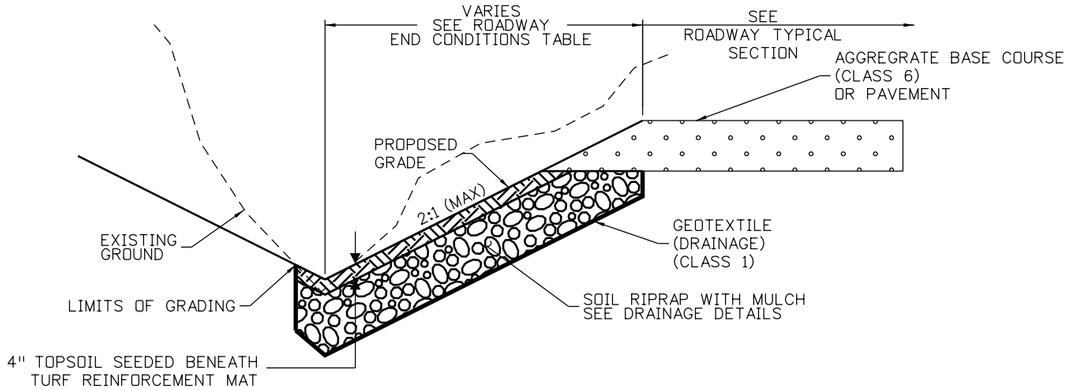

BURIED SOIL RIPRAP TO GRADING LIMITS
OPTION 1
NOT TO SCALE

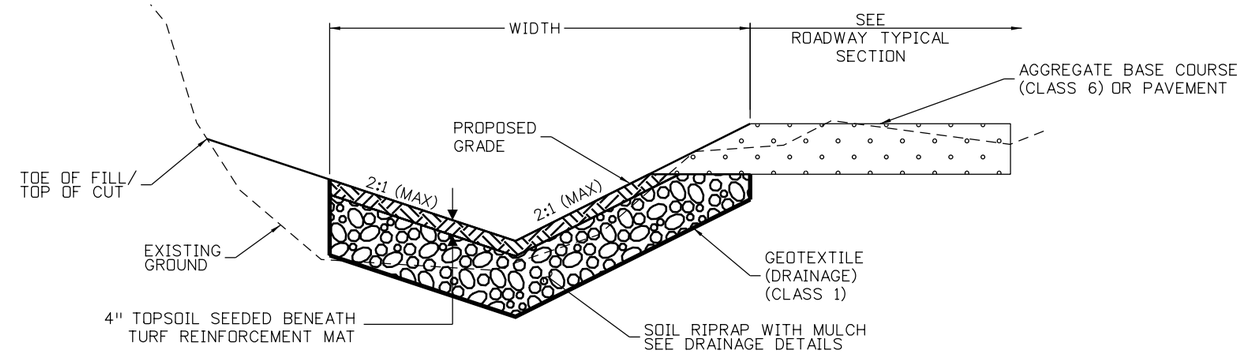

BURIED SOIL RIPRAP TO FIXED WIDTH
OPTION 2
NOT TO SCALE

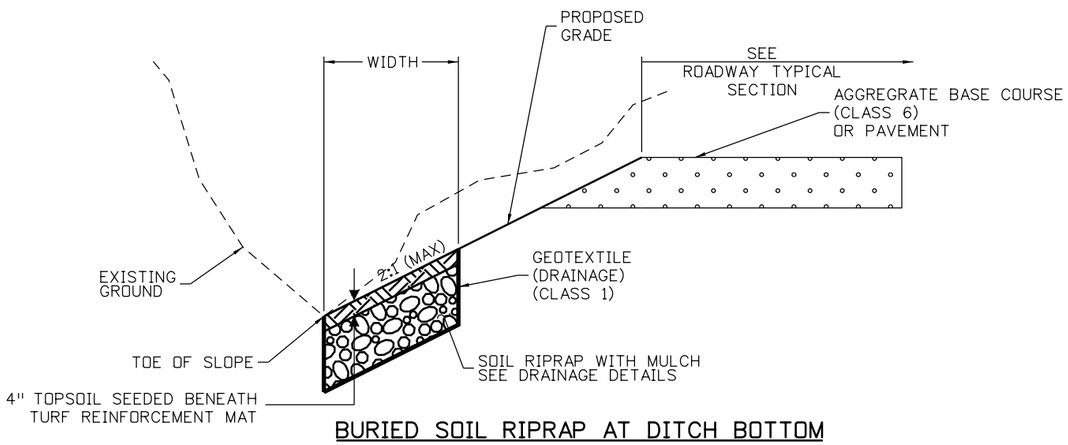

BURIED SOIL RIPRAP AT DITCH BOTTOM
OPTION 3
NOT TO SCALE

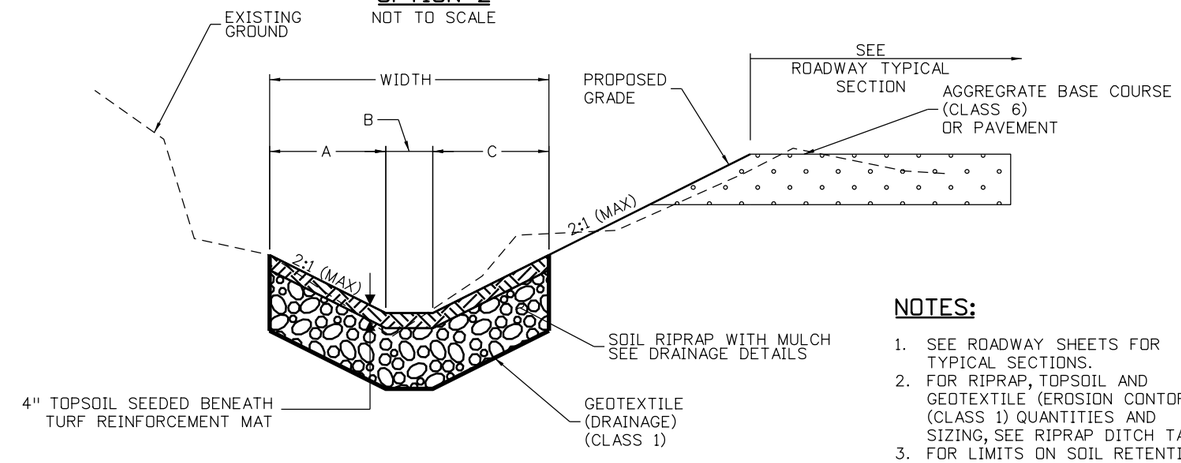

BURIED SOIL RIPRAP AT DITCH BOTTOM
OPTION 4
NOT TO SCALE

NOTES:

1. SEE ROADWAY SHEETS FOR TYPICAL SECTIONS.
2. FOR RIPRAP, TOPSOIL AND GEOTEXTILE (EROSION CONTORL) (CLASS 1) QUANTITIES AND SIZING, SEE RIPRAP DITCH TABLE.
3. FOR LIMITS ON SOIL RETENTION BLANKET OR TURF REINFORCMEENT MAT, SEE STORMWATER MANAGEMENT PLANS.

DITCH RIPRAP TABLE

ID	ALIGNMENT	BEGIN STATION	END STATION	OFFSET	RIPRAP SIZE INCHES	RIPRAP THICKNESS INCHES	TOPSOIL THICKNESS INCHES	OPTION	WIDTH FEET	NOTES
CH-100	WAGONWHEEL GAP RD	58+81	60+27	RT	18	36	4	4	9	SEE DITCH SECTION ON SHEET DRAINAGE PLAN 1
CH-102	WAGONWHEEL GAP RD	56+80	60+90	LT	9	18	4	2	6	
		60+90	61+38	LT	9	18	4	1	-	
BOW MOUNTAIN EMBANKMENT	WAGONWHEEL GAP RD	61+22	62+21	RT	18	36	4	-	-	SEE RIPRAP BANK PROTECTION DETAIL
CH-102A	WAGONWHEEL GAP RD	60+04	60+89	RT	9	18	4	2	6	
		60+89	61+20	RT	9	18	4	2	VARIES	SEE RIPRAP CONTROL POINTS FOR P-102 DOWNSTREAM
CH-103	WAGONWHEEL GAP RD	61+41	63+17	LT	9	18	4	1	-	
		64+00	65+14	LT	9	18	4	1	-	
CH-104	WAGONWHEEL GAP RD	65+51	67+45	LT	9	18	4	1	-	
		67+45	68+20	LT	9	18	4	2	6	
		68+20	68+62	LT	9	18	4	1	-	

100% SET

CALL UTILITY NOTIFICATION CENTER OF COLORADO
811
CALL 2-BUSINESS DAYS IN ADVANCE BEFORE YOU DIG, GRADE, OR EXCAVATE FOR THE MARKING OF UNDERGROUND MEMBER UTILITIES

REVISIONS: NO.	DATE	REVISION DESCRIPTION:

BOULDER COUNTY TRANSPORTATION DEPARTMENT
ENGINEERING DIVISION
Boulder County
Michael Baker INTERNATIONAL

DESIGNED:	CAD:	CHECKED:	DATE:
JAM	MEM	JPZ	11/04/16

WAGON WHEEL GAP ROAD
DRAINAGE DITCH DETAILS (SHEET 1 OF 2)

PROJECT NO: 4043.SEPT12C34 SHEET NO: 92

edgar.robles 6:59:16 PM 11/4/2016 pw:\\DCPWAPP1.bkr.mbakercorp.com:pwprod\Documents\Projects\Lakewood_Office\Boulder_County_Emergency_Transportation\T04\08_Sheet_Files\02_Hydraulics\DGN\Wagon_Wheel_Gap_Hydr_Det06.dgn

ID	ALIGNMENT	BEGIN STATION	END STATION	OFFSET	RIPRAP SIZE INCHES	RIPRAP THICKNESS INCHES	TOPSOIL THICKNESS INCHES	OPTION	WIDTH FEET	NOTES
CH-105	WAGONWHEEL GAP RD	67+29	68+35	RT	9	18	4	3	3	
		68+35	68+69	RT	9	18	4	3	VARIES	TAPERS TO EDGE OF ROADWAY
		68+69	69+75	RT	9	18	4	1	-	
CH-107U	WAGONWHEEL GAP RD	72+80	75+04	RT	9	18	4	1	-	
CH-107D	WAGONWHEEL GAP RD	75+14	76+06	RT	9	18	4	-	-	SEE RIPRAP CONTROL POINTS FOR P-125 DOWNSTREAM
CH-108	WAGONWHEEL GAP RD	76+29	77+25	LT	9	18	4	1	-	
		77+25	79+19	LT	9	18	4	3	3	
		79+19	79+52	LT	9	18	4	3	VARIES	SEE RIPRAP CONTROL POINTS FOR P-108 UPSTREAM
LION POINT	WAGONWHEEL GAP RD	92+80	94+55	RT	18	36	4	-	-	SEE RIPRAP BANK PROTECTION DETAIL
CH-110	WAGONWHEEL GAP RD	93+36	94+38	LT	9	18	4	2	6	
		94+38	94+70	LT	9	18	4	2	VARIES	SEE RIPRAP CONTROL POINTS FOR P-110 UPSTREAM
CH-111	WAGONWHEEL GAP RD	102+15	106+43	RT	9	18	4	1	-	
		107+20	107+68	RT	12	24	4	1	-	
CH-112	WAGONWHEEL GAP RD	107+87	110+40	RT	9	18	4	1	-	
LEE HILL EMBANKMENT	WAGONWHEEL GAP RD	111+72	112+78	LT	18	36	4	-	-	SEE RIPRAP BANK PROTECTION DETAIL
CH-115	WAGONWHEEL GAP RD	85+66	89+23	LT	9	18	4	1	-	
CH-116	WAGONWHEEL GAP RD	89+61	91+62	LT	9	18	4	1	-	
CH-117	PINTO DR	4+55	5+29	RT	9	18	4	1	-	
		5+29	6+25	RT	9	18	4	2	9	
		6+25	6+33	RT	9	18	4	1	-	
CH-117A	PINTO DR	6+33	8+00	RT	9	18	4	1	-	
CH-118	WAGONWHEEL GAP RD	75+71	82+66	LT	9	18	4	1	-	
CH-119	WAGONWHEEL GAP RD	94+70	95+35	LT	9	18	4	1	-	
		95+35	96+20	LT	9	18	4	3	4	
		96+20	97+02	LT	9	18	4	1	-	
CH-120	WAGONWHEEL GAP RD	97+47	98+11	RT	9	18	4	4	6	
		98+11	99+31	RT	9	18	4	3	3	
		99+31	99+52	RT	9	18	4	1	-	
		99+52	101+00	RT	9	18	4	3	3	
CH-122	WAGONWHEEL GAP RD	82+66	83+44	LT	9	18	4	1	-	
		83+44	84+49	LT	9	18	4	2	6	
		84+49	84+99	LT	9	18	4	1	-	
		84+99	85+66	LT	9	18	4	2	6	
CH-127	WAGONWHEEL GAP RD	75+78	76+14	LT	9	18	4	-	-	SEE RIPRAP CONTROL POINTS FOR P-125 UPSTREAM
		76+14	76+23	LT	9	18	4	1	-	
CH-136	BOW MOUNTAIN RD	20+94	21+40	RT	9	18	4	4	4	
		21+40	21+68	RT	9	18	4	2	2	
		21+68	21+83	RT	9	18	4	1	-	
CH-137	PINTO DR	0+41	0+73	RT	9	18	4	3	VARIES	SEE RIPRAP CONTROL POINTS
		0+73	4+28	RT	9	18	4	1	-	
CH-140	WAGONWHEEL GAP RD	111+72	112+78	LT	9	18	4	4	VARIES	SEE RIPRAP CONTROL POINTS FOR CH-140
CH-141	WAGONWHEEL GAP RD	112+84	112+98	LT	9	18	4	3	VARIES	SEE RIPRAP CONTROL POINTS FOR CH-141
		112+98	113+59	LT	9	18	4	4	6	
PINTO EMBANKMENT	PINTO DR	6+25	7+30	LT	9	18	4	-	-	SEE RIPRAP BANK PROTECTION DETAIL

100% SET

CALL UTILITY NOTIFICATION CENTER OF COLORADO
811
CALL 2-BUSINESS DAYS IN ADVANCE BEFORE YOU DIG, GRADE, OR EXCAVATE FOR THE MARKING OF UNDERGROUND MEMBER UTILITIES

REVISIONS: NO.	DATE	REVISION DESCRIPTION:

Boulder County

BOULDER COUNTY TRANSPORTATION DEPARTMENT
ENGINEERING DIVISION

Michael Baker INTERNATIONAL

DESIGNED:	CAD:	CHECKED:	DATE:
JAM	MEM	JPZ	11/04/16

WAGON WHEEL GAP ROAD
DRAINAGE DITCH DETAILS (SHEET 2 OF 2)

PROJECT NO: 4043.SEPT12C34 | SHEET NO: 93

edgar.robles 6:59:32 PM 11/4/2016 pw:\\DCPWAPP1.bkr.mbakercorp.com:pwprod\Documents\Projects\Lakewood_Office\Boulder_County_Emergency_Transportation\T04\08_Sheet_Files\02_Hydraulics\DGN\Wagon_Wheel_Gap_Hydr_Det07.dgn

P-102 (DOWNSTREAM) RIPRAP CONTROL POINTS

CP	STA	OFF	ELEV	DESCRIPTION
RR-1	61+20.00	16.05' RT	5984.86	
RR-2	61+22.27	30.13' RT	5982.53	
RR-3	61+36.56	24.60' RT	5981.89	
RR-4	61+33.67	15.81' RT	5984.23	

P-106 (UPSTREAM)/ P-105 (DOWNSTREAM) RIPRAP CONTROL POINTS

CP	STA	OFF	ELEV	DESCRIPTION
RR-5	70+13.76	20.41' RT	5946.00	
RR-6	70+10.15	23.91' RT	5946.00	
RR-7	70+21.89	30.42' RT	5946.00	
RR-8	70+41.85	29.72' RT	5946.00	
RR-9	70+50.57	25.55' RT	5945.80	

P-113 (UPSTREAM)/ P-106 (DOWNSTREAM) RIPRAP CONTROL POINTS

CP	STA	OFF	ELEV	DESCRIPTION
RR-10	70+64.01	30.41' RT	5945.76	
RR-11	70+80.28	41.72' RT	5947.10	
RR-12	71+08.89	32.40' RT	5944.65	

P-108 (UPSTREAM) RIPRAP CONTROL POINTS

CP	STA	OFF	ELEV	DESCRIPTION
RR-13	79+18.67	21.31' LT	5898.84	
RR-14	79+28.67	30.14' LT	5903.53	
RR-15	79+32.11	31.58' LT	5904.13	
RR-16	79+39.02	31.14' LT	5903.56	
RR-17	79+46.99	17.30' LT	5898.95	
RR-18	79+51.61	20.64' LT	5899.91	EDGE OF DRIVEWAY
RR-19	79+47.01	12.00' LT	5900.28	EDGE OF ROAD
RR-20	79+36.40	15.67' LT	5899.88	TOP OF FES
RR-21	79+34.51	15.36' LT	5899.88	TOP OF FES
RR-22	79+22.95	17.18' LT	5899.55	

P-110 (UPSTREAM) RIPRAP CONTROL POINTS

CP	STA	OFF	ELEV	DESCRIPTION
RR-23	94+38.25	17.98' LT	5834.04	
RR-24	94+44.24	19.81' LT	5834.00	
RR-25	94+56.64	27.73' LT	5834.00	
RR-26	94+60.41	27.78' LT	5834.00	
RR-27	94+69.23	22.03' LT	5834.00	
RR-28	94+70.78	21.82' LT	5834.00	
RR-29	94+70.00	19.17' LT	5832.25	

EMBANKMENT SLOPE RIPRAP CONTROL POINTS

CP	STA	OFF	ELEV	DESCRIPTION
RR-30	111+72.80	51.13' LT	5753.66	
RR-31	111+72.46	58.68' LT	5757.26	
RR-32	111+84.07	57.74' LT	5756.29	
RR-33	111+94.84	56.23' LT	5755.18	
RR-34	111+97.98	56.94' LT	5755.64	
RR-35	112+00.13	58.51' LT	5756.68	
RR-36	112+03.37	72.00' LT	5765.69	
RR-37	112+09.00	73.80' LT	5766.87	
RR-38	112+10.79	73.77' LT	5766.96	
RR-39	112+14.95	74.59' LT	5767.64	
RR-40	112+18.88	73.79' LT	5767.23	
RR-41	112+21.68	73.07' LT	5766.84	
RR-42	112+28.69	69.55' LT	5765.39	
RR-43	112+33.26	66.69' LT	5764.44	
RR-44	112+36.31	63.98' LT	5763.57	
RR-45	112+38.42	63.68' LT	5763.34	
RR-46	112+40.10	62.59' LT	5762.53	
RR-47	112+41.14	61.72' LT	5761.89	
RR-66	112+64.23	49.14' LT	5759.00	
RR-67	112+74.62	46.18' LT	5761.68	

CH-140 CONTROL POINTS

CP	STA	OFF	ELEV	DESCRIPTION
RR-48	112+45.52	57.65' LT	5759.00	
RR-49	112+43.26	69.53' LT	5760.99	
RR-50	112+39.06	82.51' LT	5763.56	
RR-51	112+39.40	87.67' LT	5763.67	
RR-52	112+41.12	93.44' LT	5763.99	
RR-53	112+43.73	93.33' LT	5763.99	
RR-54	112+45.87	94.35' LT	5764.18	
RR-55	112+46.63	95.32' LT	5764.20	
RR-56	112+48.61	95.66' LT	5764.20	
RR-57	112+51.72	92.77' LT	5763.87	
RR-58	112+56.38	89.53' LT	5763.62	
RR-59	112+56.66	84.53' LT	5763.25	
RR-60	112+56.00	75.94' LT	5761.51	
RR-61	112+56.29	71.89' LT	5760.80	
RR-62	112+57.98	67.10' LT	5760.21	
RR-63	112+58.11	62.15' LT	5759.26	
RR-64	112+61.08	57.38' LT	5758.99	
RR-65	112+59.94	54.19' LT	5758.25	

CH-141 RIPRAP CONTROL POINTS

CP	STA	OFF	ELEV	DESCRIPTION
RR-68	112+89.69	25.12' LT	5762.50	
RR-69	112+98.21	18.99' LT	5762.43	
RR-70	112+97.59	14.35' LT	5761.93	

edgar.robles 6:59:49 PM 11/4/2016 pw:\\DCPWAPP1.bkr.mbakercorp.com:pwprod\Documents\Projects\Lakewood_Office\Boulder_County_Emergency_Transportation\T04\08_Sheet_Files\02_Hydraulics\DGN\Wagon_Wheel_Gap_Hydr_Det08.dgn

100% SET

CALL UTILITY NOTIFICATION CENTER OF COLORADO
811
CALL 2-BUSINESS DAYS IN ADVANCE BEFORE YOU DIG, GRADE, OR EXCAVATE FOR THE MARKING OF UNDERGROUND MEMBER UTILITIES

REVISIONS: NO.	DATE	REVISION DESCRIPTION:

Boulder County

Michael Baker INTERNATIONAL

BOULDER COUNTY TRANSPORTATION DEPARTMENT
ENGINEERING DIVISION

DESIGNED:	CAD:	CHECKED:	DATE:
JAM	MEM	JPZ	11/04/16

WAGON WHEEL GAP ROAD
DRAINAGE RIPRAP CONTROL
(SHEET 1 OF 2)

PROJECT NO: 4043.SEPT12C34 | SHEET NO: 94

CH-137 RIPRAP CONTROL POINTS
HCL PINTO DR

CP	STA	OFF	ELEV	DESCRIPTION
RR-71	0+73.46	20.27' RT	6013.00	
RR-72	0+64.47	21.37' RT	6011.75	
RR-73	0+50.70	28.66' RT	6011.09	
RR-74	0+48.48	37.07' RT	6013.06	
RR-75	0+45.21	40.34' RT	6013.06	
RR-76	0+41.52	39.52' RT	6011.75	
RR-77	0+40.80	36.81' RT	6009.80	WINGWALL
RR-78	0+41.83	36.30' RT	6010.00	WINGWALL
RR-79	0+40.84	32.70' RT	6009.97	WINGWALL
RR-80	0+59.53	10.00' RT	6011.00	EDGE OF ROAD

P-128 (UPSTREAM) RIPRAP CONTROL POINTS

CP	N	E	ELEV	DESCRIPTION
RR-81	266367.35	51218.22	6099.68	TOP OF FES
RR-82	266375.47	51216.64	6100.66	
RR-83	266377.36	51223.07	6100.22	
RR-84	266371.37	51227.33	6099.78	
RR-85	266367.53	51233.37	6101.47	
RR-86	266361.40	51234.11	6100.98	EDGE OF DRIVEWAY
RR-87	266360.03	51225.29	6100.61	EDGE OF DRIVEWAY
RR-88	266361.70	51220.24	6100.50	
RR-89	266364.91	51218.77	6099.68	TOP OF FES

P-131 (UPSTREAM) RIPRAP CONTROL POINTS

CP	N	E	ELEV	DESCRIPTION
RR-90	265695.24	51706.26	6021.85	TOP OF FES
RR-91	265695.03	51704.96	6022.07	
RR-92	265696.77	51700.31	6022.88	EDGE OF EX ROAD
RR-93	265714.48	51676.61	6024.72	EDGE OF EX ROAD
RR-94	265718.17	51678.97	6024.99	
RR-95	265718.24	51679.43	6025.00	
RR-96	265717.67	51681.40	6025.00	
RR-97	265706.27	51702.64	6021.97	
RR-98	265710.17	51706.79	6023.26	
RR-99	265708.63	51711.29	6022.90	
RR-100	265704.65	51716.94	6022.42	
RR-101	265695.10	51708.17	6021.85	TOP OF FES

P-130 (UPSTREAM & DOWNSTREAM)
TURF REINFORCMENT MAT CONTROL POINTS

CP	N	E	ELEV	DESCRIPTION
TRM-1	266049.36	51299.69	6064.45	UPSTREAM HEADWALL
TRM-2	266067.68	51293.14	6065.07	
TRM-3	266070.72	51298.58	6066.86	
TRM-4	266055.03	51309.79	6065.59	UPSTREAM HEADWALL
TRM-5	266023.92	51325.93	6062.34	DOWNSTREAM HEADWALL
TRM-6	266019.98	51327.57	6062.00	
TRM-7	266010.73	51330.64	6061.00	
TRM-8	266004.47	51332.11	6060.00	
TRM-9	265994.50	51314.26	6066.60	
TRM-10	266016.1192	51311.95631	6066.65	DOWNSTREAM HEADWALL

LION POINT EMBANKEMENT

CP	N	E	ELEV	DESCRIPTION
EMBK-100	54859.61	266937.68	5831.67	EDGE OF RIPRAP
EMBK-101	54859.65	266933.77	5831.30	EDGE OF RIPRAP
EMBK-102	54856.28	266928.32	5830.79	EDGE OF RIPRAP
EMBK-103	54854.77	266921.99	5830.19	EDGE OF RIPRAP
EMBK-104	54843.47	266922.33	5829.95	EDGE OF RIPRAP
EMBK-105	54826.03	266905.76	5828.10	EDGE OF RIPRAP
EMBK-106	54820.00	266912.11	5828.48	EDGE OF RIPRAP
EMBK-107	54818.77	266910.94	5827.80	EDGE OF RIPRAP
EMBK-108	54718.11	266926.12	5832.22	EDGE OF RIPRAP
EMBK-109	54714.05	266934.55	5835.97	EDGE OF RIPRAP
EMBK-110	54730.99	266936.87	5833.49	EDGE OF RIPRAP
EMBK-111	54737.05	266935.42	5832.02	EDGE OF RIPRAP
EMBK-112	54742.86	266942.15	5832.05	EDGE OF RIPRAP
EMBK-113	54758.13	266952.55	5832.05	EDGE OF RIPRAP
EMBK-114	54773.69	266958.45	5832.15	EDGE OF RIPRAP
EMBK-115	54774.53	266965.56	5835.71	EDGE OF RIPRAP

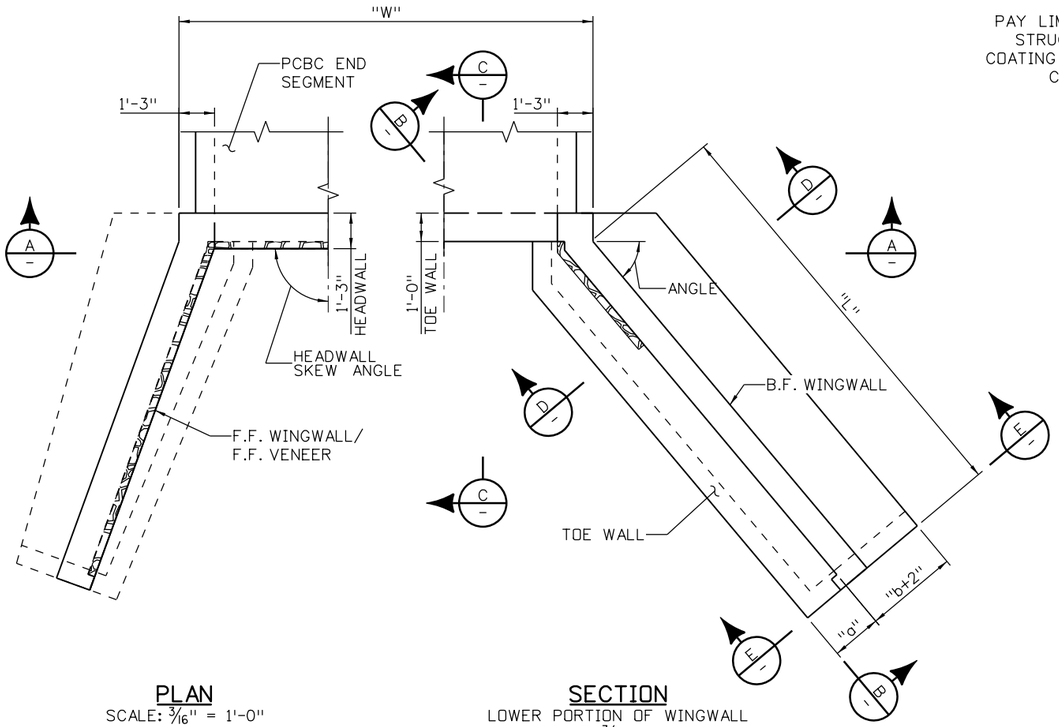

PLAN
SCALE: 3/16" = 1'-0"

SECTION
LOWER PORTION OF WINGWALL
SCALE: 3/16" = 1'-0"

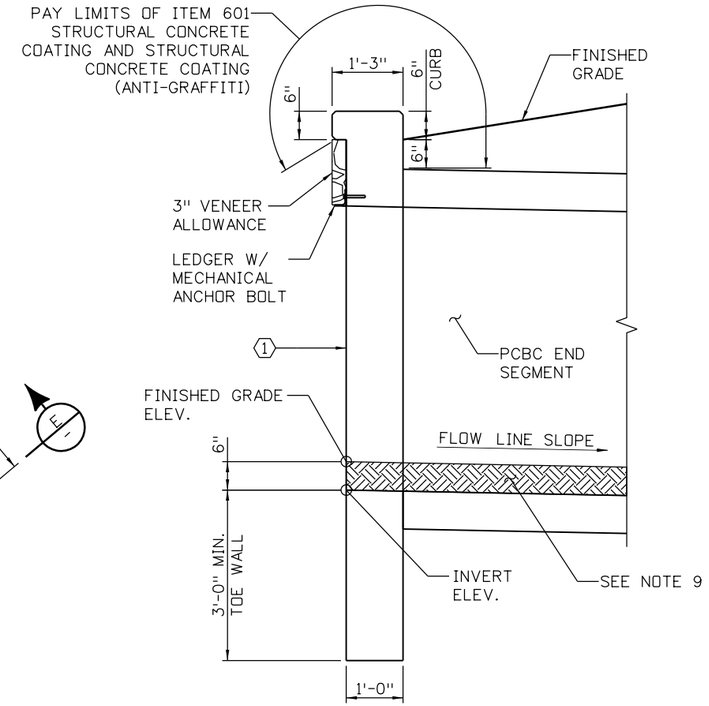

SECTION C
SCALE: 3/8" = 1'-0"

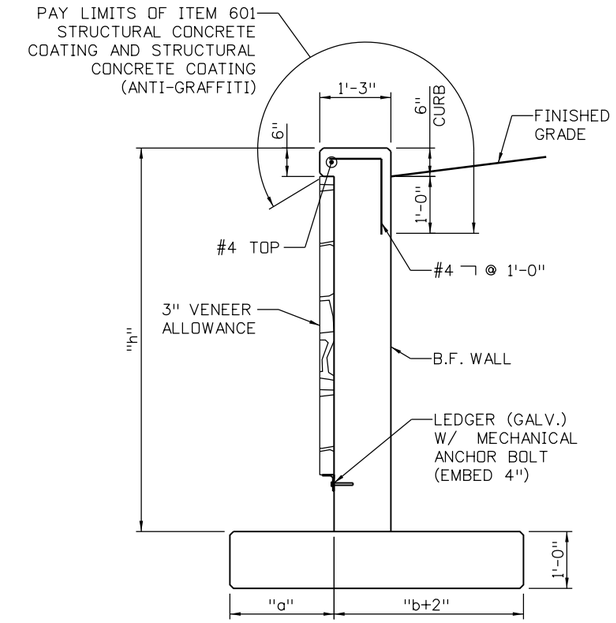

SECTION D
TOE WALL NOT SHOWN
SCALE: 3/8" = 1'-0"

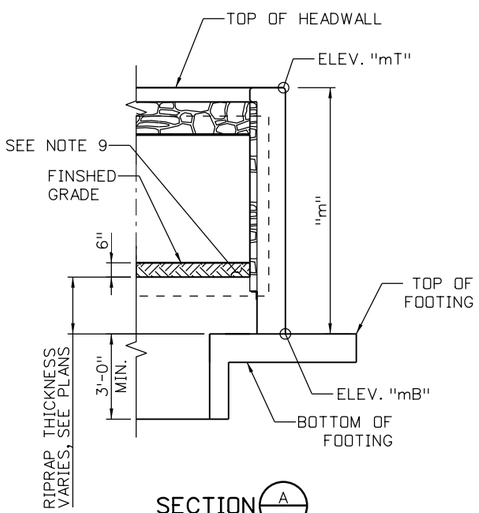

SECTION A
SCALE: 3/16" = 1'-0"

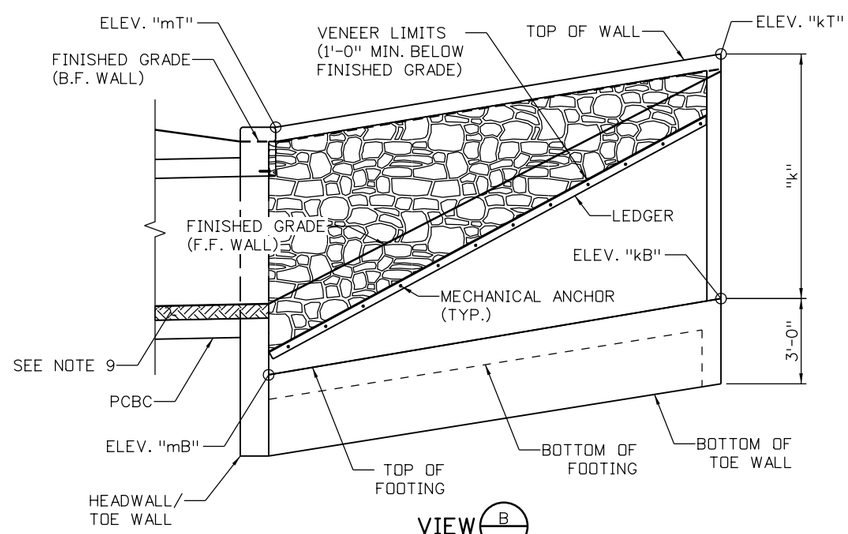

VIEW B
SCALE: 3/16" = 1'-0"

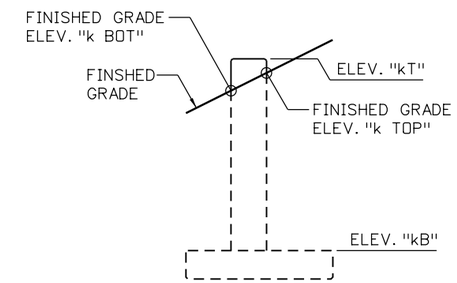

VIEW E
SCALE: 3/16" = 1'-0"

NOTES:

1. FOR REINFORCING AND ADDITIONAL INFORMATION, REFER TO CDOT STANDARD PLAN NO. M-206-1, M-601-1, M-601-20, AND M-603-3.
2. FOR ARCHITECTURAL DETAILS, SEE STRUCTURES PLANS.
3. SEE HEADWALL AND WINGWALL DATA TABLE FOR PARAMETER VALUES.
4. TOE WALL MAY BE OMITTED WHEN FOOTINGS ARE ON BEDROCK AS PERMITTED BY THE ENGINEER.
5. ALL CONCRETE SHALL BE CONCRETE CLASS D.
6. FOR LEDGER AND MECHANICAL ANCHORS, SEE STRUCTURES PLANS.
7. STRUCTURAL CONCRETE COATING SHALL BE DARK BROWN, FEDERAL STANDARD 595C COLOR NO. 30045 OR APPROVED EQUAL.
8. STRUCTURAL CONCRETE COATING LIMITS ALSO APPLY AT END OF HEADWALL/WINGWALL.
9. 6" NATIVE SOIL (IF PRESENT).

KEYNOTES:

1. F.F. HEADWALL IS VERTICAL.

100% SET

CALL UTILITY NOTIFICATION CENTER OF COLORADO
811
CALL 2-BUSINESS DAYS IN ADVANCE BEFORE YOU DIG, GRADE, OR EXCAVATE FOR THE MARKING OF UNDERGROUND MEMBER UTILITIES

REVISIONS: NO.	DATE	REVISION DESCRIPTION:

BOULDER COUNTY TRANSPORTATION DEPARTMENT
ENGINEERING DIVISION
Michael Baker INTERNATIONAL

DESIGNED:	CAD:	CHECKED:	DATE:
DLT	BMT	SLS	11/04/16

WAGON WHEEL GAP ROAD
TYPICAL PRECAST BOX CULVERT END DETAILS

PROJECT NO: 4043.SEPT12C34 SHEET NO: 96

edgar.robles 7:00:24 PM 11/4/2016 pw:\\DCPWAPP1.bkr.mbakercorp.com:pwprod\Documents\Projects\Lakewood_Office\Boulder_County_Emergency_Transportation\T04\08_Sheet_Files\02_Hydraulics\DGN\Wagon_Wheel_Gap_Hydr_Det10.dgn

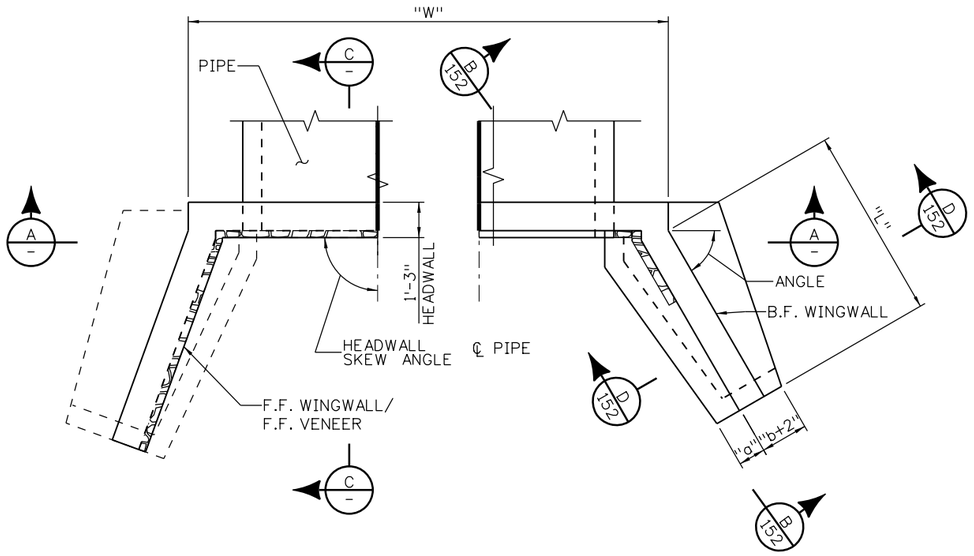

PLAN
SCALE: 3/16" = 1'-0"

SECTION
LOWER PORTION OF WINGWALL
SCALE: 3/16" = 1'-0"

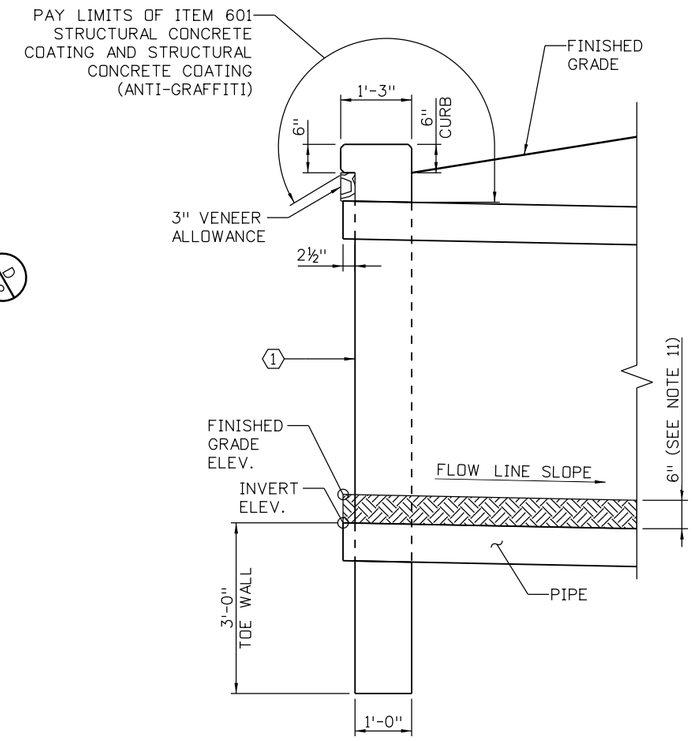

SECTION C
SCALE: 3/8" = 1'-0"

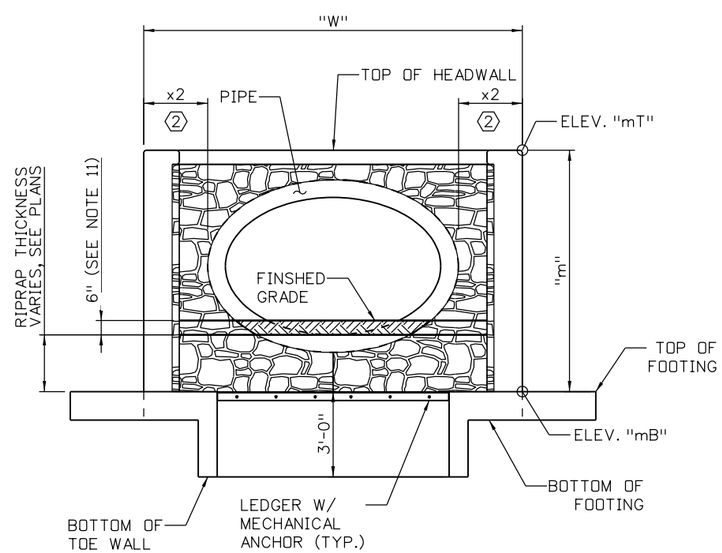

SECTION A
SCALE: 3/16" = 1'-0"

NOTES:

1. NOT ALL REINFORCING AND DETAILS SHOWN. FOR ADDITIONAL INFORMATION, SEE CDOT STANDARD PLAN NO. M-206-1, M-601-10, AND M-601-20.
2. FOR ARCHITECTURAL DETAILS, SEE STRUCTURES PLANS.
3. SEE HEADWALL AND WINGWALL DATA TABLE FOR PARAMETER VALUES.
4. TOE WALL MAY BE OMITTED WHEN FOOTINGS ARE ON BEDROCK AS PERMITTED BY THE ENGINEER.
5. ALL CONCRETE SHALL BE CONCRETE CLASS D.
6. x2 DIMENSION AS SHOWN ON CDOT STANDARD PLAN NO. M-601-10 SHALL BE FOR THE WIDTH OF THE PIPE.
7. FOR LEDGER DETAILS, SEE TYPICAL PRECAST BOX CULVERT END DETAILS SHEET.
8. FOR LEDGER AND MECHANICAL ANCHORS, SEE STRUCTURAL PLANS.
9. STRUCTURAL CONCRETE COATING SHALL BE DARK BROWN, FEDERAL STANDARD 595C COLOR NO. 30045 OR APPROVED EQUAL.
10. STRUCTURAL CONCRETE COATING LIMITS ALSO APPLY AT END OF HEADWALL/WINGWALL AND EXPOSED END OF PIPE.
11. NATIVE SOIL (IF PRESENT). NOT ALL CULVERTS HAVE 6" OF NATIVE SOIL FILL. SEE HEADWALL AND WINGWALL DATA TABLE FOR INVERT AND FINISHED GRADE ELEVATIONS.

KEYNOTES:

1. F.F. HEADWALL IS VERTICAL.
2. PROVIDE x2 DIMENSION FOR BOTH FRONT AND BACK FACE OF HEADWALL AT LIMITS OF PIPE.

100% SET

CALL UTILITY NOTIFICATION CENTER OF COLORADO
811
CALL 2-BUSINESS DAYS IN ADVANCE BEFORE YOU DIG, GRADE, OR EXCAVATE FOR THE MARKING OF UNDERGROUND MEMBER UTILITIES

REVISIONS: NO.	DATE	REVISION DESCRIPTION:

BOULDER COUNTY TRANSPORTATION DEPARTMENT
ENGINEERING DIVISION
Michael Baker INTERNATIONAL

DESIGNED:	CAD:	CHECKED:	DATE:
DLT	BMT		

WAGON WHEEL GAP ROAD
TYPICAL ELLIPTICAL CULVERT END DETAILS

PROJECT NO: 4043.SEPT12C34 | SHEET NO: 97

edgar.robles 7:00:41 PM 11/4/2016 pw:\\DCPWAPP1.bkr.mbakercorp.com:pwprod\Documents\Projects\Lakewood_Office\Boulder_County_Emergency_Transportation\T04\08_Sheet_Files\02_Hydraulics\DGN\Wagon_Wheel_Gap_Hydr_Det11.dgn

HEADWALL AND WINGWALL DATA TABLE

HEADWALL	CULVERT CL NORTHING	CULVERT CL EASTING	ELEV. mT	INVERT ELEV	FINISHED GRADE ELEV.	SKEW ANGLE (D M S)	W (FEET)	WINGWALL	ANGLE (D M S)	L (FEET)	ELEV. mT	ELEV. mB	m (FEET)	FINISHED GRADE ELEV. m TOP	FINISHED GRADE ELEV. m BOT	ELEV. kT	ELEV. kB	k (FEET)	FINISHED GRADE ELEV. k TOP	FINISHED GRADE ELEV. k BOT
								A1	45° 00'00"	15.25	6010.25	5999.08	11.17	6009.75	6001.58	6010.47	6000.61	9.87	6009.97	6009.80
A	265531.024	51816.848	6010.25	6001.58	6001.58	90° 00'00"	9.50													
								A2	45° 00'00"	19.50	6010.25	5999.08	11.17	6009.75	6001.58	6009.80	6001.03	8.77	6009.30	6009.13
								B1	70° 00'00"	18.50	6009.17	5998.00	11.17	6008.67	6000.50	6006.27	5999.85	6.42	6005.77	6005.60
B	265501.923	51854.424	6009.17	6000.50	6000.50	90° 00'00"	9.50													
								B2	45° 00'00"	11.50	6009.17	5998.00	11.17	6008.67	6000.50	6004.61	5999.15	5.46	6004.11	6003.94
								F1	90° 00'00"	16.00	5845.67	5834.17	11.50	5845.17	5836.67	5839.54	5834.97	4.57	5839.04	5838.77
F	266977.734	54637.683	5845.67	5835.67	5836.67	90° 00'00"	16.50													
								F2	23° 00'00"	16.00	5845.67	5834.17	11.50	5845.17	5836.67	5840.01	5834.87	5.14	5839.51	5838.67
								G1	10° 00'00"	19.00	5842.83	5831.33	11.50	5842.33	5833.83	5834.52	5829.59	4.93	5834.02	5833.39
G	266941.547	54659.212	5842.83	5832.83	5833.83	90° 00'00"	16.50													
								G2	20° 00'00"	20.00	5842.83	5831.33	11.50	5842.33	5833.83	5834.51	5829.58	4.93	5834.01	5833.38
								H1	50° 00'00"	36.75	5957.28	5941.93	15.35	5956.78	5945.93	5957.07	5945.61	11.46	5956.57	5956.07
H	265534.998	52734.905	5957.28	5944.93	5945.93	90° 00'00"	32.58													
								H2	40° 00'00"	31.00	5957.28	5941.93	15.35	5956.78	5945.93	5956.50	5945.03	11.47	5956.00	5956.00
								I1	90° 00'00"	20.00	5950.81	5936.54	14.27	5949.56	5940.54	5944.55	5938.37	6.18	5944.05	5943.67
I	265660.284	52783.129	5950.81	5939.54	5940.54	90° 00'00"	32.58													
								I2	70° 00'00"	20.00	5950.81	5936.54	14.27	5950.31	5940.54	5948.92	5938.54	10.38	5948.42	5948.04
								J1	90° 00'00"	14.00	5915.79	5902.96	12.83	5915.29	5907.29	5916.03	5904.36	11.67	5915.53	5914.53
J	266219.795	53224.655	5915.79	5905.96	5907.29	90° 00'00"	36.00													
								J2	80° 00'00"	19.83	5915.79	5902.96	12.83	5915.29	5907.29	5911.50	5904.85	6.65	5911.00	5910.48
								K1	75° 00'00"	36.50	5910.70	5897.87	12.83	5910.20	5902.20	5904.85	5898.55	6.30	5904.35	5903.88
K	266219.827	53309.085	5910.70	5900.87	5902.20	90° 00'00"	36.00													
								K2	45° 00'00"	19.00	5910.70	5897.87	12.83	5910.20	5902.20	5908.50	5899.77	8.73	5908.00	5908.00
N	266764.100	55054.692	5825.80	5811.80	5813.80	90° 00'00"	24.58	N1	30° 00'00"	40.00	5825.80	5808.80	17.00	5825.30	5813.80	5823.59	5812.80	10.79	5823.09	5822.53
O	266746.355	55268.457	5819.97	5803.42	5805.42	90° 00'00"	24.58	O1	90° 00'00"	32.25	5817.42	5800.42	17.00	5816.92	5805.42	5808.95	5800.31	8.64	5808.45	5807.31

100% SET

CALL UTILITY NOTIFICATION CENTER OF COLORADO
811
CALL 2-BUSINESS DAYS IN ADVANCE BEFORE YOU DIG, GRADE, OR EXCAVATE FOR THE MARKING OF UNDERGROUND MEMBER UTILITIES

REVISIONS:	NO.	DATE	REVISION DESCRIPTION:

Boulder County

Michael Baker INTERNATIONAL

BOULDER COUNTY TRANSPORTATION DEPARTMENT
ENGINEERING DIVISION

DESIGNED:	CAD:	CHECKED:	DATE:
BMC	BMM	DLT	11/04/16

WAGONWHEEL GAP ROAD
HEADWALL AND WINGWALL DATA TABLE

PROJECT NO: 4043,SEPT12C34 SHEET NO: 98

edgar.robles 7:00:57 PM 11/4/2016 pw:\\DCPWAPP1.bkr.mbakercorp.com:pwprod\Documents\Projects\Lakewood_Office\Boulder_County_Emergency_Transportation\T04\08_Sheet_Files\02_Hydraulics\DGN\Wagon_Wheel_Gap_Hydr_Det12.dgn

PIPE CULVERT HEADWALL DATA TABLE

HEADWALL	CULVERT CL NORTHING	CULVERT CL EASTING	SKEW ANGLE (D M S)	H (FEET)	T (FEET)	W1 (FEET)	W2 (FEET)	L1 (FEET)	L2 (FEET)	ELEV. mT	INVERT ELEV	ELEV A	ELEV B	ELEV C	ELEV D
C	265552.150	52124.872	108° 14'22"	4.72	1.89	2.00	1.35	5.50	7.30	5986.76	5983.54	5985.62	5983.54	5983.54	5986.59
D	265008.779	51586.381	90° 00'00"	4.93	1.97	2.83	1.50	12.92	12.92	6022.00	6018.57	6020.34	6018.57	6018.57	6021.00
E	266739.253	54424.740	97° 38'40"	4.73	1.89	2.00	2.50	8.00	10.00	5854.95	5851.72	5853.80	5851.72	5851.72	5854.63
P	266591.555	53824.968	108° 34'52"	5.45	2.18	2.62	2.60	6.75	7.50	5890.43	5886.48	5889.41	5886.48	5886.48	5889.81
Q	266613.861	54125.013	100° 00'42"	4.91	1.96	1.93	2.00	6.00	8.33	5877.99	5874.58	5876.52	5874.58	5874.58	5877.79
L	266051.855	51304.161	94° 16'54"	7.50	3.00	1.50	0.00	6.46	5.12	6065.45	6060.08	6065.58	6060.08	6060.08	6064.45
M	266020.020	51318.941	94° 16'54"	9.97	3.99	1.50	0.00	8.00	8.00	6065.04	6058.68	6066.65	6058.68	6058.68	6062.34

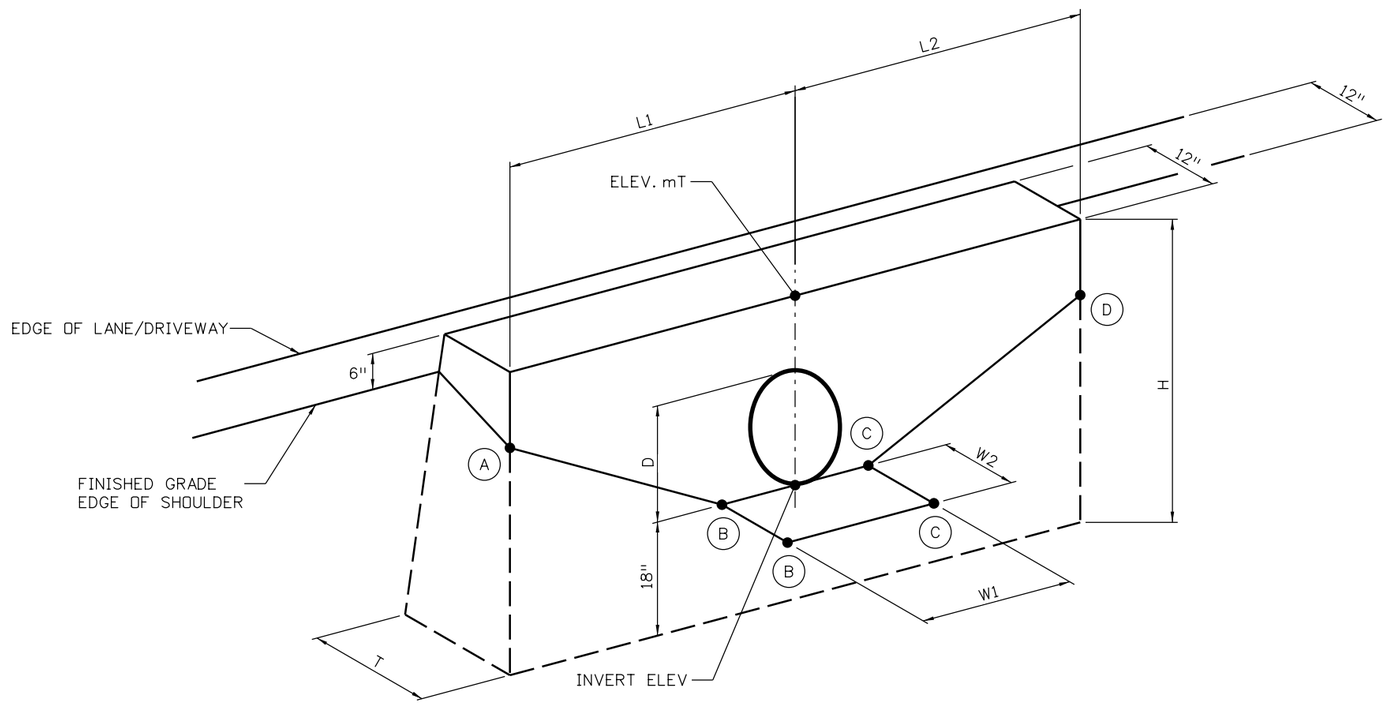

PERSPECTIVE

PIPE CULVERT HEADWALL

NOTES:

1. FOR ADDITIONAL INFORMATION, MATERIAL AND DIMENSIONS, REFER TO CDOT STANDARD PLAN NO. M-206-12.
2. SEE PIPE CULVERT HEADWALL DATA TABLE FOR PARAMETER VALUES.
3. ELEV. mT IS TAKEN AT THE TOP OF HEADWALL ON THE CENTERLINE OF THE PIPE CULVERT. THE TOP OF HEADWALL SHALL BE CONSTRUCTED 6" +/- ABOVE EDGE OF PAVEMENT IN ALL OTHER AREAS NOT NOTED.
4. ALL CONCRETE SHALL BE CLASS B.

100% SET

CALL UTILITY NOTIFICATION CENTER OF COLORADO
811
CALL 2-BUSINESS DAYS IN ADVANCE BEFORE YOU DIG, GRADE, OR EXCAVATE FOR THE MARKING OF UNDERGROUND MEMBER UTILITIES

REVISIONS: NO.	DATE	REVISION DESCRIPTION:

Boulder County

Michael Baker INTERNATIONAL

BOULDER COUNTY TRANSPORTATION DEPARTMENT
ENGINEERING DIVISION

DESIGNED:	CAD:	CHECKED:	DATE:
BMM	BMM	SLS	11/04/16

WAGONWHEEL GAP ROAD
PIPE CULVERT HEADWALL DATA TABLE

PROJECT NO: 4043.SEPT12C34 SHEET NO: 99

edgar.robles 7:01:14 PM 11/4/2016 pw:\\DCPWAPP1bkr.mbakercorp.com:pwprod\Documents\Projects\Lakewood_Office\Boulder_County_Emergency_Transportation\T04\08_Sheet_Files\02_Hydraulics\DGN\Wagon_Wheel_Gap_Hydr_Det13.dgn

GENERAL NOTES:

ALL CONSTRUCTION SHALL BE IN ACCORDANCE WITH COLORADO DEPARTMENT OF TRANSPORTATION STANDARD SPECIFICATIONS FOR ROAD AND BRIDGE CONSTRUCTION 2011 AS MODIFIED BY PROJECT SPECIAL PROVISIONS, SUPPLEMENTAL SPECIFICATIONS, AND THESE DRAWINGS.

ALL WORK IN AND AROUND CREEKS, DITCHES, OR IRRIGATION CANALS SHALL BE PERFORMED IN ACCORDANCE WITH SECTION 107 AND 108 OF THE PROJECT SPECIFICATIONS. REFER TO THESE SECTIONS FOR CONTROL OF WATER AND CONSTRUCTION LIMITATIONS.

ALL CONSTRUCTION PERMITS, INCLUDING DEWATERING, SHALL BE OBTAINED BY THE CONTRACTOR.

THE CONTRACTOR SHALL BE RESPONSIBLE FOR THE STABILITY OF THE STRUCTURE DURING CONSTRUCTION.

STATIONS, ELEVATIONS, AND DIMENSIONS CONTAINED IN THESE PLANS ARE CALCULATED FROM A RECENT FIELD SURVEY. THE CONTRACTOR SHALL VERIFY ALL DEPENDENT DIMENSIONS IN THE FIELD BEFORE ORDERING OR FABRICATING ANY MATERIAL.

ALL LONGITUDINAL AND TRANSVERSE DIMENSIONS ARE MEASURED HORIZONTALLY AND DO NOT INCLUDE ANY CORRECTIONS FOR GRADE.

THE INFORMATION SHOWN ON THESE PLANS CONCERNING THE TYPE AND LOCATION OF UNDERGROUND UTILITIES IS NOT GUARANTEED TO BE ACCURATE OR ALL INCLUSIVE. THE CONTRACTOR IS RESPONSIBLE FOR MAKING THEIR OWN DETERMINATION AS TO THE TYPE AND LOCATION OF UNDERGROUND UTILITIES AS MAY BE NECESSARY TO AVOID DAMAGE THERETO. THE CONTRACTOR SHALL CONTACT THE UTILITY NOTIFICATION CENTER OF COLORADO AT 811 (1-800-922-1987) AT LEAST 3 DAYS (2 DAYS NOT INCLUDING THE DAY OF NOTIFICATION) PRIOR TO ANY EXCAVATION OR OTHER EARTHWORK.

EXCEPT AS SHOWN IN THE PLANS, STRUCTURE EXCAVATION AND BACKFILL SHALL BE IN ACCORDANCE WITH CDOT STANDARD PLAN NO. M-206-1.

LEVELING PADS ARE UNLAMINATED BEARINGS. THEY SHALL BE CUT OR MOLDED FROM AASHTO ELASTOMER GRADE 3, 4, OR 5 AS DESCRIBED IN TABLES 705-1 AND 705-2 WITH A DURAMETER (SHORE "A") HARDNESS OF 60.

FOR ROADWAY GEOMETRICS, REMOVALS, UTILITY INFORMATION, AND SIGN DETAILS, REFER TO ROADWAY PLANS.

FOR FINISHED GRADING REFER TO DRAINAGE PLANS.

GEOTECHNICAL INFORMATION AND RECOMMENDATIONS CAN BE FOUND IN THE PRELIMINARY DRAFT GEOTECHNICAL AND PAVEMENT INVESTIGATION REPORT, FOUR MILE CANYON, TASK ORDER 4, WAGONWHEEL GAP ROAD, BOULDER COUNTY, COLORADO, DATED MARCH 3, 2016.

ALL ACRONYMS AND ABBREVIATIONS ARE CONSISTENT WITH CDOT STANDARD PLAN NO M-100-2, UNLESS NOTED OTHERWISE.

B.F. = BACK FACE	E.F. = EACH FACE
CRS-SLP = CROSS SLOPE	RD. = ROAD
EA. = EACH	U.S.O. = UNLESS SHOWN OTHERWISE

BOW MOUNTAIN BRIDGE DESCRIPTION:

1 SPAN (42'-6") BRIDGE,
CONCRETE SLAB AND PRESTRESSED CONCRETE
BOX GIRDER, SIDE BY SIDE

BOW MOUNTAIN ROAD OVER FOURMILE CANYON CREEK
24'-0" ROADWAY CURB TO CURB, 90° 00'00" SKEW
BRIDGE RAIL TYPE 3 LT. & RT.

LEE HILL APPROACH BRIDGE DESCRIPTION:

1 SPAN (57'-6") BRIDGE,
CONCRETE SLAB AND PRESTRESSED CONCRETE
BOX GIRDER, SIDE BY SIDE

WAGONWHEEL GAP ROAD OVER FOURMILE CANYON CREEK
24'-0" ROADWAY CURB TO CURB, 90° 00'00" SKEW
BRIDGE RAIL TYPE 3 LT. & RT.

REINFORCED CONCRETE NOTES:

THE FINAL FINISH FOR THE SURFACES OF CURBS SHALL BE CLASS 2. ALL OTHER EXPOSED CONCRETE SURFACES SHALL RECEIVE A CLASS 1 FINAL FINISH TO ONE FOOT BELOW FINISHED GRADE, UNLESS NOTED OTHERWISE.

A COLORED STRUCTURAL CONCRETE COATING FINISH SHALL BE REQUIRED, AS SHOWN ON THE PLANS, ON EXPOSED CONCRETE SURFACES. THE COLOR SHALL BE SELECTED FROM TEST PANELS PROVIDED BY THE CONTRACTOR.

EXPOSED CONCRETE CORNERS SHALL BE CHAMFERED 3/4 INCH, UNLESS NOTED OTHERWISE.

EXPANSION JOINT MATERIAL SHALL MEET AASHTO SPECIFICATION M213.

UNLESS APPROVED IN WRITING BY THE DESIGN ENGINEER, CONSTRUCTION JOINTS OTHER THAN THOSE SHOWN IN THE PLANS ARE NOT PERMITTED.

ROUGHENED CONSTRUCTION JOINTS REQUIRE THE CONCRETE SURFACE TO BE EVENLY ROUGHENED TO A MINIMUM AMPLITUDE OF 1/4 INCH.

CONSTRUCTION JOINTS SHALL BE THOROUGHLY CLEANED BEFORE FRESH CONCRETE IS PLACED.

ALL PROVISIONS FOR DECK CONCRETE SHALL ALSO APPLY TO APPROACH SLAB CONCRETE.

GRADE 60 REINFORCING STEEL IS REQUIRED.

ALL REINFORCING SHALL BE EPOXY COATED UNLESS OTHERWISE NOTED. Ⓝ DENOTES NON-COATED REINFORCING.

THE FOLLOWING TABLE GIVES THE MINIMUM LAP SPLICE LENGTH FOR EPOXY REINFORCING BARS PLACED IN ACCORDANCE WITH SUBSECTION 602.06. THESE SPLICE LENGTHS SHALL BE INCREASED BY 25% FOR BARS SPACED AT LESS THAN 6 INCHES ON CENTER OR LESS THAN 3 INCHES OF LATERAL COVER.

BAR SIZE	#4	#5	#6	#7	#8	#9	#10	#11
SPLICE LENGTH FOR CLASS	1'-3"	1'-7"	2'-5"	2'-10"	3'-8"	4'-8"	5'-11"	7'-3"

WHEN THE CONTRACTOR ELECTS TO SUBSTITUTE EPOXY COATED REINFORCEMENT FOR NON-COATED REINFORCING BARS, THE MINIMUM LAP SPLICE SHALL BE AS DESCRIBED ABOVE.

THE FOLLOWING TABLE GIVES THE MINIMUM LAP SPLICE LENGTH FOR NON-COATED REINFORCING BARS PLACED IN ACCORDANCE WITH SUBSECTION 602.06. THESE SPLICE LENGTHS SHALL BE INCREASED BY 25% FOR BARS SPACED AT LESS THAN 6 INCHES ON CENTER OR LESS THAN 3 INCHES OF LATERAL COVER.

BAR SIZE	#4 Ⓝ	#5 Ⓝ	#6 Ⓝ	#7 Ⓝ	#8 Ⓝ	#9 Ⓝ	#10 Ⓝ	#11 Ⓝ
SPLICE LENGTH FOR CLASS	1'-1"	1'-4"	1'-7"	1'-11"	2'-6"	3'-1"	3'-11"	4'-10"

THE ABOVE SPLICE LENGTHS SHALL BE INCREASED BY 20% FOR THREE BAR BUNDLES AND 33% FOR FOUR BAR BUNDLES.

ADJACENT BOX GIRDER BRIDGE NOTES:

ADJACENT BOX GIRDERS ARE CONNECTED AT THEIR INTERFACES BY POURABLE EPOXY GROUT IN THE SHEAR KEYS.

THE SHEAR KEY SURFACES SHALL BE SAND-BLASTED PRIOR TO PLACEMENT OF EPOXY GROUT.

THE AREA AROUND THE SHEAR KEYS SHALL BE KEPT MOIST FOR 24 HOURS PRIOR TO AND A MINIMUM OF 72 HOURS FOLLOWING THE EPOXY GROUT INSTALLATION.

GIRDER LAYOUT IS CENTERED ON THE BRIDGE AND DOES NOT ACCOUNT FOR GIRDERS BEING PLACED PARALLEL TO THE ROADWAY CROSS SLOPE. THE GRID ALIGNS AT BOTTOM OF GIRDER AND DOES NOT REFLECT THE ℄ GIRDER.

INDEX OF DRAWINGS:

WAGONWHEEL GAP ROAD BRIDGES
100-101 GENERAL INFORMATION

BOW MOUNTAIN BRIDGE
102-103 GENERAL LAYOUT
104 ENGINEERING GEOLOGY
105-106 BRIDGE HYDRAULIC INFORMATION
107 CONSTRUCTION LAYOUT
108 FOUNDATION LAYOUT
109 ABUTMENT 1
110 ABUTMENT 2
111 ABUTMENT DETAILS
112-113 WINGWALL DETAILS
114 DECK SLAB DETAILS
115 APPROACH SLAB DETAILS
116-117 BRIDGE DECK ELEVATIONS

LEE HILL APPROACH BRIDGE
118-119 GENERAL LAYOUT
120 ENGINEERING GEOLOGY
121-122 BRIDGE HYDRAULIC INFORMATION
123 CONSTRUCTION LAYOUT
124 FOUNDATION LAYOUT
125 ABUTMENT 1 & 2
126 ABUTMENT DETAILS
127-128 WINGWALL DETAILS
129 DECK SLAB DETAILS
130 APPROACH SLAB DETAILS
131-132 BRIDGE DECK ELEVATIONS

WAGONWHEEL GAP ROAD BRIDGES
133-134 CAISSON DETAILS
135-136 PRESTRESSED CONCRETE BOX
137-138 BRIDGE RAIL TYPE 3
139 ASPHALTIC PLUG JOINT
140 MECHANICALLY STABILIZED BACKFILL

DESIGN DATA:

AASHTO LRFD BRIDGE DESIGN SPECIFICATIONS, SIXTH EDITION WITH INTERIMS THROUGH 2012

DESIGN METHOD: LOAD AND RESISTANCE FACTOR DESIGN (LRFD)

LIVE LOAD: HL-93 (DESIGN TRUCK OR DESIGN TANDEM, AND DESIGN LANE LOAD) OR COLORADO PERMIT VEHICLE

DEAD LOAD: ASSUMES 36 LBS. PER SQ. FT. FOR BRIDGE DECK OVERLAY
ASSUMES 225 LBS. PER LINEAR FT. FOR BRIDGE RAIL TYPE 3

VEHICULAR COLLISION FORCE: TEST LEVEL 2 (TL-2)

SEISMIC ZONE 1

REINFORCED CONCRETE:
CLASS D CONCRETE: f'c = 4,500 psi
REINFORCING STEEL: fy = 60,500 psi
CLASS 2

CAISSON CONCRETE:
CLASS BZ CONCRETE: f'c = 4,500 psi
REINFORCING STEEL: fy = 60,500 psi
CLASS 2

XX
XX
SECTION OR DETAIL IDENTIFICATION
CROSS REFERENCE DRAWING NUMBER
(IF "-", REFERENCE IS TO SAME SHEET)

SUMMARY OF APPROXIMATE QUANTITIES:

ITEM	DESCRIPTION	UNIT	BOW MOUNTAIN BRIDGE					LEE HILL APPROACH BRIDGE					TOTALS
			SUPER-STRUCTURE	ABUTMENT 1	ABUTMENT 2	APPROACH SLABS	SUBTOTAL	SUPER-STRUCTURE	ABUTMENT 1	ABUTMENT 2	APPROACH SLABS	SUBTOTAL	
206	STRUCTURE EXCAVATION	CY		216	481		697		111	75		186	883
206	STRUCTURE BACKFILL (CLASS 1)	CY		151	391		542		156	159		315	857
206	MECHANICAL REINFORCEMENT OF SOIL	CY		148	388		536		154	156		310	846
403	HOT MIX ASPHALT (GRADING SX) (75) (PG 58-28)	TN	20			10	30	26			12	38	68
420	GEOTEXTILE (DRAINAGE) (CLASS 1)	TN		211	183		394		211	183		394	789
503	DRILLED CAISSON (24 INCH)	LF		181	396		577		83	71		154	731
506	SOIL RIPRAP	CY		296	257		552		357	373		730	1,282
515	WATERPROOFING (MEMBRANE)	SY	20			10	30	26			12	38	68
518	BRIDGE EXPANSION JOINT (ASPHALTIC PLUG)	LF		24	24		48		24	24		48	96
601	CONCRETE CLASS D	CY	62.5	58.3	96.7	33.4	250.9	71.0	23.1	23.5	35.4	153.0	403.9
601	STRUCTURAL CONCRETE COATING	SF	1,225	483	897	1,225	3,830	1,225	483	897	1,225	3,830	7,660
601	STRUCTURAL CONCRETE COATING (ANTI-GRAFFITI)	SF	1,225	483	897	1,225	3,830	1,225	483	897	1,225	3,830	7,660
602	REINFORCING STEEL	SF	9,375	8,745	14,505	5,010	37,635	10,650	3,465	3,525	5,310	22,950	60,585
606	BRIDGE RAIL TYPE 3	LF	90			40	130	131			56	187	317
618	PRESTRESSED CONCRETE BOX (DEPTH LESS THAN 32 INCHES)	SF	1,012				1,012	1,342				1,342	2,354
621	TEMPORARY STREAM CROSSING	LS					1					1	2

NOTES:

1. STRUCTURAL CONCRETE COATING (1) SHALL BE BROWN, EQUIVALENT TO FEDERAL STANDARD 595C COLOR NO. 20062.

2 STRUCTURAL CONCRETE COATING (2) SHALL BE GRAY, EQUIVALENT TO FEDERAL STANDARD 595C COLOR NO. 26044.

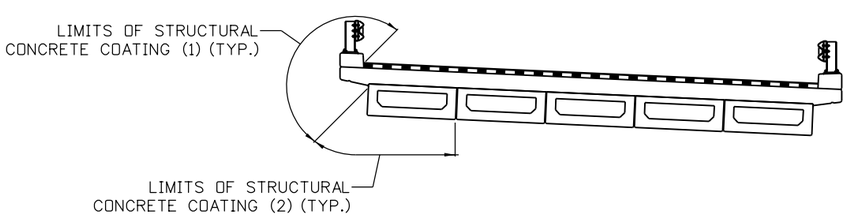

LIMITS OF STRUCTURAL CONCRETE COATING - SUPERSTRUCTURE
SCALE: 3/32" = 1'-0"

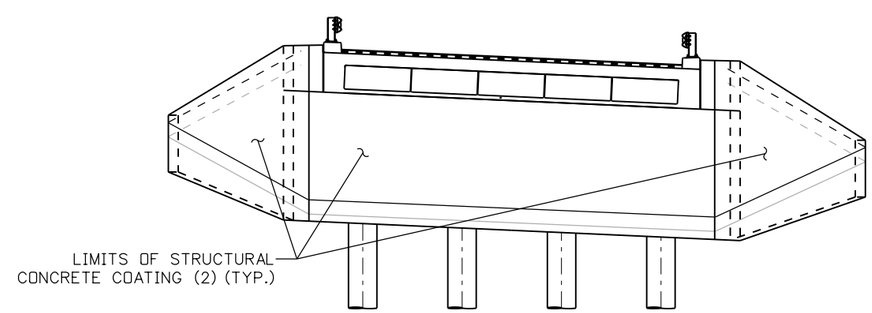

LIMITS OF STRUCTURAL CONCRETE COATING - SUBSTRUCTURE
SCALE: 3/32" = 1'-0"

100% SET

CALL UTILITY NOTIFICATION CENTER OF COLORADO
811
CALL 2-BUSINESS DAYS IN ADVANCE BEFORE YOU DIG, GRADE, OR EXCAVATE FOR THE MARKING OF UNDERGROUND MEMBER UTILITIES

REVISIONS: NO.	DATE	REVISION DESCRIPTION:

BOULDER COUNTY TRANSPORTATION DEPARTMENT
ENGINEERING DIVISION
Michael Baker INTERNATIONAL

DESIGNED:	CAD:	CHECKED:	DATE:
DLT	BMT		11/4/2016

WAGONWHEEL GAP ROAD BRIDGES
GENERAL INFORMATION
(2 OF 2)

PROJECT NO: 4043.SEPT12C34 | SHEET NO: 101

mike.doyle 5:58:42 PM pw:\\DCPWAPP1.bkr.mbakercorp.com:pwprod\Documents\Projects\Lakewood_Office\Boulder_County_Emergency_Transportation\T04\08_Sheet_Files\06_Structures\DGN\Bridges\138200_BRDG_02.dgn

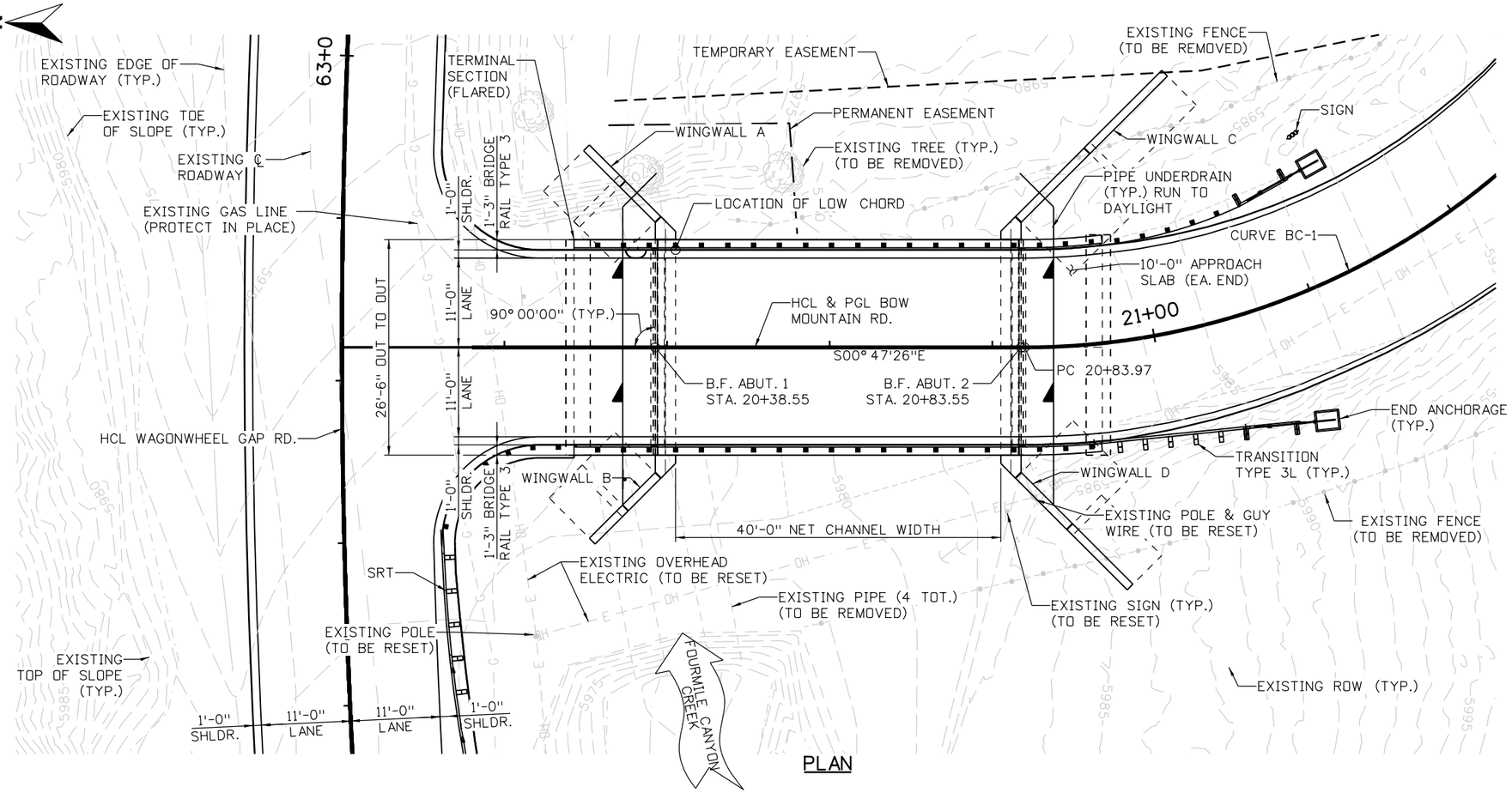

PLAN

NOTES:

1. FOR GUARDRAIL DETAILS REFER TO ROADWAY PLANS.
2. SHORING MAY BE NECESSARY TO FACILITATE A CONSTRUCTION WORK ZONE AND SHALL BE BORNE BY THE CONTRACTOR.
5. CREEK RESTORATION DETAILS HAVE NOT BEEN DETERMINED AT THIS TIME.
6. BOW MOUNTAIN ROAD SHALL BE CLOSED FOR BRIDGE CONSTRUCTION.

KEYNOTES:

1. 1'-0" MIN. FREEBOARD FOR THE 100-YEAR HYDRAULIC GRADE LINE AND ABOVE THE 100-YEAR ENERGY GRADE LINE.
2. ELEVATION SHOWN INCLUDES AN ADDITIONAL ½" GIRDER DEPTH TOLERNACE.

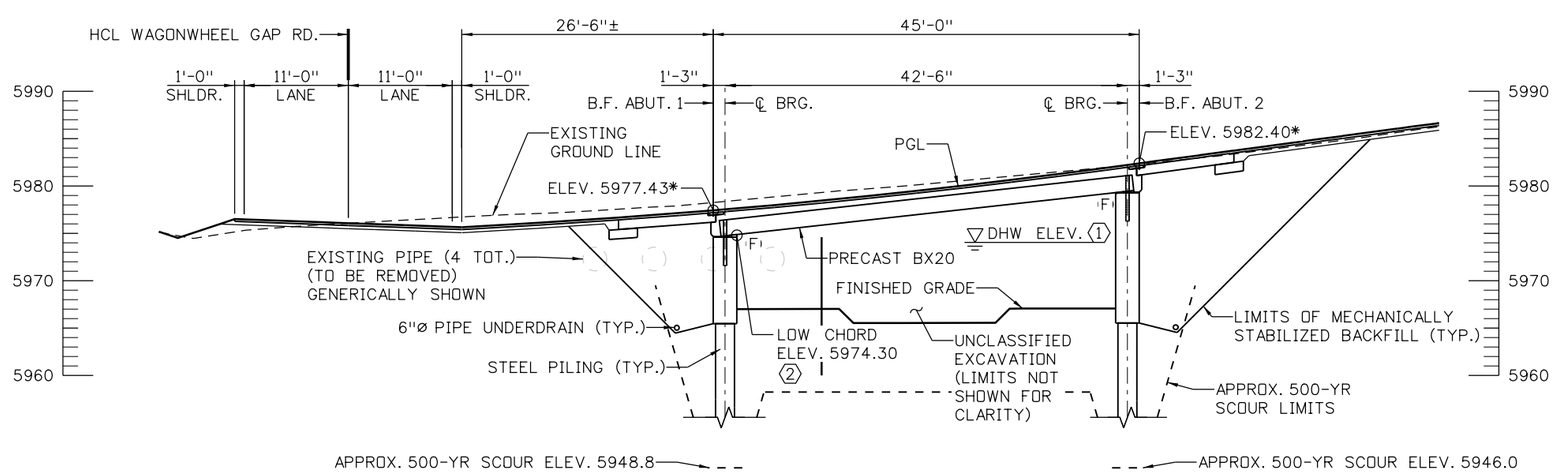

SECTION

TAKEN AT HCL BOW MOUNTAIN RD.

* FINISHED GRADE ELEVATIONS

CURVE BC-1 DATA:

Δ = 52° 40'49" LT.
R = 90.00'
L = 82.75'
T = 44.56'
PI 21+28.53
N 265420.20
E 52272.00

8 0 8 16 FT
SCALE: 1"=16'

100% SET

CALL UTILITY NOTIFICATION CENTER OF COLORADO
811
CALL 2-BUSINESS DAYS IN ADVANCE BEFORE YOU DIG, GRADE, OR EXCAVATE FOR THE MARKING OF UNDERGROUND MEMBER UTILITIES

REVISIONS:	NO.	DATE	REVISION DESCRIPTION:

Boulder County

BOULDER COUNTY TRANSPORTATION DEPARTMENT
ENGINEERING DIVISION

Michael Baker INTERNATIONAL

DESIGNED:	CAD:	CHECKED:	DATE:
DLT	BMT		11/4/2016

BOW MOUNTAIN BRIDGE
GENERAL LAYOUT
(1 OF 2)

PROJECT NO: 4043.SEPT12C34 | SHEET NO: 102

mike.doyle 5:59:10 PM 11/4/2016 pw:\\DCPWAPP1.bkr.mbakercorp.com:pwprod\Documents\Projects\Lakewood_Office\Boulder_County_Emergency_Transportation\T04\08_Sheet_Files\06_Structures\DGN\Bridges\138200_BRDG_04.dgn

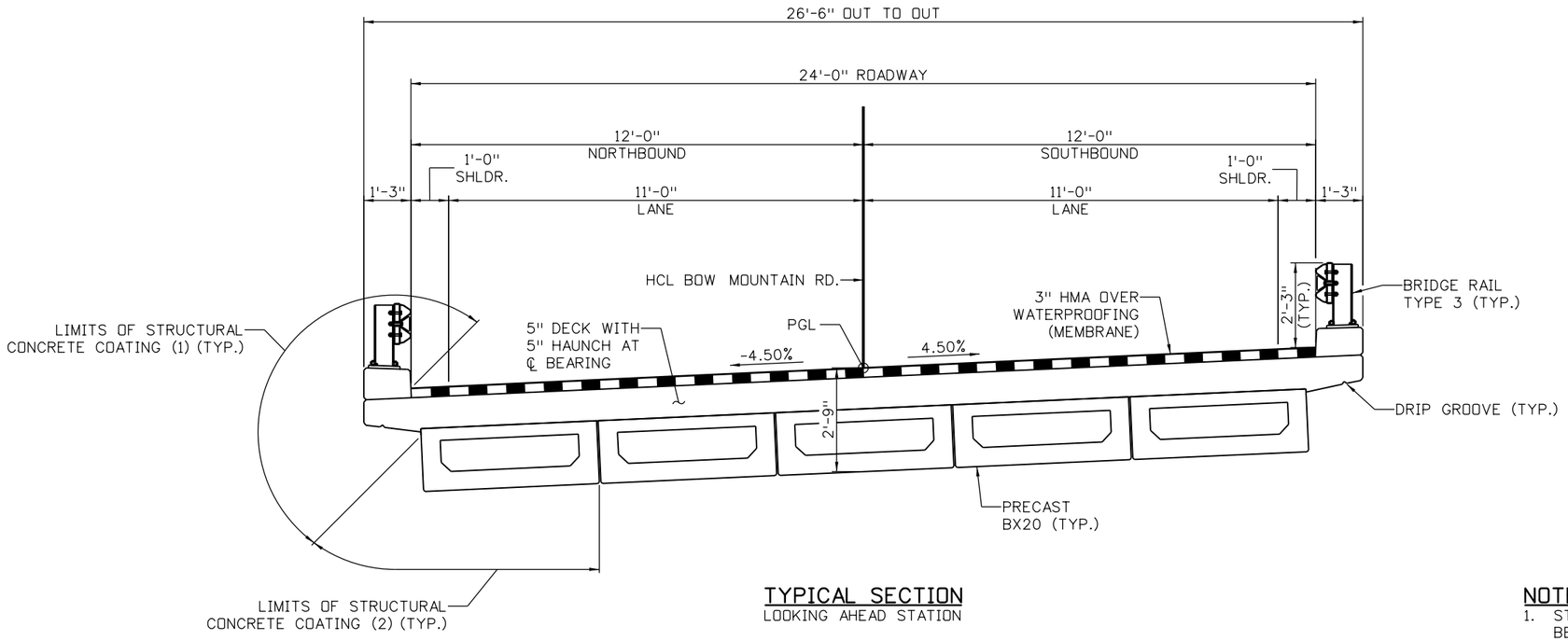

TYPICAL SECTION

LOOKING AHEAD STATION

NOTES:

1. STRUCTURAL CONCRETE COATING (1) SHALL BE BROWN, EQUIVALENT TO FEDERAL STANDARD 595C COLOR NO. 20062.
2. STRUCTURAL CONCRETE COATING (2) SHALL BE GRAY, EQUIVALENT TO FEDERAL STANDARD 595C COLOR NO. 26044.
3. HMA SHALL BE GRADING SX (75) (PG 58-28).

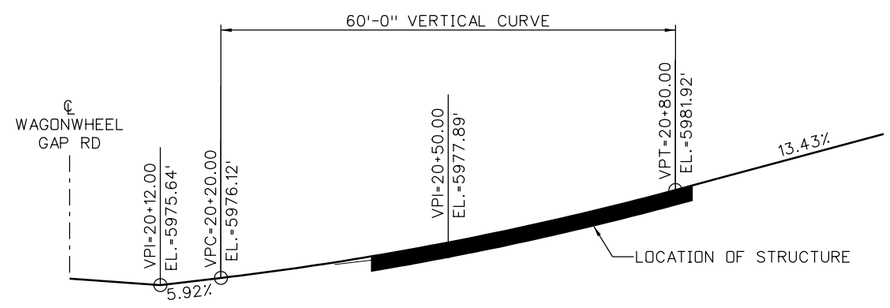

PROFILE GRADE

BOW MOUNTAIN ROAD

10 0 10 20 FT
HORIZONTAL SCALE: 1"=20'

100% SET

CALL UTILITY NOTIFICATION CENTER OF COLORADO
811
CALL 2-BUSINESS DAYS IN ADVANCE BEFORE YOU DIG, GRADE, OR EXCAVATE FOR THE MARKING OF UNDERGROUND MEMBER UTILITIES

REVISIONS:	NO.	DATE	REVISION DESCRIPTION:

Boulder County
Michael Baker INTERNATIONAL

BOULDER COUNTY TRANSPORTATION DEPARTMENT
ENGINEERING DIVISION

DESIGNED:	CAD:	CHECKED:	DATE:
DLT	BMT		11/4/2016

BOW MOUNTAIN BRIDGE
GENERAL LAYOUT
(2 OF 2)

PROJECT NO: 4043.SEPT12C34 | SHEET NO: 103

mike.doyle 5:59:35 PM pw:\\DCPWAPP1.bkr.mbakercorp.com:pwprod\Documents\Projects\Lakewood_Office\Boulder_County_Emergency_Transportation\T04\08_Sheet_Files\06_Structures\DGN\Bridges\138200_BRDG_05.dgn

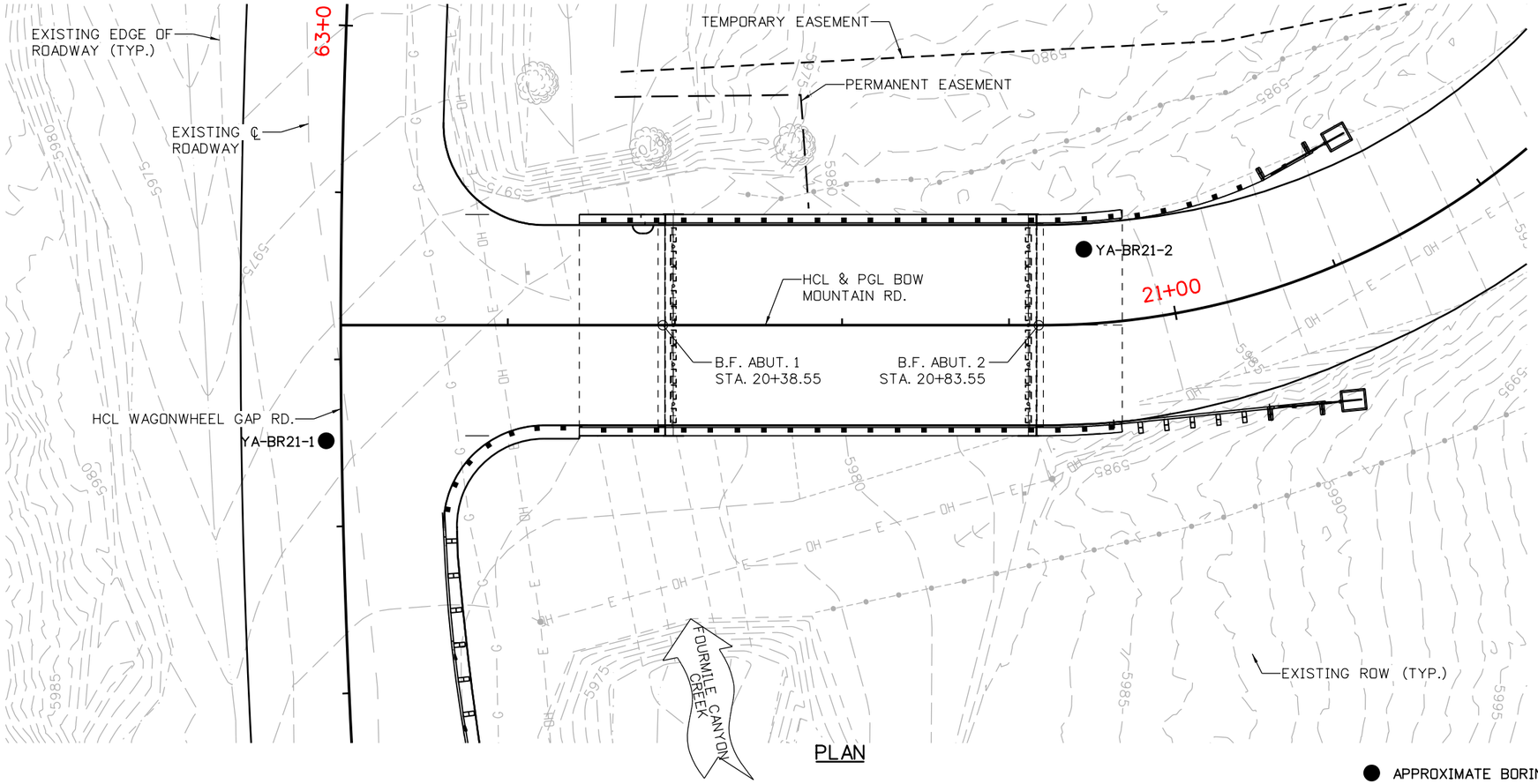

PLAN

N

8 0 8 16 FT
HORIZONTAL SCALE: 1"=16'

LEGEND

- FILL WITH GRAVEL AS MAJOR SOIL
- USCS SILTY SAND
- USCS POORLY-GRADED GRAVEL
- BOULDERS
- USCS SILTY GRAVEL
- GRANITE

● APPROXIMATE BORING LOCATION

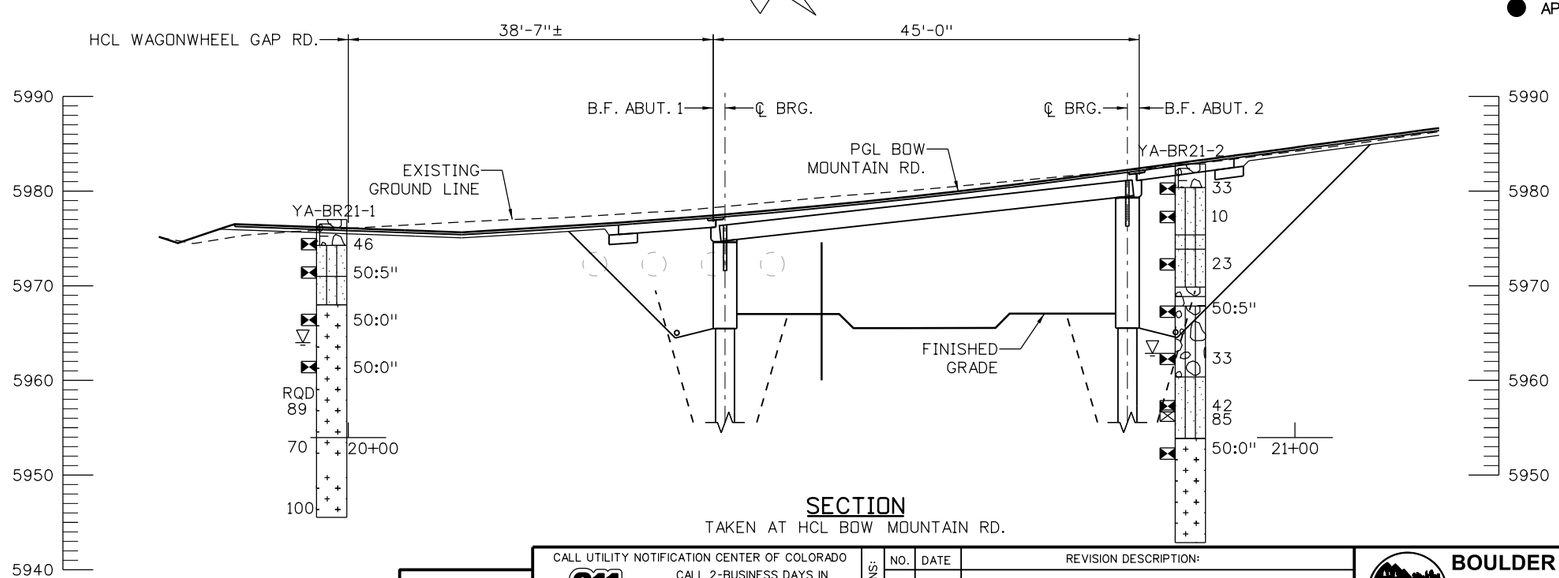

SECTION
TAKEN AT HCL BOW MOUNTAIN RD.

TYPICAL BOREHOLE LOG

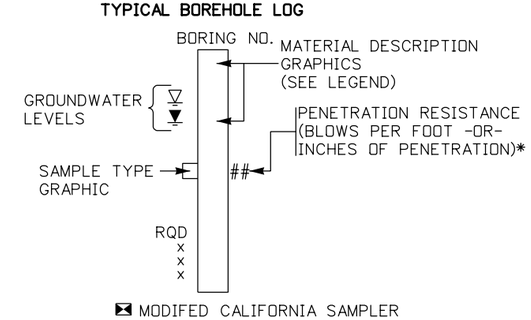

*E.G. A VALUE OF 50/3 OR 50:3 INDICATES THAT 50 BLOWS WERE APPLIED TO THE SAMPLER, WITH A PENETRATION OF 3 INCHES.

Yeh and Associates, Inc.
Consulting Engineers & Scientists

100% SET

CALL UTILITY NOTIFICATION CENTER OF COLORADO
811
CALL 2-BUSINESS DAYS IN ADVANCE BEFORE YOU DIG, GRADE, OR EXCAVATE FOR THE MARKING OF UNDERGROUND MEMBER UTILITIES

REVISIONS:	NO.	DATE	REVISION DESCRIPTION:

Boulder County
Michael Baker INTERNATIONAL

BOULDER COUNTY TRANSPORTATION DEPARTMENT
ENGINEERING DIVISION

DESIGNED:	CAD:	CHECKED:	DATE:
SCS	MJW		11/04/2016

BOW MOUNTAIN BRIDGE
ENGINEERING GEOLOGY

PROJECT NO: 4043.SEPT12C34 | SHEET NO: 104

Mike Walz 11:00:01 AM pw:\\DCPWAPP1.bkr.mbakercorp.com:pwprod\Documents\Projects\Lakewood_Office\Boulder_County_Emergency_Transportation\T04\08_Sheet_Files\01_Geotech\DGN\138200_BRDG_EG01.dgn

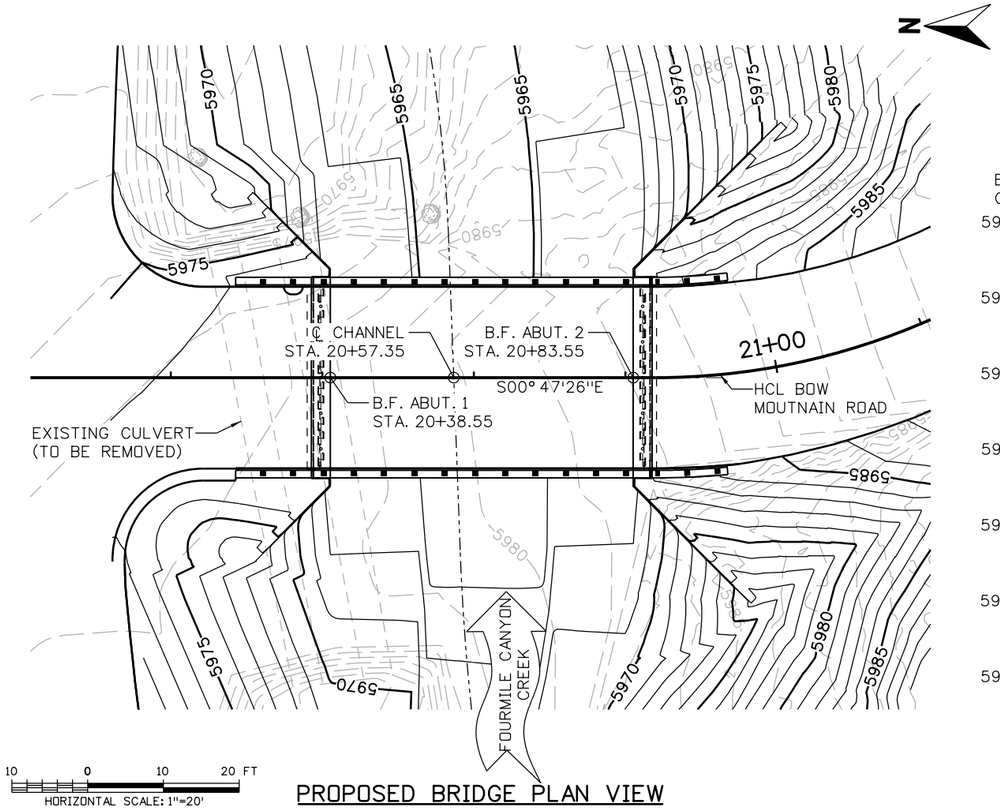

PROPOSED BRIDGE PLAN VIEW

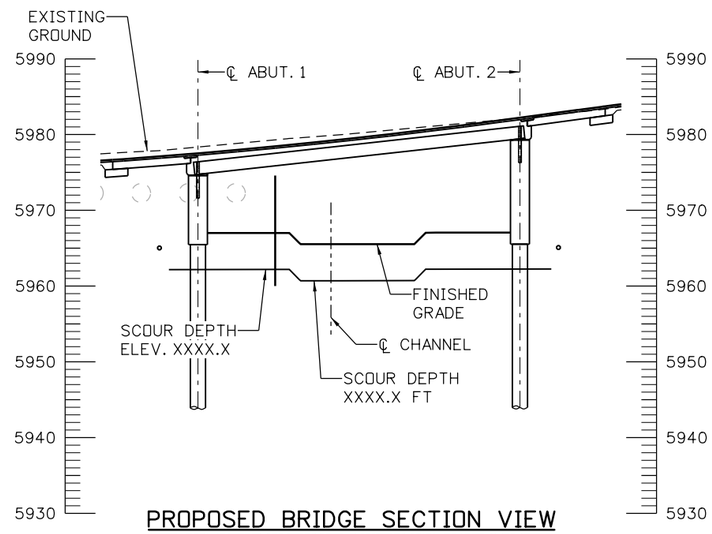

PROPOSED BRIDGE SECTION VIEW

TAKEN ALONG HCL BOW MOUNTAIN ROAD

DATA FOR FOURMILE CANYON CREEK AT BOW MTN. RD.:

DRAINAGE AREA: 68 MI^2

AVERAGE CHANNEL SLOPE: 0.007 FT/FT

CHANNEL BOTTOM MATERIAL:

COHESIVE ☐ NON-COHESIVE ☒

BOTTOM MATERIAL SIZE: CLAY ☒ SILT ☒ SAND ☒ GRAVEL ☒ COBBLES ☐ OTHER ☐

STREAM FORM: STRAIGHT ☐ MEANDERING ☒ BRAIDED ☐

MANNINGS "n" FOR DESIGN:

CHANNEL = 0.040 OVERBANK = 0.040 TO 0.090

DEBRIS: BRUSH ☒ TREES/LOGS ☐ ICE ☐ OTHER ☐

COMPARISON OF HYDRAULICS

	VELOCITY	FREEBOARD	WSEL
EXISTING CULVERT	6.1 FT/S	N/A	6490.1
PROPOSED BRIDGE	6.0 FT/S	N/A	6490.0

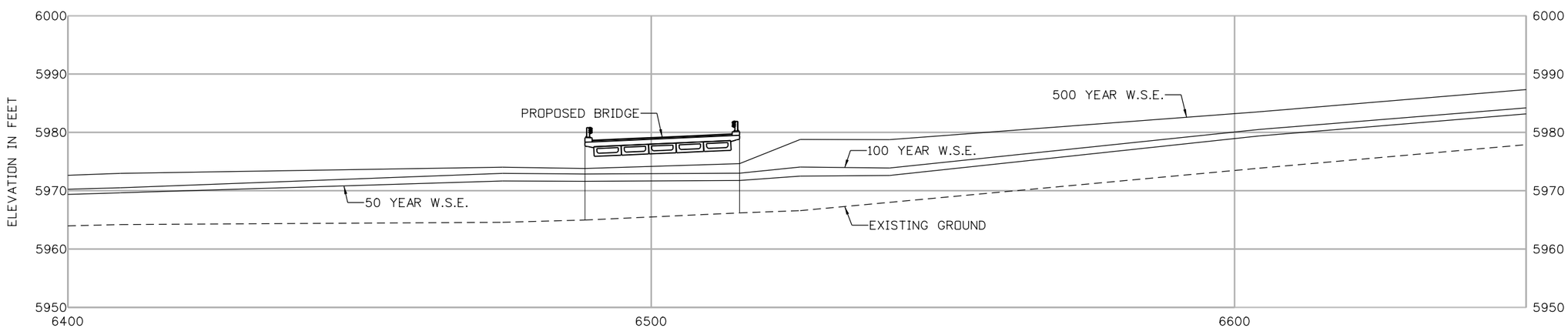

PROFILE OF WATER SURFACE

DISTANCE ALONG CHANNEL CENTERLINE IN FEET

60% SET

CALL UTILITY NOTIFICATION CENTER OF COLORADO
811
CALL 2-BUSINESS DAYS IN ADVANCE BEFORE YOU DIG, GRADE, OR EXCAVATE FOR THE MARKING OF UNDERGROUND MEMBER UTILITIES

REVISIONS: NO.	DATE	REVISION DESCRIPTION:

BOULDER COUNTY TRANSPORTATION DEPARTMENT
ENGINEERING DIVISION

Michael Baker INTERNATIONAL

DESIGNED:	CAD:	CHECKED:	DATE:
CMM	BMT		11/4/2016

BOW MOUNTAIN ROAD
BRIDGE HYDRAULIC INFORMATION (1 OF 2)

PROJECT NO: 4043.SEPT12C34 SHEET NO: 105

mike.doyle 5:59:56 PM pw:\\DCPWAPP1.bkr.mbakercorp.com:pwprod\Documents\Projects\Lakewood_Office\Boulder_County_Emergency_Transportation\T04\08_Sheet_Files\06_Structures\DGN\Bridges\138200_BRDG_08.dgn

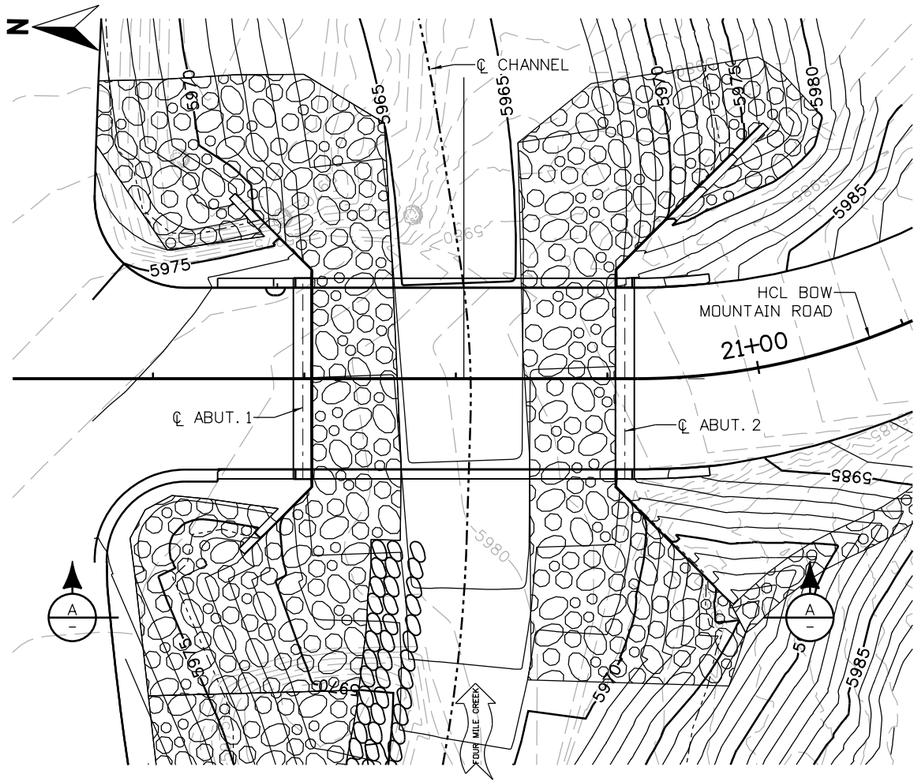

10 0 10 20 FT
HORIZONTAL SCALE: 1"=20'
VERTICAL SCALE: 1"=20'

(24 INCH) RIPRAP LIMITS PLAN

RIPRAP (24 INCH) LIMITS TABLE				
LOCATION		STATION	OFFSET	ELEVATION
ABUTMENT 1	A	20+47.18	41.12	5970.04
	B	20+19.41	41.9	5977.70
	C	20+16.99	21.12	5976.27
	D	20+18.98	17.34	5976.29
	E	20+22.53	15.45	5976.32
	F	20+36.56	17.16	5976.41
	G	20+41.05	14.35	5967.99
	H	20+41.04	14.35	5966.92
	I	20+34.73	18.78	5974.30
	J	20+21.89	17.01	5974.00
	K	20+12.49	30.83	5973.83
	L	20+12.80	39.29	5973.41
	M	20+39.94	40.19	5965.70
	N	20+50.56	33.75	5964.99
	O	20+52.66	21.33	5967.90
	P	20+48.80	21.26	5967.92
ABUTMENT 2	Q	20+69.49	39.77	5969.01
	R	20+92.28	41.14	5977.00
	S	20+94.34	34.36	5976.00
	T	20+93.16	30.27	5976.02
	U	20+81.05	14.34	5968.10
	V	20+81.06	14.32	5967.46
	W	20+89.94	20.03	5980.00
	X	21+17.79	26.26	5980.01
	Y	21+21.22	29.66	5980.01
	Z	21+13.03	39.86	5976.70
	AA	20+77.85	38.95	5965.88
	AB	20+68.20	31.15	5966.00

ALL ELEVATIONS REPRESENT TOP OF RIPRAP

NOTES:

1. SEE TABULATION OF DRAINAGE AND EROSION CONTROL QUANTITIES.
2. SEE FINAL SWMP PLANS FOR EROSION CONTROL BLANKET LOCATIONS.
3. MIX UNIFORMILY 65% RIPRAP BY VOLUME WITH 35% OF APPROVED SOIL BY VOLUME PRIOR TO PLACEMENT.
4. BENCH RIPRAP AS NECESSARY TO MATCH PROPOSED GRADE AND PLACE STONE-SOIL MIX TO RESULT IN SECURELY INTERLOCKED ROCK AT THE DESIGN THICKNESS AND GRADE. COMPACT AND LEVEL TO ELIMINATE ALL VOIDS AND ROCKS PROJECTING ABOVE FINISHED GRADE.
6. FOR GRADING AND CONTOUR INFORMATION, SEE DITCH AND CHANNEL GRADING PLAN.

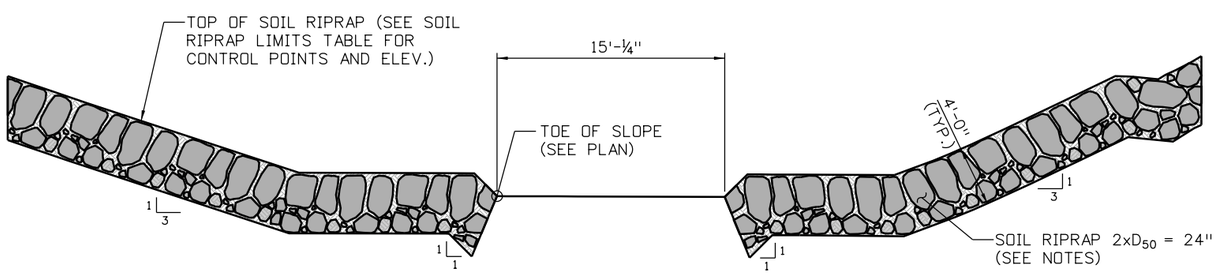

5 0 5 10
HORIZONTAL SCALE: 1"=10'
VERTICAL SCALE: 1"=10'

SECTION A

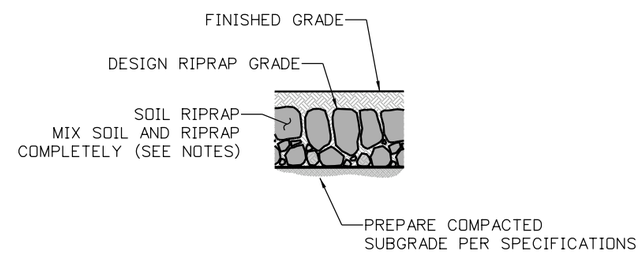

SOIL RIPRAP TYPICAL SECTION

100% SET

CALL UTILITY NOTIFICATION CENTER OF COLORADO
811
CALL 2-BUSINESS DAYS IN ADVANCE BEFORE YOU DIG, GRADE, OR EXCAVATE FOR THE MARKING OF UNDERGROUND MEMBER UTILITIES

REVISIONS:	NO.	DATE	REVISION DESCRIPTION:

Boulder County
Michael Baker INTERNATIONAL

BOULDER COUNTY TRANSPORTATION DEPARTMENT
ENGINEERING DIVISION

DESIGNED:	CAD:	CHECKED:	DATE:
CMM	BMT		11/4/2016

BOW MOUNTAIN BRIDGE
BRIDGE HYDRAULIC INFORMATION (2 OF 2)

PROJECT NO: 4043.SEPT12C34 SHEET NO: 106

mike.doyle 6:00:24 PM pw:\\DCPWAPP1.bkr.mbakercorp.com:pwprod\Documents\Projects\Lakewood_Office\Boulder_County_Emergency_Transportation\T04\08_Sheet_Files\06_Structures\DGN\Bridges\138200_BRDG_09.dgn

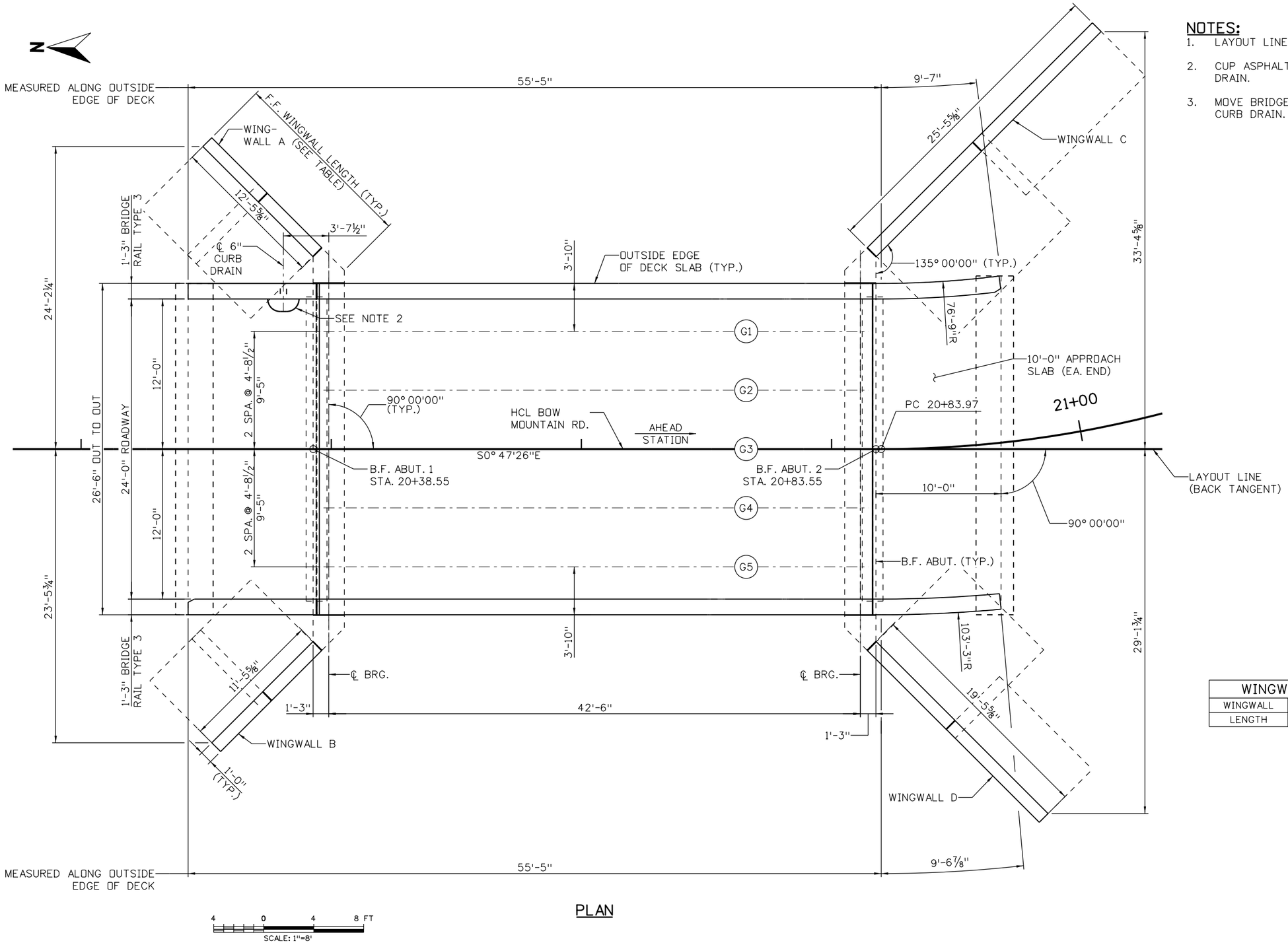

NOTES:

1. LAYOUT LINE IS TANGENT FROM PC 20+83.97.
2. CUP ASPHALT 0" AT 1'-0" RADIUS TO TOP OF DECK AT CURB DRAIN.
3. MOVE BRIDGE RAIL POST AND BEND REINFORCING TO CLEAR CURB DRAIN.

WINGWALL LENGTH ALONG FRONT FACE				
WINGWALL	A	B	C	D
LENGTH	15'-0"	14'-0"	28'-0"	22'-0"

PLAN

4 0 4 8 FT
SCALE: 1"=8'

100% SET

CALL UTILITY NOTIFICATION CENTER OF COLORADO
811
CALL 2-BUSINESS DAYS IN ADVANCE BEFORE YOU DIG, GRADE, OR EXCAVATE FOR THE MARKING OF UNDERGROUND MEMBER UTILITIES

REVISIONS: NO.	DATE	REVISION DESCRIPTION:

Boulder County
Michael Baker INTERNATIONAL

BOULDER COUNTY TRANSPORTATION DEPARTMENT
ENGINEERING DIVISION

DESIGNED:	CAD:	CHECKED:	DATE:
SPO	BMT		11/4/2016

BOW MOUNTAIN BRIDGE
CONSTRUCTION LAYOUT

PROJECT NO: 4043.SEPT12C34 SHEET NO: 107

mike.doyle 6:00:49 PM 11/4/2016 pw:\\DCPWAPP1.bkr.mbakercorp.com:pwprod\Documents\Projects\Lakewood_Office\Boulder_County_Emergency_Transportation\T04\08_Sheet_Files\06_Structures\DGN\Bridges\138200_BRDG_10.dgn

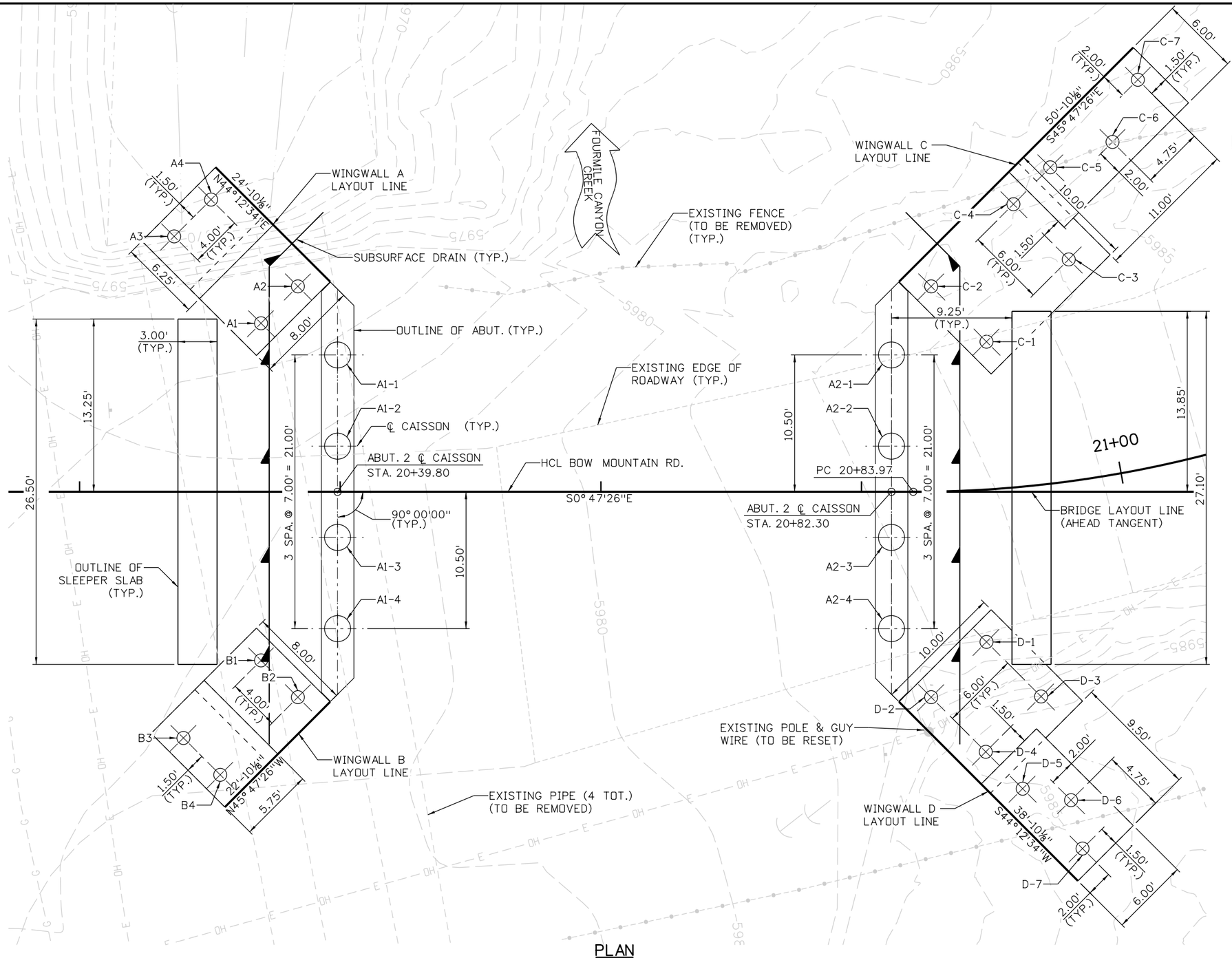

PLAN

NOTES:

1. FOR CAISSON DETAILS, SEE CAISSON DETAILS SHEET.
2. FOR UNDERDRAIN DETAILS, SEE MECHANICALLY STABILIZED BACKFILL SHEET.

Know what's below. Call before you dig.

100% SET

CALL UTILITY NOTIFICATION CENTER OF COLORADO
CALL 2-BUSINESS DAYS IN ADVANCE BEFORE YOU DIG, GRADE, OR EXCAVATE FOR THE MARKING OF UNDERGROUND MEMBER UTILITIES

REVISIONS: NO.	DATE	REVISION DESCRIPTION:

BOULDER COUNTY TRANSPORTATION DEPARTMENT
ENGINEERING DIVISION
Michael Baker INTERNATIONAL

DESIGNED:	CAD:	CHECKED:	DATE:
MCD	BMT		11/4/2016

BOW MOUNTAIN BRIDGE
FOUNDATION LAYOUT

PROJECT NO: 4043.SEPT12C34 | SHEET NO: 108

mike.doyle 6:01:21 PM 11/4/2016 pw:\\DCPWAPP1.bkr.mbakercorp.com:pwprod\Documents\Projects\Lakewood_Office\Boulder_County_Emergency_Transportation\T04\08_Sheet_Files\06_Structures\DGN\Bridges\138200_BRDG_11.dgn

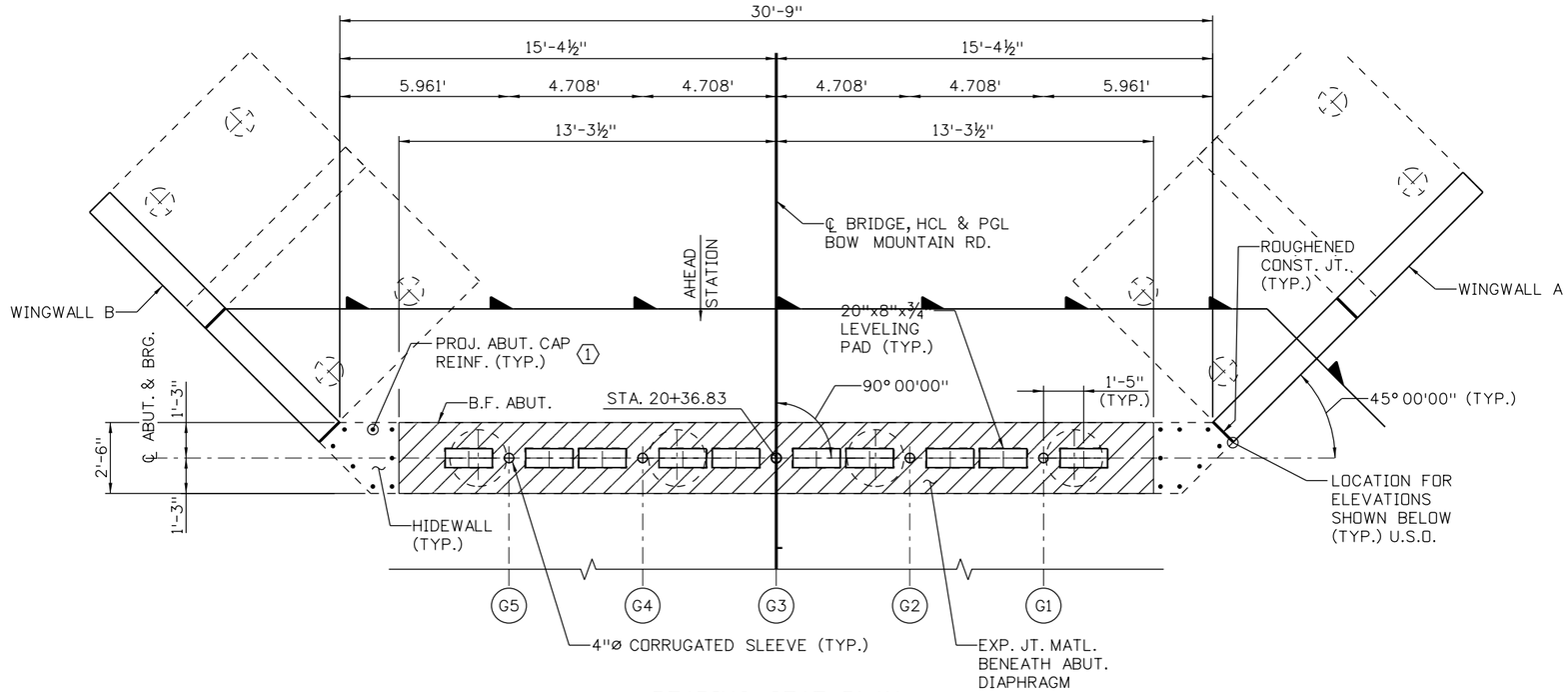

BEARING SEAT PLAN

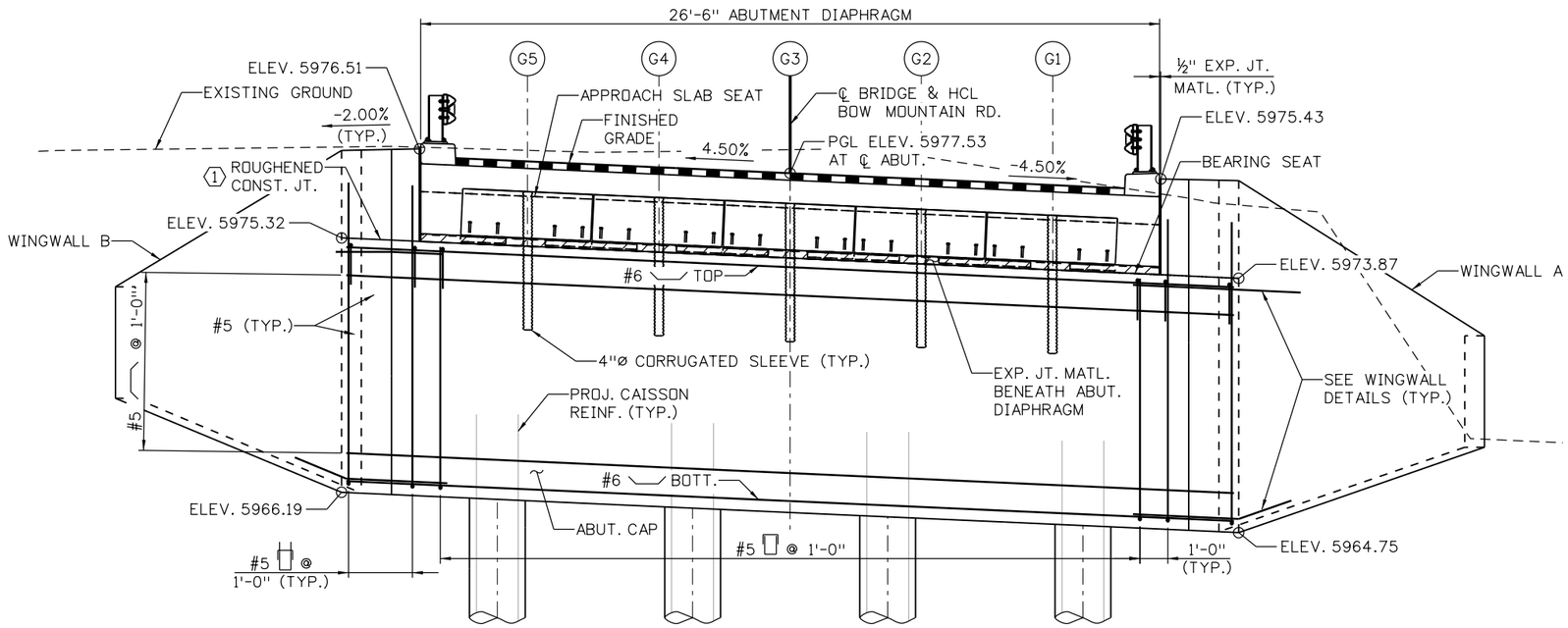

ELEVATION

NOTES:

1. ABUTMENT CONCRETE SHALL BE CONCRETE CLASS D (BRIDGE).
2. FOR ABUTMENT DIAPHRAGM DETAILS, SEE ABUTMENT DETAILS.

KEYNOTES:

1. THE CONTRACTIOR MAY ELECT TO PROVIDE A ROUGHENED CONSTRUCTION JOINT AND PROJECTING REINFORCEMENT OR MAY CAST THE HIDEWALL MONOLITHICALLY WITH THE ABUTMENT CAP.

BEARING SEAT ELEVATIONS TABLE					
GIRDER	G5	G4	G3	G2	G1
ELEVATION	5975.00	5974.79	5974.58	5974.37	5974.16

100% SET

CALL UTILITY NOTIFICATION CENTER OF COLORADO
811
CALL 2-BUSINESS DAYS IN ADVANCE BEFORE YOU DIG, GRADE, OR EXCAVATE FOR THE MARKING OF UNDERGROUND MEMBER UTILITIES

REVISIONS: NO.	DATE	REVISION DESCRIPTION:

Boulder County
Michael Baker INTERNATIONAL

BOULDER COUNTY TRANSPORTATION DEPARTMENT
ENGINEERING DIVISION

DESIGNED:	CAD:	CHECKED:	DATE:
MCD	BMT		11/4/2016

BOW MOUNTAIN BRIDGE
ABUTMENT 1

PROJECT NO: 4043.SEPT12C34 | SHEET NO: 109

mike.doyle 6:01:45 PM pw:\\DCPWAPP1.bkr.mbakercorp.com:pwprod\Documents\Projects\Lakewood_Office\Boulder_County_Emergency_Transportation\T04\08_Sheet_Files\06_Structures\DGN\Bridges\138200_BRDG_12.dgn

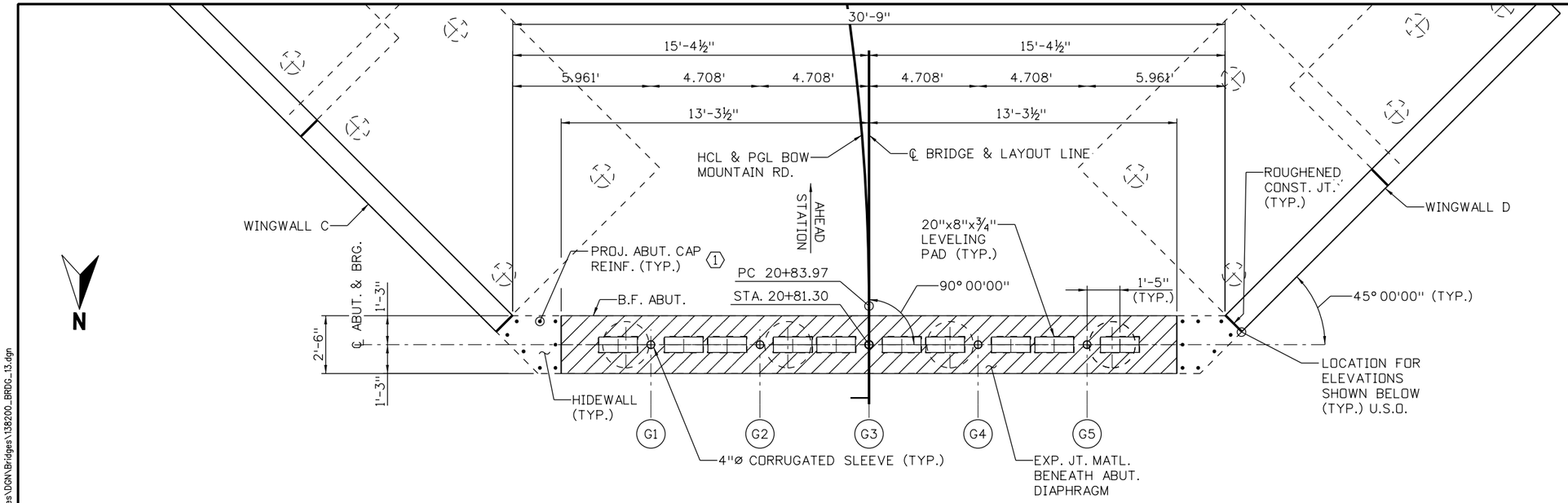

PLAN

NOTES:

1. FOR NOTES AND KEYNOTES, REFER TO ABUTMENT 1 SHEET.

BEARING SEAT ELEVATIONS TABLE					
GIRDER	G1	G2	G3	G4	G5
ELEVATION	5978.85	5979.07	5979.28	5979.49	5979.70

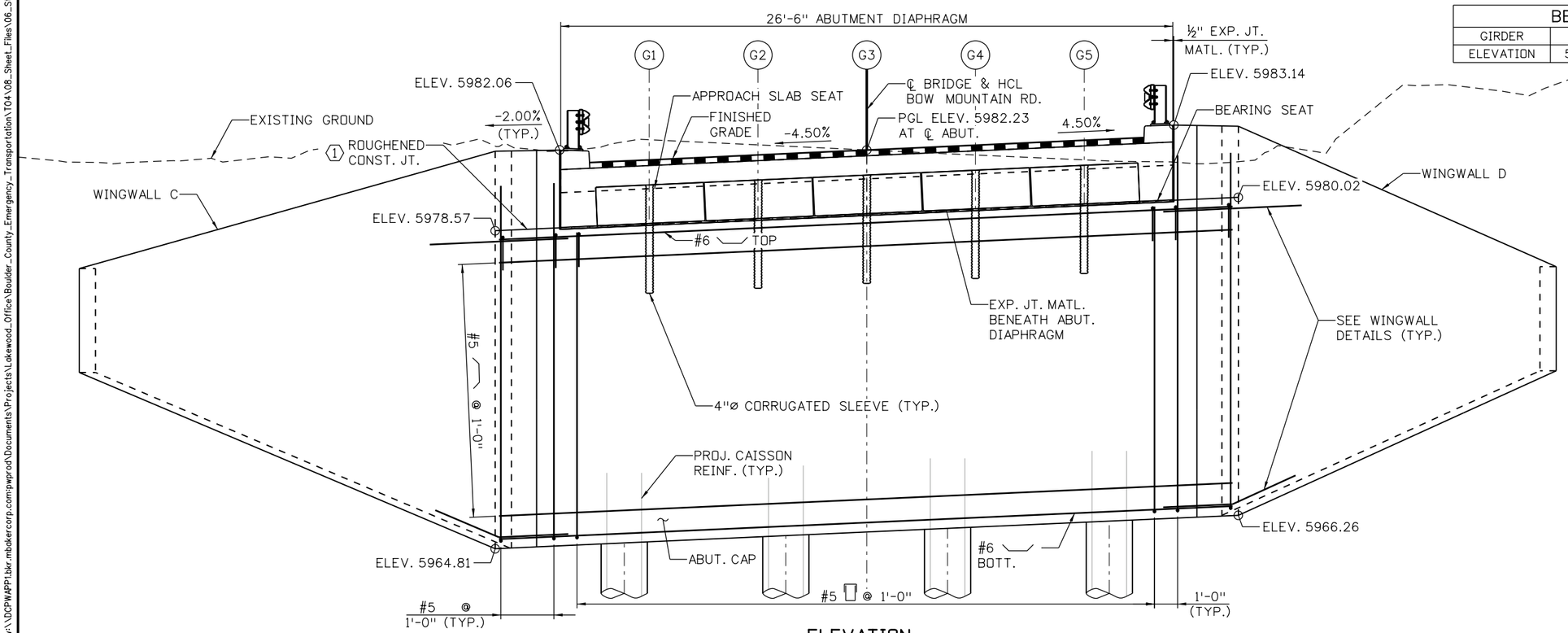

ELEVATION

100% SET

CALL UTILITY NOTIFICATION CENTER OF COLORADO
811
CALL 2-BUSINESS DAYS IN ADVANCE BEFORE YOU DIG, GRADE, OR EXCAVATE FOR THE MARKING OF UNDERGROUND MEMBER UTILITIES

REVISIONS: NO.	DATE	REVISION DESCRIPTION:

Boulder County

Michael Baker INTERNATIONAL

BOULDER COUNTY TRANSPORTATION DEPARTMENT
ENGINEERING DIVISION

DESIGNED:	CAD:	CHECKED:	DATE:
MCD	BMT		11/4/2016

BOW MOUNTAIN BRIDGE
ABUTMENT 2

PROJECT NO: 4043.SEPT12C34 | SHEET NO: 110

mike.doyle 6:02:08 PM pw:\\DCPWAPP1.bkr.mbakercorp.com:pwprod\Documents\Projects\Lakewood_Office\Boulder_County_Emergency_Transportation\T04\08_Sheet_Files\06_Structures\DGN\Bridges\138200_BRDG_13.dgn

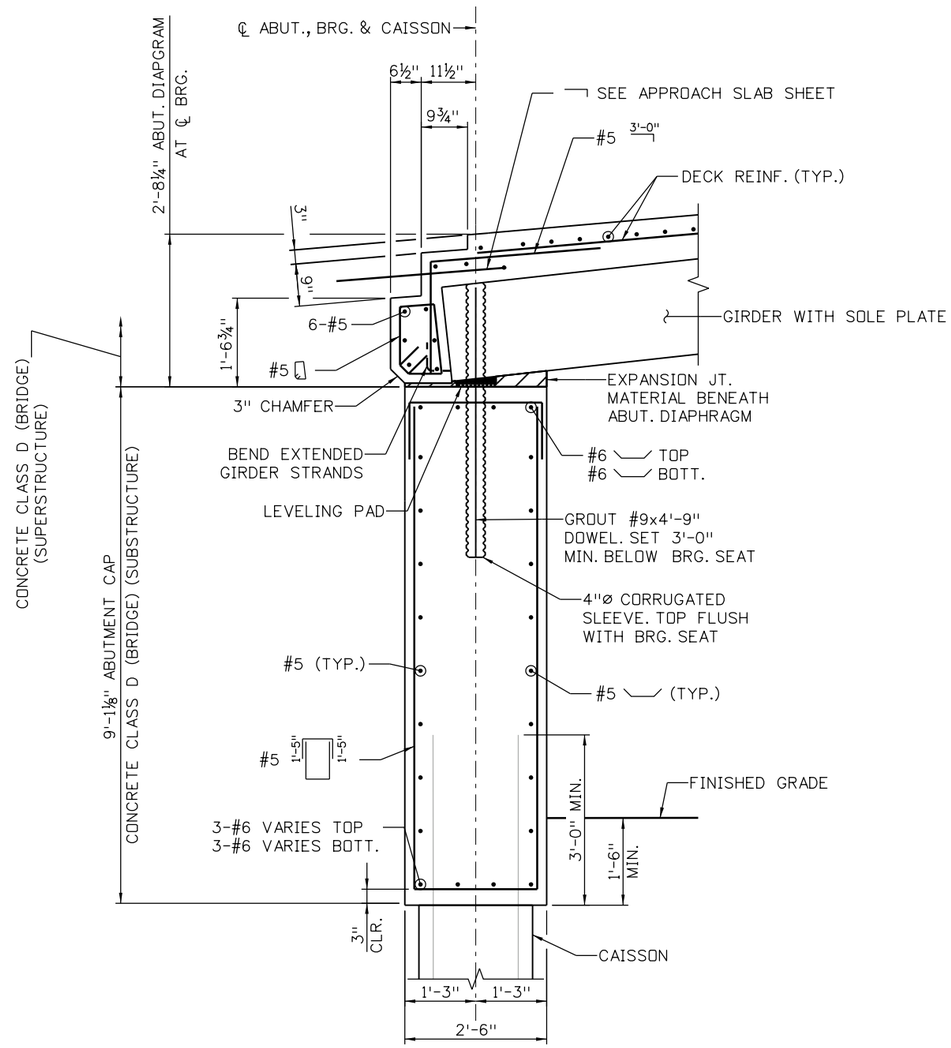

ABUTMENT 1 TYPICAL SECTION

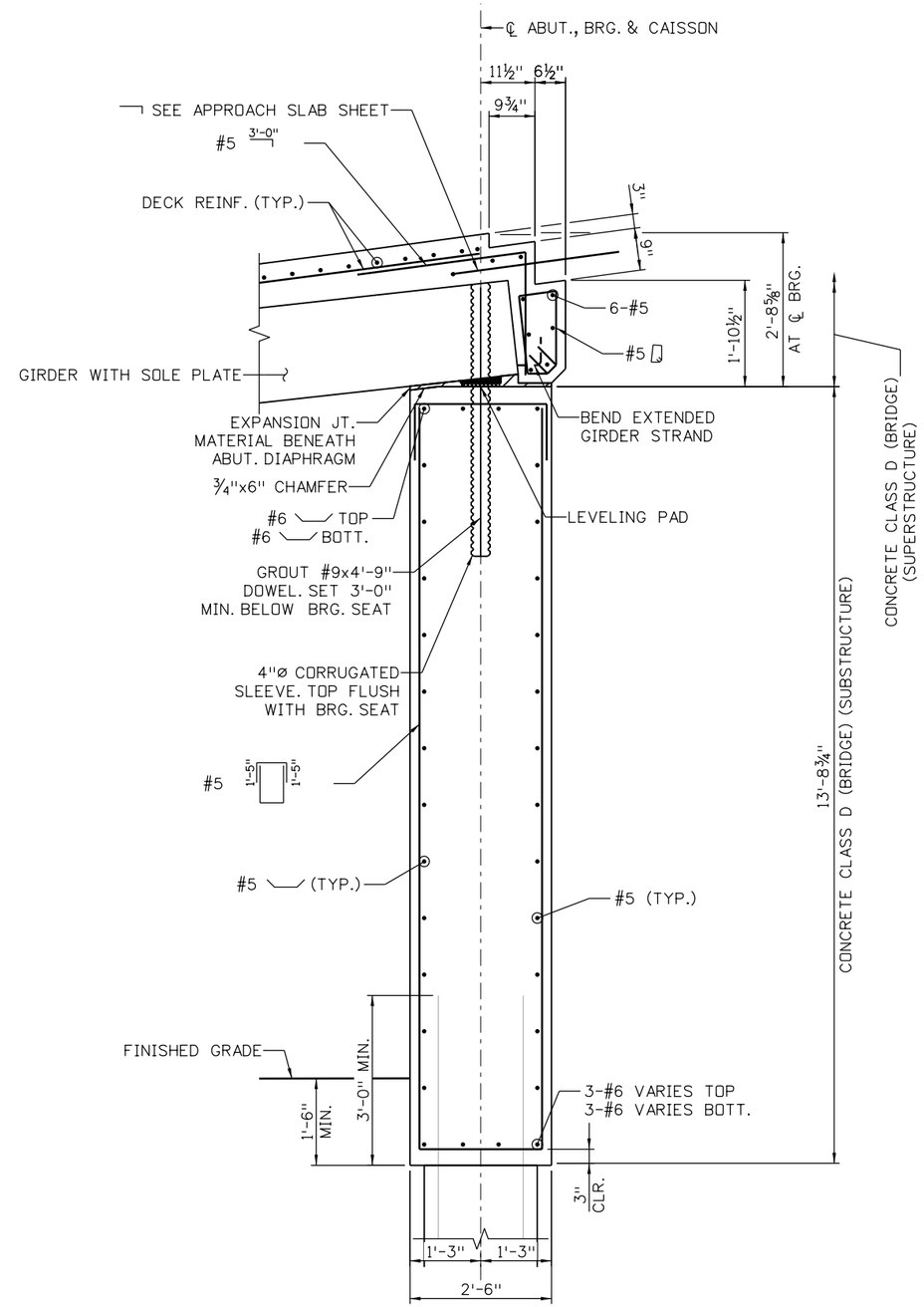

ABUTMENT 2 TYPICAL SECTION

100% SET

CALL UTILITY NOTIFICATION CENTER OF COLORADO
811
CALL 2-BUSINESS DAYS IN ADVANCE BEFORE YOU DIG, GRADE, OR EXCAVATE FOR THE MARKING OF UNDERGROUND MEMBER UTILITIES

REVISIONS:	NO.	DATE	REVISION DESCRIPTION:

Boulder County

Michael Baker INTERNATIONAL

BOULDER COUNTY TRANSPORTATION DEPARTMENT
ENGINEERING DIVISION

DESIGNED:	CAD:	CHECKED:	DATE:
MCD	BMT		11/4/2016

BOW MOUNTAIN BRIDGE
ABUTMENT DETAILS

PROJECT NO: 4043.SEPT12C34 | SHEET NO: 111

mike.doyle 6:02:26 PM pw:\\DCPWAPP1.bkr.mbakercorp.com:pwprod\Documents\Projects\Lakewood_Office\Boulder_County_Emergency_Transportation\T04\08_Sheet_Files\06_Structures\DGN\Bridges\138200_BRDG_14.dgn

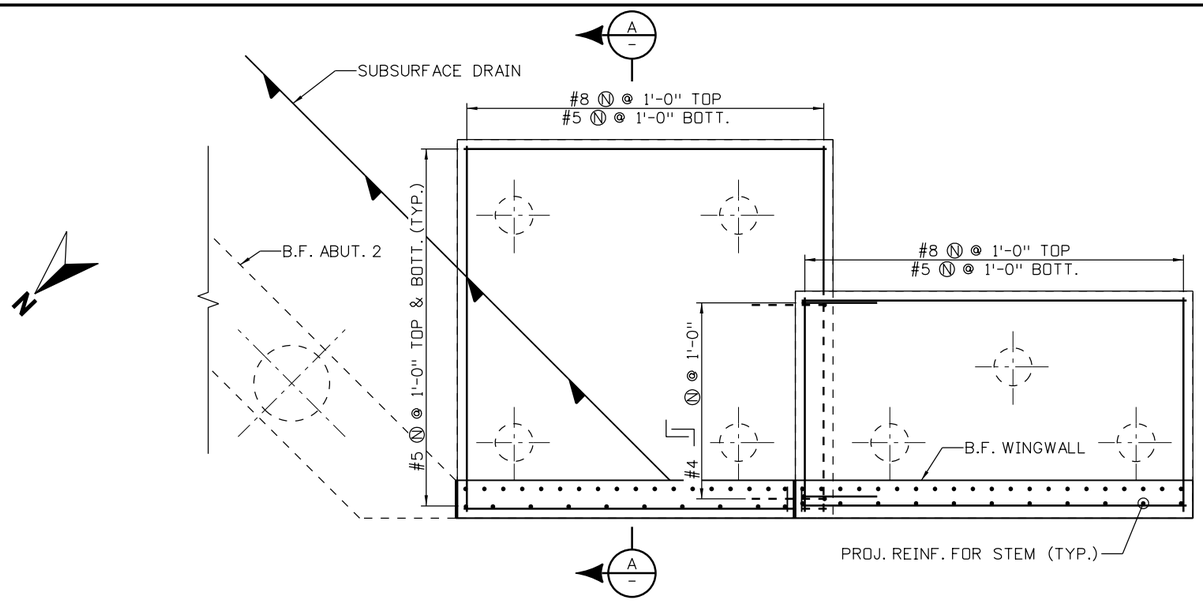

FOOTING PLAN

SUPERSTRUCTURE NOT SHOWN

NOTES:

1. WINGWALL CONCRETE SHALL BE CONCRETE CLASS D (WALL).
2. FOR WINGWALL FOOTING DIMENSIONS, SEE FOUNDATION LAYOUT.
3. FOR CAISSON DETAILS, SEE CAISSON DETAILS.
4. FOR BACKFILL AND DRAINAGE DETAILS, SEE MECHANICALLY STABILIZED BACKFILL.
4. WINGWALL D SHOWN, WINGWALL C SIMILIAR.
5. WATERSTOP AND EXPANSION JOINT MATERIAL SHALL BE INCIDENTAL TO ITEM 601 STRUCTURAL CONCRETE CLASS D (WALL).

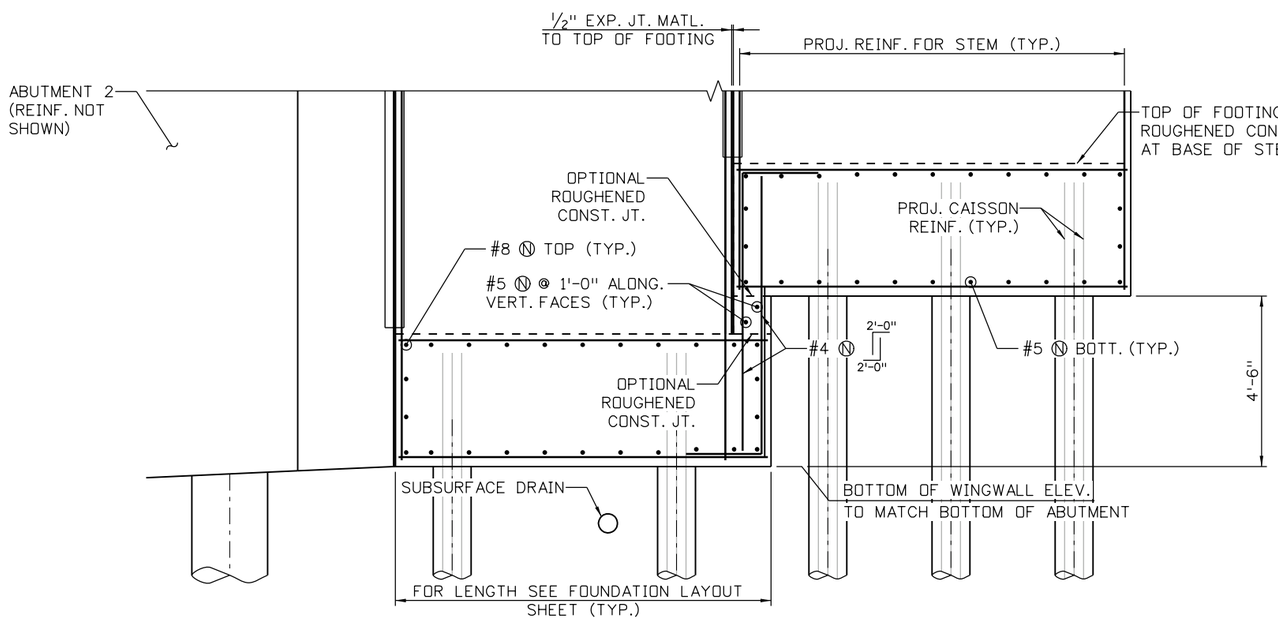

FOOTING ELEVATION

F.F. SHOWN, B.F. SIMILAR.

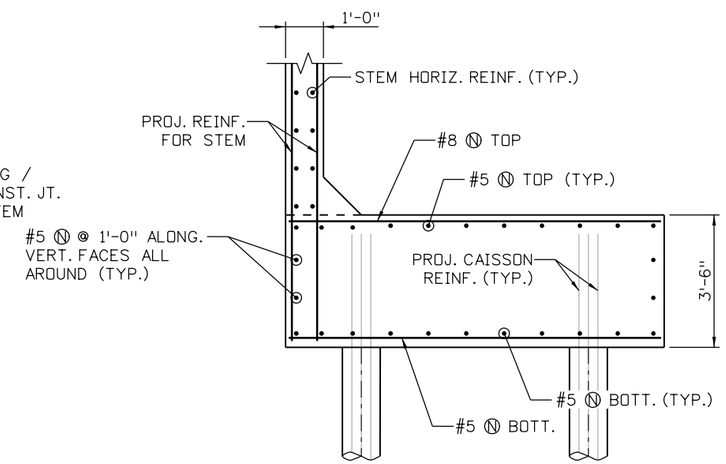

FOOTING TYPICAL SECTION (A)

100% SET

CALL UTILITY NOTIFICATION CENTER OF COLORADO
811
CALL 2-BUSINESS DAYS IN ADVANCE BEFORE YOU DIG, GRADE, OR EXCAVATE FOR THE MARKING OF UNDERGROUND MEMBER UTILITIES

REVISIONS:	NO.	DATE	REVISION DESCRIPTION:

BOULDER COUNTY TRANSPORTATION DEPARTMENT
ENGINEERING DIVISION
Michael Baker INTERNATIONAL

DESIGNED:	CAD:	CHECKED:	DATE:
SPO	BMT		11/4/2016

BOW MOUNTAIN BRIDGE
WINGWALL DETAILS (1 OF 2)

PROJECT NO: 4043.SEPT12C34 | SHEET NO: 112

mike.doyle 6:02:43 PM pw:\\DCPWAPP1.bkr.mbakercorp.com:pwprod\Documents\Projects\Lakewood_Office\Boulder_County_Emergency_Transportation\T04\08_Sheet_Files\06_Structures\DGN\Bridges\138200_BRDG_15.dgn

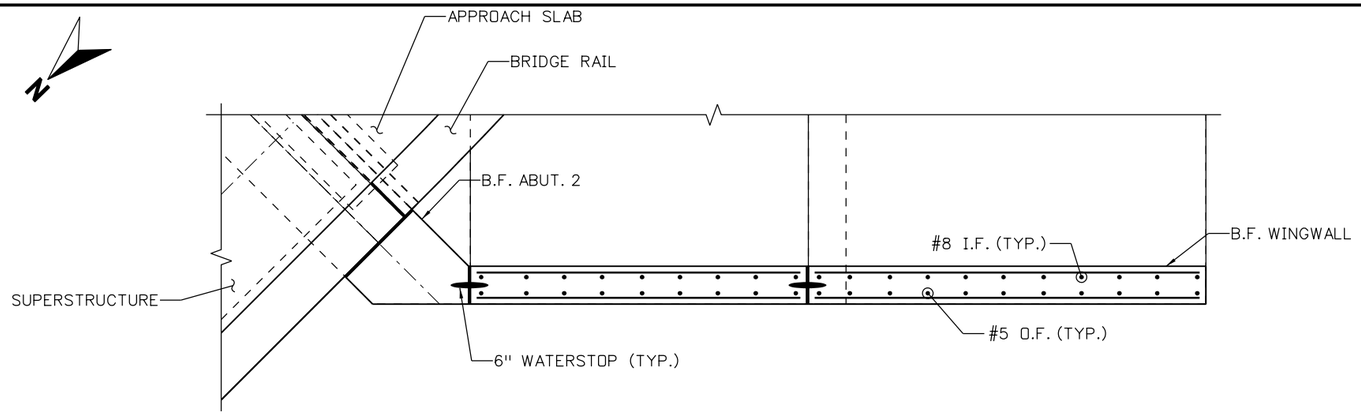

PLAN

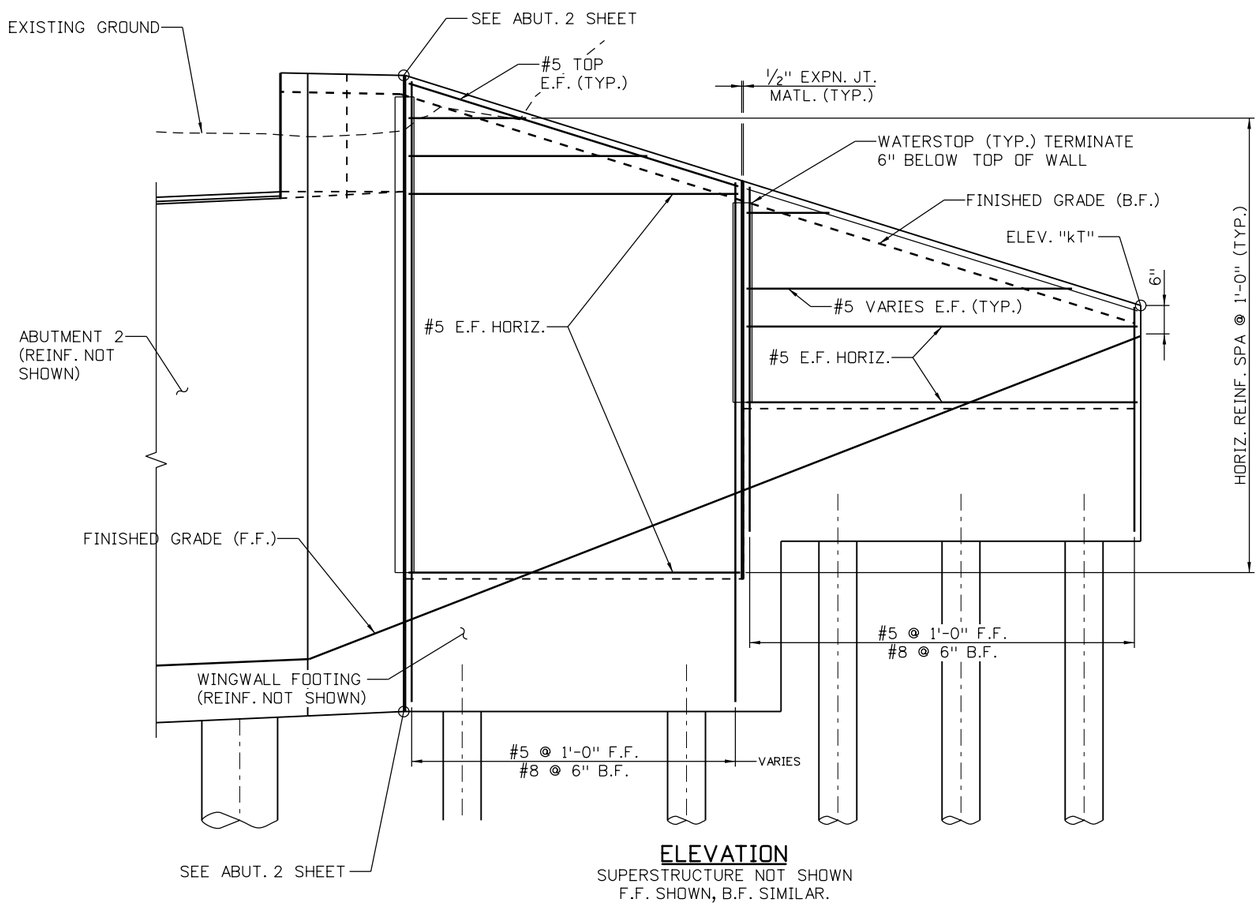

ELEVATION
SUPERSTRUCTURE NOT SHOWN
F.F. SHOWN, B.F. SIMILAR.

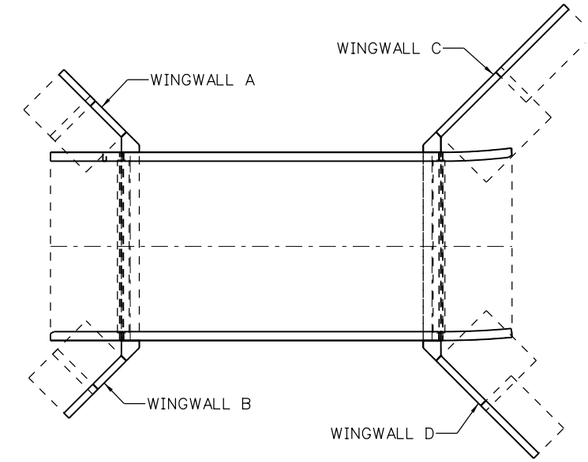

LOCATION PLAN

NOTES:
1. FOR NOTES, SEE WINGALL DETAILS SHEET 1.
2. WINGWALL D SHOWN, WINGWALL C SIMILIAR.

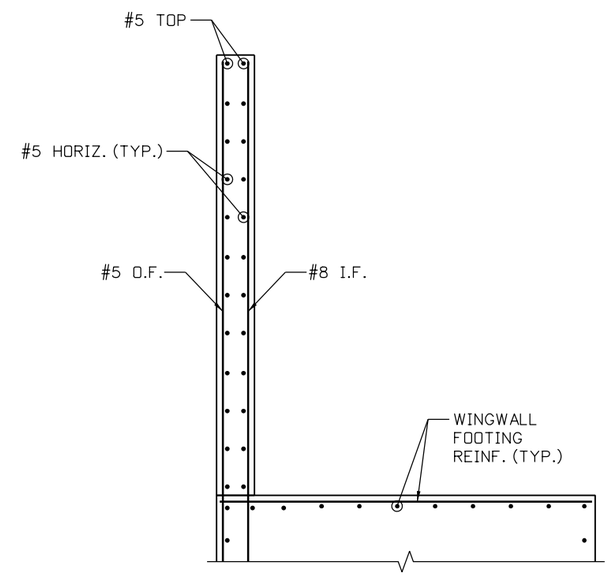

TYPICAL SECTION A

100% SET

CALL UTILITY NOTIFICATION CENTER OF COLORADO
811
CALL 2-BUSINESS DAYS IN ADVANCE BEFORE YOU DIG, GRADE, OR EXCAVATE FOR THE MARKING OF UNDERGROUND MEMBER UTILITIES

REVISIONS: NO.	DATE	REVISION DESCRIPTION:

Boulder County
Michael Baker INTERNATIONAL

BOULDER COUNTY TRANSPORTATION DEPARTMENT
ENGINEERING DIVISION

DESIGNED:	CAD:	CHECKED:	DATE:
SPO	BMT		11/4/2016

BOW MOUNTAIN BRIDGE
WINGWALL DETAILS (2 OF 2)

PROJECT NO: 4043.SEPT12C34 | SHEET NO: 113

mike.doyle 6:03:00 PM pw:\\DCPWAPP1bkr.mbakercorp.com:pwprod\Documents\Projects\Lakewood_Office\Boulder_County_Emergency_Transportation\T04\08_Sheet_Files\06_Structures\DGN\Bridges\138200_BRDG_16.dgn

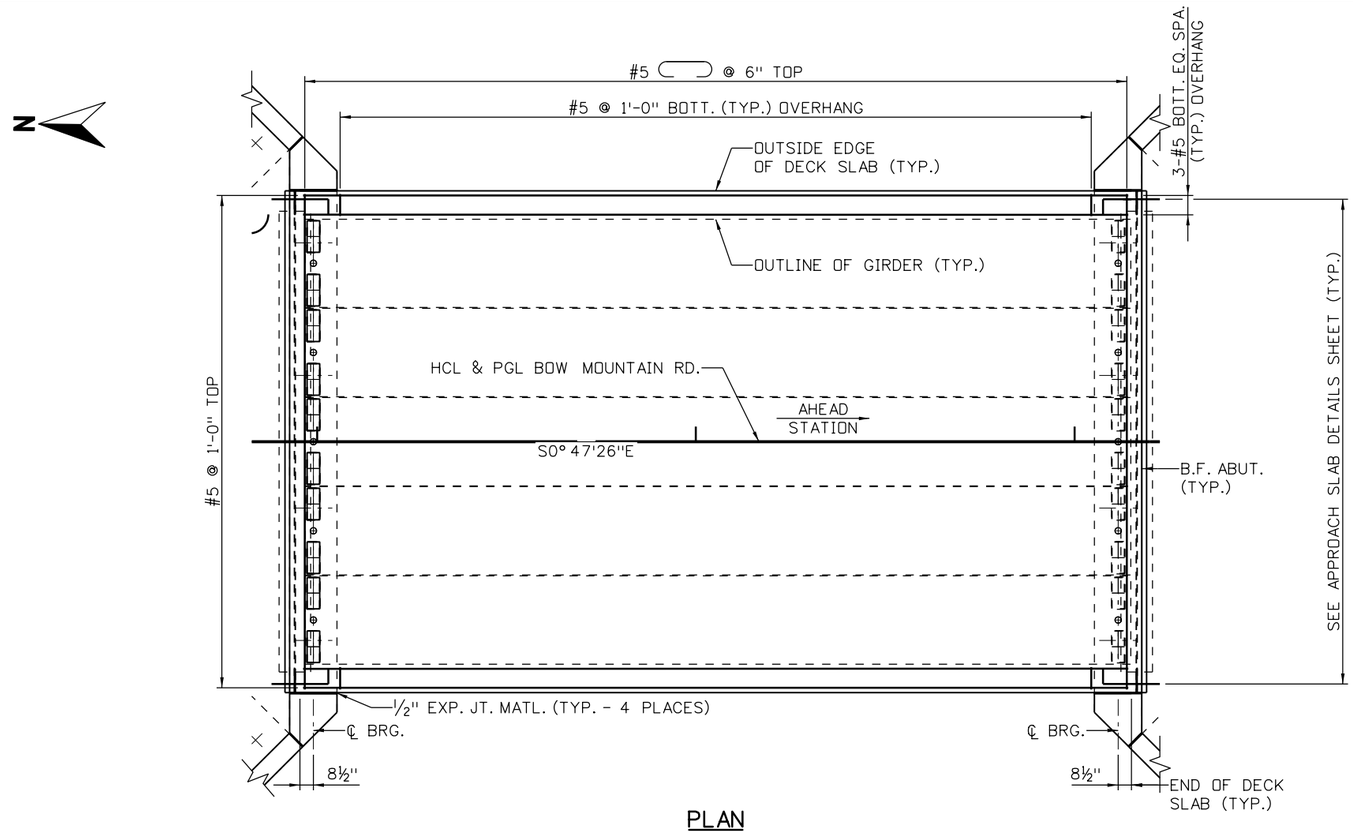

PLAN

SCALE: 1/8" = 1'-0"

NOTES:

1. DECK SLAB SHALL BE CONCRETE CLASS D (BRIDGE).
2. PROJECTING BRIDGE RAIL REINFORCEMENT NOT SHOWN. FOR RAILING DETAILS, SEE BRIDGE RAIL TYPE 3.
3. THE CONTRACTOR MAY ELECT TO SPLICE TOP REINFORCEMENT. ALTERNATE ALL LAP SPLICES.
4. HAUNCH VARIES TO 1" MINIMUM AT ℄ SPAN.

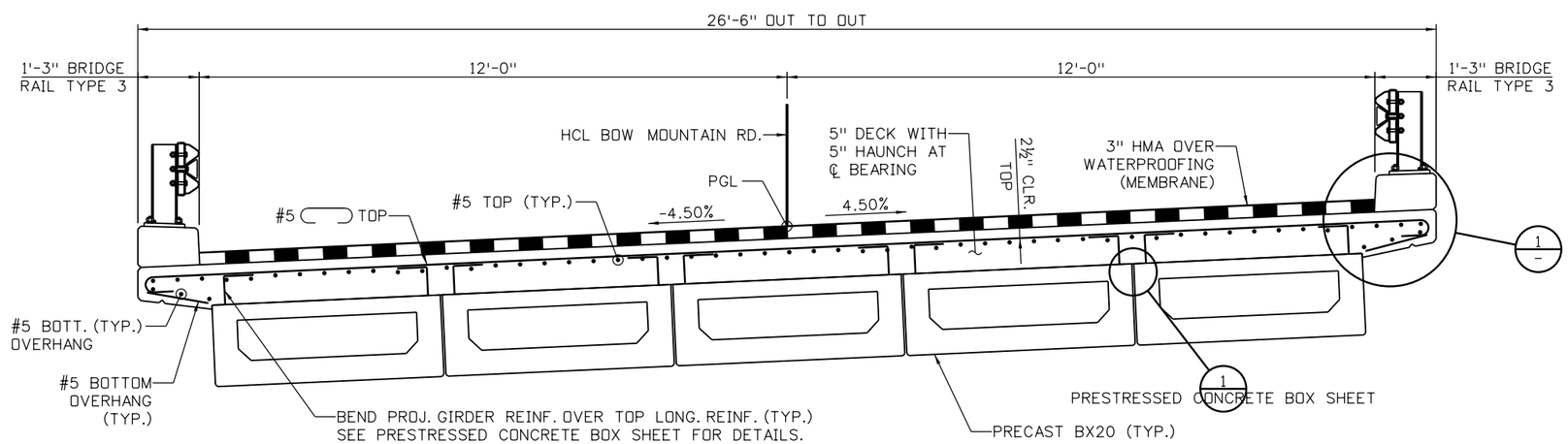

TYPICAL SECTION

LOOKING AHEAD STATION
N.T.S.

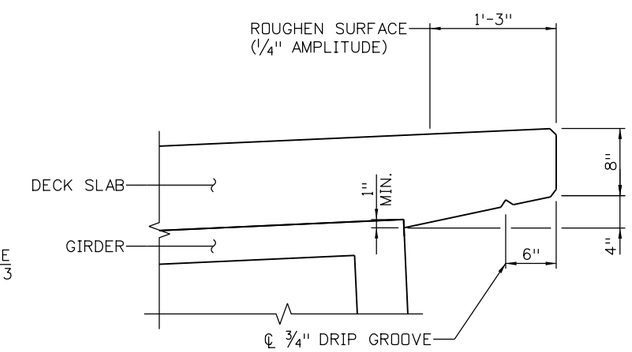

DETAIL 1/-

RIGHT OVERHANG SHOWN, LEFT OVERHANG SIMILAR
N.T.S.

4 0 4 8 FT
SCALE: 1"=8'

100% SET

CALL UTILITY NOTIFICATION CENTER OF COLORADO
811
CALL 2-BUSINESS DAYS IN ADVANCE BEFORE YOU DIG, GRADE, OR EXCAVATE FOR THE MARKING OF UNDERGROUND MEMBER UTILITIES

REVISIONS:	NO.	DATE	REVISION DESCRIPTION:

Boulder County

BOULDER COUNTY TRANSPORTATION DEPARTMENT
ENGINEERING DIVISION

Michael Baker INTERNATIONAL

DESIGNED:	CAD:	CHECKED:	DATE:
SPO	BMT		11/4/2016

BOW MOUNTAIN BRIDGE
DECK SLAB DETAILS

PROJECT NO: 4043.SEPT12C34 | SHEET NO: 114

mike.doyle 6:03:17 PM pw:\\DCPWAPP1.bkr.mbakercorp.com:pwprod\Documents\Projects\Lakewood_Office\Boulder_County_Emergency_Transportation\T04\08_Sheet_Files\06_Structures\DGN\Bridges\138200_BRDG_17.dgn

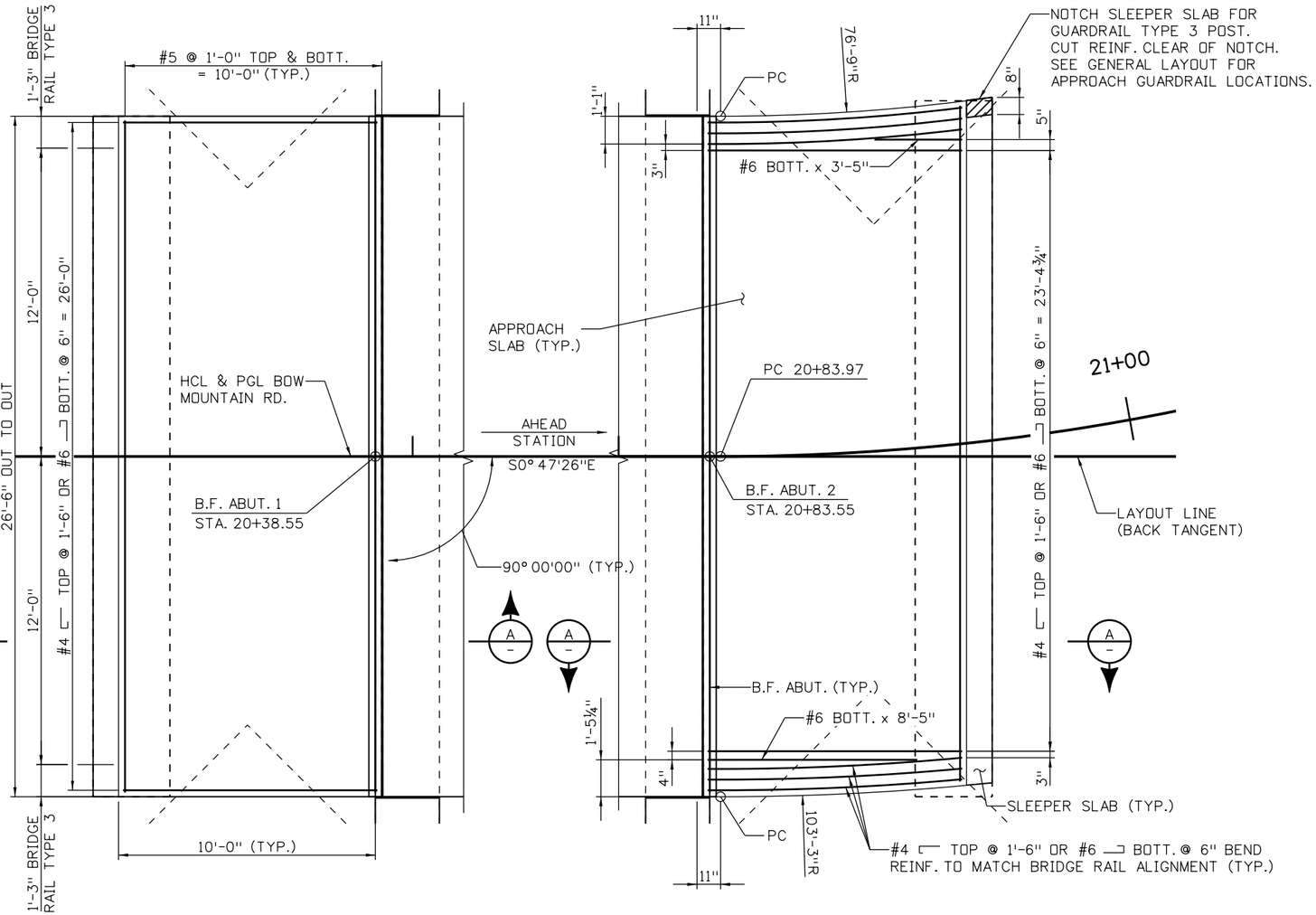

PLAN

SCALE: 3/16" = 1'-0"
PROJ. DECK SLAB REINF. NOT SHOWN

NOTES:

1. APPROACH SLAB AND SLEEPER SLAB CONCRETE SHALL BE CONCRETE CLASS D (BRIDGE).
2. BRIDGE RAIL NOT SHOWN. FOR BRIDGE RAIL REINFORCING DETAILS SEE BRIDGE RAIL TYPE 3 SHEET.
3. SHEET METAL AND EXPANSION JOINT MATERIAL SHALL BE INCLUDED WITH ITEM 601 CONCRETE CLASS D (BRIDGE).

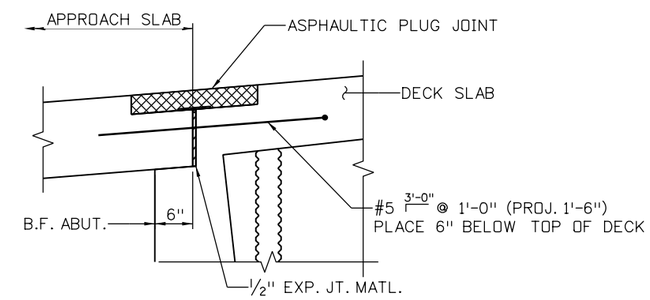

DETAIL 1

SCALE: ½" = 1'-0"
HMA NOT SHOWN

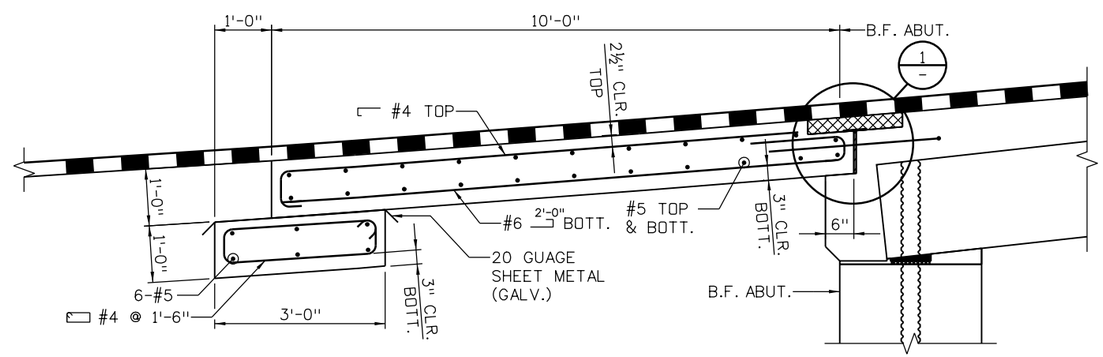

TYPICAL SECTION A

SCALE: 3/8" = 1'-0"

100% SET

CALL UTILITY NOTIFICATION CENTER OF COLORADO
811
CALL 2-BUSINESS DAYS IN ADVANCE BEFORE YOU DIG, GRADE, OR EXCAVATE FOR THE MARKING OF UNDERGROUND MEMBER UTILITIES

REVISIONS:	NO.	DATE	REVISION DESCRIPTION:

Boulder County
Michael Baker INTERNATIONAL

BOULDER COUNTY TRANSPORTATION DEPARTMENT
ENGINEERING DIVISION

DESIGNED:	CAD:	CHECKED:	DATE:
SPO	BMT		11/4/2016

BOW MOUNTAIN BRIDGE
APPROACH SLAB DETAILS

PROJECT NO: 4043.SEPT12C34 | SHEET NO: 115

mike.doyle 6:03:36 PM 11/4/2016 pw:\\DCPWAPP1.bkr.mbakercorp.com:pwprod\Documents\Projects\Lakewood_Office\Boulder_County_Emergency_Transportation\T04\08_Sheet_Files\06_Structures\DGN\Bridges\138200_BRDG_18.dgn

HORIZONTAL CONTROL LINE

BENT LINE DESCRIPTION	STATION	OFFSET	FINISHED GRADE ELEVATION	FROM LAYOUT LINE OFFSET, X	FROM LAYOUT LINE ORDINATE, Y	PROJECT COORDINATES NORTHING	PROJECT COORDINATES EASTING
BEGIN AS1	2028.5501	0.0000	5976.6677	0.0000		265520.1720	52270.6158
BF A1	2038.5501	0.0000	5977.4292	0.0000		265510.1730	52270.7537
CL BRG A1	2039.8001	0.0000	5977.5332	0.0000		265508.9231	52270.7710
CL BRG A2	2082.3001	0.0000	5982.2295	0.0000		265466.4271	52271.3573
BF A2	2083.5501	0.0000	5982.3974	0.0000		265465.1772	52271.3746
END AS2	2093.5683	0.0000	5983.7429	-0.5114		265455.1853	52272.0239

LAYOUT LINE

BENT LINE DESCRIPTION	STATION	OFFSET	FINISHED GRADE ELEVATION	FROM LAYOUT LINE OFFSET, X	FROM LAYOUT LINE ORDINATE, Y	PROJECT COORDINATES NORTHING	PROJECT COORDINATES EASTING
BEGIN AS1	2028.5501	0.0000	5976.6677	0.0000		265520.1720	52270.6158
BF A1	2038.5501	0.0000	5977.4292	0.0000		265510.1730	52270.7537
CL BRG A1	2039.8001	0.0000	5977.5332	0.0000		265508.9231	52270.7710
CL BRG A2	2082.3001	0.0000	5982.2295	0.0000		265466.4271	52271.3573
BF A2	2083.5501	0.0000	5982.3974	0.0000		265465.1772	52271.3746
END AS2	2093.5142	0.5085	5983.7585	0.0000		265455.1782	52271.5125

CL GIRDER 1

BENT LINE DESCRIPTION	STATION	OFFSET	TOP OF DECK ELEVATION	TOP OF DECK ELEV + DL	FROM LAYOUT LINE OFFSET, X	FROM LAYOUT LINE ORDINATE, Y	PROJECT COORDINATES NORTHING	PROJECT COORDINATES EASTING
CL BRG A1	2039.8001	-9.4167	5976.8594	5976.8594	0.0000		265509.0530	52280.1868
F-1	2044.0501	-9.4167	5977.2276	5977.2376	0.0000		265504.8034	52280.2454
F-2	2048.3001	-9.4167	5977.6185	5977.6374	0.0000		265500.5538	52280.3040
F-3	2052.5501	-9.4167	5978.0319	5978.0578	0.0000		265496.3042	52280.3627
F-4	2056.8001	-9.4167	5978.4679	5978.4982	0.0000		265492.0546	52280.4213
F-5	2061.0501	-9.4167	5978.9266	5978.9584	0.0000		265487.8050	52280.4799
F-6	2065.3001	-9.4167	5979.4079	5979.4382	0.0000		265483.5554	52280.5386
F-7	2069.5501	-9.4167	5979.9117	5979.9376	0.0000		265479.3058	52280.5972
F-8	2073.8001	-9.4167	5980.4382	5980.4571	0.0000		265475.0562	52280.6558
F-9	2078.0501	-9.4167	5980.9873	5980.9973	0.0000		265470.8066	52280.7145
CL BRG A2	2082.3001	-9.4167	5981.5558	5981.5558	0.0000		265466.5570	52280.7731

CL GIRDER 2

BENT LINE DESCRIPTION	STATION	OFFSET	TOP OF DECK ELEVATION	TOP OF DECK ELEV + DL	FROM LAYOUT LINE OFFSET, X	FROM LAYOUT LINE ORDINATE, Y	PROJECT COORDINATES NORTHING	PROJECT COORDINATES EASTING
CL BRG A1	2039.8001	-4.7083	5977.0713	5977.0713	0.0000		265508.9880	52275.4788
F-1	2044.0501	-4.7083	5977.4395	5977.4476	0.0000		265504.7384	52275.5375
F-2	2048.3001	-4.7083	5977.8303	5977.8456	0.0000		265500.4889	52275.5961
F-3	2052.5501	-4.7083	5978.2438	5978.2646	0.0000		265496.2393	52275.6547
F-4	2056.8001	-4.7083	5978.6798	5978.7042	0.0000		265491.9897	52275.7134
F-5	2061.0501	-4.7083	5979.1385	5979.1641	0.0000		265487.7401	52275.7720
F-6	2065.3001	-4.7083	5979.6197	5979.6442	0.0000		265483.4905	52275.8306
F-7	2069.5501	-4.7083	5980.1236	5980.1445	0.0000		265479.2409	52275.8893
F-8	2073.8001	-4.7083	5980.6501	5980.6654	0.0000		265474.9913	52275.9479
F-9	2078.0501	-4.7083	5981.1992	5981.2073	0.0000		265470.7417	52276.0065
CL BRG A2	2082.3001	-4.7083	5981.7676	5981.7676	0.0000		265466.4921	52276.0652

CL GIRDER 3

BENT LINE DESCRIPTION	STATION	OFFSET	TOP OF DECK ELEVATION	TOP OF DECK ELEV + DL	FROM LAYOUT LINE OFFSET, X	FROM LAYOUT LINE ORDINATE, Y	PROJECT COORDINATES NORTHING	PROJECT COORDINATES EASTING	ROADWAY CRS-SLP
CL BRG A1	2039.8001	0.0000	5977.2832	5977.2832	0.0000		265508.9231	52270.7710	0.0000
F-1	2044.0501	0.0000	5977.6514	5977.6594	0.0000		265504.6735	52270.8296	0.0000
F-2	2048.3001	0.0000	5978.0422	5978.0574	0.0000		265500.4239	52270.8882	0.0000
F-3	2052.5501	0.0000	5978.4556	5978.4765	0.0000		265496.1743	52270.9469	0.0000
F-4	2056.8001	0.0000	5978.8917	5978.9161	0.0000		265491.9247	52271.0055	0.0000
F-5	2061.0501	0.0000	5979.3503	5979.3760	0.0000		265487.6751	52271.0641	0.0000
F-6	2065.3001	0.0000	5979.8316	5979.8560	0.0000		265483.4255	52271.1228	0.0000
F-7	2069.5501	0.0000	5980.3355	5980.3564	0.0000		265479.1759	52271.1814	0.0000
F-8	2073.8001	0.0000	5980.8620	5980.8772	0.0000		265474.9263	52271.2400	0.0000
F-9	2078.0501	0.0000	5981.4111	5981.4192	0.0000		265470.6767	52271.2987	0.0000
CL BRG A2	2082.3001	0.0000	5981.9795	5981.9795	0.0000		265466.4271	52271.3573	0.0000

CL GIRDER 4

BENT LINE DESCRIPTION	STATION	OFFSET	TOP OF DECK ELEVATION	TOP OF DECK ELEV + DL	FROM LAYOUT LINE OFFSET, X	FROM LAYOUT LINE ORDINATE, Y	PROJECT COORDINATES NORTHING	PROJECT COORDINATES EASTING	ROADWAY CRS-SLP
CL BRG A1	2039.8001	4.7083	5977.4951	5977.4951	0.0000		265508.8581	52266.0631	0.0450
F-1	2044.0501	4.7083	5977.8633	5977.8713	0.0000		265504.6085	52266.1218	0.0450
F-2	2048.3001	4.7083	5978.2541	5978.2693	0.0000		265500.3589	52266.1804	0.0450
F-3	2052.5501	4.7083	5978.6675	5978.6884	0.0000		265496.1093	52266.2390	0.0450
F-4	2056.8001	4.7083	5979.1035	5979.1280	0.0000		265491.8597	52266.2977	0.0450
F-5	2061.0501	4.7083	5979.5622	5979.5879	0.0000		265487.6101	52266.3563	0.0450
F-6	2065.3001	4.7083	5980.0435	5980.0679	0.0000		265483.3606	52266.4149	0.0450
F-7	2069.5501	4.7083	5980.5474	5980.5682	0.0000		265479.1110	52266.4736	0.0450
F-8	2073.8001	4.7083	5981.0739	5981.0891	0.0000		265474.8614	52266.5322	0.0450
F-9	2078.0501	4.7083	5981.6230	5981.6310	0.0000		265470.6118	52266.5908	0.0450
CL BRG A2	2082.3001	4.7083	5982.1914	5982.1914	0.0000		265466.3622	52266.6495	0.0450

CL GIRDER 5

BENT LINE DESCRIPTION	STATION	OFFSET	TOP OF DECK ELEVATION	TOP OF DECK ELEV + DL	FROM LAYOUT LINE OFFSET, X	FROM LAYOUT LINE ORDINATE, Y	PROJECT COORDINATES NORTHING	PROJECT COORDINATES EASTING	ROADWAY CRS-SLP
CL BRG A1	2039.8001	9.4167	5977.7069	5977.7069	0.0000		265508.7932	52261.3552	0.0450
F-1	2044.0501	9.4167	5978.0751	5978.0851	0.0000		265504.5436	52261.4138	0.0450
F-2	2048.3001	9.4167	5978.4660	5978.4849	0.0000		265500.2940	52261.4724	0.0450
F-3	2052.5501	9.4167	5978.8794	5978.9053	0.0000		265496.0444	52261.5311	0.0450
F-4	2056.8001	9.4167	5979.3154	5979.3457	0.0000		265491.7948	52261.5897	0.0450
F-5	2061.0501	9.4167	5979.7741	5979.8059	0.0000		265487.5452	52261.6483	0.0450
F-6	2065.3001	9.4167	5980.2554	5980.2857	0.0000		265483.2956	52261.7070	0.0450
F-7	2069.5501	9.4167	5980.7592	5980.7851	0.0000		265479.0460	52261.7656	0.0450
F-8	2073.8001	9.4167	5981.2857	5981.3046	0.0000		265474.7964	52261.8242	0.0450
F-9	2078.0501	9.4167	5981.8348	5981.8448	0.0000		265470.5468	52261.8829	0.0450
CL BRG A2	2082.3001	9.4167	5982.4033	5982.4033	0.0000		265466.2972	52261.9415	0.0450

LEGEND:

NOTES:

1. POSITIVE ROADWAY CROSS-SLOPE IS UPWARDS FROM PROFILE GRADE.
2. STATIONS, COORDINATES, OFFSETS, AND LENGTHS DEFINE THE STRUCTURE IN A TWO DIMENSIONAL HORIZONTAL PLANE. ELEVATIONS DEFINE THE FINAL GRADE OF THE FINISHED CONCRETE DECK UNLESS NOTED OTHERWISE. FABRICATION OF STRUCTURAL COMPONENTS THROUGH THE DIRECT USE OF THIS INFORMATION IS NOT INTENDED OR ADVISABLE.
3. TOP OF DECK ELEVATIONS ARE 3 INCHES BELOW FINISHED GRADE.
4. FOR DECK LOAD DEFLECTION DATA, SEE PRECAST CONCRETE BOX SHEET(S).
5. FOR ALIGNMENT AND CROSS-SLOPE DATA, SEE GENERAL LAYOUT SHEET(S).

LEFT EDGE OF SLAB

BENT LINE DESCRIPTION	STATION	OFFSET	TOP OF DECK ELEVATION	TOP OF DECK ELEV + DL	FROM LAYOUT LINE OFFSET, X	FROM LAYOUT LINE ORDINATE, Y	PROJECT COORDINATES NORTHING	PROJECT COORDINATES EASTING	ROADWAY CRS-SLP
BF AS1	2028.5501	-13.2500	5975.7379		0.0000		265520.3548	52283.8645	-0.0513
F-1	2031.0501	-13.2500	5975.9375		0.0000		265517.8551	52283.8990	-0.0497
F-2	2033.5501	-13.2500	5976.1450		0.0000		265515.3553	52283.9335	-0.0481
F-3	2036.0501	-13.2500	5976.3603		0.0000		265512.8555	52283.9680	-0.0466
BF A1	2038.5501	-13.2500	5976.5829		0.0000		265510.3558	52284.0025	-0.0450
CL BRG A1	2039.8001	-13.2500	5976.6869	5976.6869	0.0000		265509.1059	52284.0197	-0.0450
F-1	2044.0501	-13.2500	5977.0551	5977.0651	0.0000		265504.8563	52284.0783	-0.0450
F-2	2048.3001	-13.2500	5977.4460	5977.4649	0.0000		265500.6067	52284.1370	-0.0450
F-3	2052.5501	-13.2500	5977.8594	5977.8853	0.0000		265496.3571	52284.1956	-0.0450
F-4	2056.8001	-13.2500	5978.2954	5978.3257	0.0000		265492.1075	52284.2542	-0.0450
F-5	2061.0501	-13.2500	5978.7541	5978.7859	0.0000		265487.8579	52284.3129	-0.0450
F-6	2065.3001	-13.2500	5979.2354	5979.2657	0.0000		265483.6083	52284.3715	-0.0450
F-7	2069.5501	-13.2500	5979.7392	5979.7651	0.0000		265479.3587	52284.4301	-0.0450
F-8	2073.8001	-13.2500	5980.2657	5980.2846	0.0000		265475.1091	52284.4888	-0.0450
F-9	2078.0501	-13.2500	5980.8148	5980.8248	0.0000		265470.8595	52284.5474	-0.0450
CL BRG A2	2082.3001	-13.2500	5981.3833	5981.3833	0.0000		265466.6099	52284.6060	-0.0450
BF A2	2083.5501	-13.2500	5981.5511		0.0000		265465.3600	52284.6233	-0.0450
F-1	2086.4166	-13.2500	5981.9361		0.0000		265462.8547	52284.6863	-0.0450
F-2	2089.3556	-13.2500	5982.3309		0.0000		265460.3526	52284.8298	-0.0450
F-3	2092.2945	-13.2500	5982.7256		0.0000		265457.8566	52285.0550	-0.0450
BF AS2	2095.2334	-13.2500	5983.1203		0.0000		265455.3693	52285.3615	-0.0450

LEFT CURB FLOWLINE

BENT LINE DESCRIPTION	STATION	OFFSET	TOP OF DECK ELEVATION	TOP OF DECK ELEV + DL	FROM LAYOUT LINE OFFSET, X	FROM LAYOUT LINE ORDINATE, Y	PROJECT COORDINATES NORTHING	PROJECT COORDINATES EASTING	ROADWAY CRS-SLP
BF AS1	2028.5501	-12.0000	5975.8020		0.0000		265520.3376	52282.6146	-0.0513
F-1	2031.0501	-12.0000	5975.9997		0.0000		265517.8378	52282.6491	-0.0497
F-2	2033.5501	-12.0000	5976.2051		0.0000		265515.3380	52282.6836	-0.0481
F-3	2036.0501	-12.0000	5976.4184		0.0000		265512.8383	52282.7181	-0.0466
BF A1	2038.5501	-12.0000	5976.6392		0.0000		265510.3385	52282.7526	-0.0450
CL BRG A1	2039.8001	-12.0000	5976.7432	5976.7432	0.0000		265509.0886	52282.7698	-0.0450
F-1	2044.0501	-12.0000	5977.1114	5977.1214	0.0000		265504.8390	52282.8285	-0.0450
F-2	2048.3001	-12.0000	5977.5022	5977.5211	0.0000		265500.5894	52282.8871	-0.0450
F-3	2052.5501	-12.0000	5977.9156	5977.9415	0.0000		265496.3399	52282.9457	-0.0450
F-4	2056.8001	-12.0000	5978.3517	5978.3820	0.0000		265492.0903	52283.0044	-0.0450
F-5	2061.0501	-12.0000	5978.8103	5978.8422	0.0000		265487.8407	52283.0630	-0.0450
F-6	2065.3001	-12.0000	5979.2916	5979.3219	0.0000		265483.5911	52283.1216	-0.0450
F-7	2069.5501	-12.0000	5979.7955	5979.8214	0.0000		265479.3415	52283.1803	-0.0450
F-8	2073.8001	-12.0000	5980.3220	5980.3409	0.0000		265475.0919	52283.2389	-0.0450
F-9	2078.0501	-12.0000	5980.8711	5980.8811	0.0000		265470.8423	52283.2975	-0.0450
CL BRG A2	2082.3001	-12.0000	5981.4395	5981.4395	0.0000		265466.5927	52283.3562	-0.0450
BF A2	2083.5501	-12.0000	5981.6074		0.0000		265465.3428	52283.3734	-0.0450
F-1	2086.3772	-12.0000	5981.9871		0.0000		265462.8376	52283.4359	-0.0450
F-2	2089.2688	-12.0000	5982.3754		0.0000		265460.3356	52283.5777	-0.0450
F-3	2092.1604	-12.0000	5982.7638		0.0000		265457.8396	52283.7998	-0.0450
BF AS2	2095.0520	-12.0000	5983.1522		0.0000		265455.3519	52284.1019	-0.0450

RIGHT CURB FLOWLINE

BENT LINE DESCRIPTION	STATION	OFFSET	TOP OF DECK ELEVATION	TOP OF DECK ELEV + DL	FROM LAYOUT LINE OFFSET, X	FROM LAYOUT LINE ORDINATE, Y	PROJECT COORDINATES NORTHING	PROJECT COORDINATES EASTING	ROADWAY CRS-SLP
BF AS1	2028.5501	12.0000	5977.0334		0.0000		265520.0065	52258.6169	0.0513
F-1	2031.0501	12.0000	5977.1930		0.0000		265517.5067	52258.6514	0.0497
F-2	2033.5501	12.0000	5977.3605		0.0000		265515.0069	52258.6859	0.0481
F-3	2036.0501	12.0000	5977.5357		0.0000		265512.5072	52258.7204	0.0466
BF A1	2038.5501	12.0000	5977.7192		0.0000		265510.0074	52258.7549	0.0450
CL BRG A1	2039.8001	12.0000	5977.8232	5977.8232	0.0000		265508.7575	52258.7721	0.0450
F-1	2044.0501	12.0000	5978.1914	5978.2014	0.0000		265504.5079	52258.8307	0.0450
F-2	2048.3001	12.0000	5978.5822	5978.6011	0.0000		265500.2583	52258.8894	0.0450
F-3	2052.5501	12.0000	5978.9956	5979.0215	0.0000		265496.0087	52258.9480	0.0450
F-4	2056.8001	12.0000	5979.4317	5979.4620	0.0000		265491.7591	52259.0066	0.0450
F-5	2061.0501	12.0000	5979.8903	5979.9222	0.0000		265487.5096	52259.0653	0.0450
F-6	2065.3001	12.0000	5980.3716	5980.4019	0.0000		265483.2600	52259.1239	0.0450
F-7	2069.5501	12.0000	5980.8755	5980.9014	0.0000		265479.0104	52259.1825	0.0450
F-8	2073.8001	12.0000	5981.4020	5981.4209	0.0000		265474.7608	52259.2412	0.0450
F-9	2078.0501	12.0000	5981.9511	5981.9611	0.0000		265470.5112	52259.2998	0.0450
CL BRG A2	2082.3001	12.0000	5982.5195	5982.5195	0.0000		265466.2616	52259.3585	0.0450
BF A2	2083.5501	12.0000	5982.6874		0.0000		265465.0117	52259.3757	0.0450
F-1	2085.8085	12.0000	5982.9907		0.0000		265462.5088	52259.4315	0.0450
F-2	2088.0175	12.0000	5983.2874		0.0000		265460.0081	52259.5478	0.0450
F-3	2090.2265	12.0000	5983.5841		0.0000		265457.5109	52259.7256	0.0450
BF AS2	2092.4355	12.0000	5983.8807		0.0000		265455.0189	52259.9645	0.0450

RIGHT EDGE OF SLAB

BENT LINE DESCRIPTION	STATION	OFFSET	TOP OF DECK ELEVATION	TOP OF DECK ELEV + DL	FROM LAYOUT LINE OFFSET, X	FROM LAYOUT LINE ORDINATE, Y	PROJECT COORDINATES NORTHING	PROJECT COORDINATES EASTING	ROADWAY CRS-SLP
BF AS1	2028.5501	13.2500	5977.0975		0.0000		265519.9892	52257.3670	0.0513
F-1	2031.0501	13.2500	5977.2552		0.0000		265517.4895	52257.4015	0.0497
F-2	2033.5501	13.2500	5977.4206		0.0000		265514.9897	52257.4360	0.0481
F-3	2036.0501	13.2500	5977.5939		0.0000		265512.4899	52257.4705	0.0466
BF A1	2038.5501	13.2500	5977.7754		0.0000		265509.9902	52257.5050	0.0450
CL BRG A1	2039.8001	13.2500	5977.8794	5977.8794	0.0000		265508.7403	52257.5222	0.0450
F-1	2044.0501	13.2500	5978.2476	5978.2576	0.0000		265504.4907	52257.5809	0.0450
F-2	2048.3001	13.2500	5978.6385	5978.6574	0.0000		265500.2411	52257.6395	0.0450
F-3	2052.5501	13.2500	5979.0519	5979.0778	0.0000		265495.9915	52257.6981	0.0450
F-4	2056.8001	13.2500	5979.4879	5979.5182	0.0000		265491.7419	52257.7568	0.0450
F-5	2061.0501	13.2500	5979.9466	5979.9784	0.0000		265487.4923	52257.8154	0.0450
F-6	2065.3001	13.2500	5980.4279	5980.4582	0.0000		265483.2427	52257.8740	0.0450
F-7	2069.5501	13.2500	5980.9317	5980.9576	0.0000		265478.9931	52257.9327	0.0450
F-8	2073.8001	13.2500	5981.4582	5981.4771	0.0000		265474.7435	52257.9913	0.0450
F-9	2078.0501	13.2500	5982.0073	5982.0173	0.0000		265470.4939	52258.0499	0.0450
CL BRG A2	2082.3001	13.2500	5982.5758	5982.5758	0.0000		265466.2443	52258.1086	0.0450
BF A2	2083.5501	13.2500	5982.7436		0.0000		265464.9944	52258.1258	0.0450
F-1	2085.7861	13.2500	5983.0440		0.0000		265462.4917	52258.1814	0.0450
F-2	2087.9683	13.2500	5983.3370		0.0000		265459.9909	52258.2968	0.0450
F-3	2090.1505	13.2500	5983.6301		0.0000		265457.4937	52258.4727	0.0450
BF AS2	2092.3327	13.2500	5983.9232		0.0000		265455.0015	52258.7091	0.0450

NOTES:

1. FOR NOTES AND LEGEND, SEE SHEET 1.

100% SET

CALL UTILITY NOTIFICATION CENTER OF COLORADO
CALL 2-BUSINESS DAYS IN ADVANCE BEFORE YOU DIG, GRADE, OR EXCAVATE FOR THE MARKING OF UNDERGROUND MEMBER UTILITIES

REVISIONS: NO.	DATE	REVISION DESCRIPTION:

BOULDER COUNTY TRANSPORTATION DEPARTMENT
ENGINEERING DIVISION

Michael Baker INTERNATIONAL

DESIGNED:	CAD:	CHECKED:	DATE:
SPO	BMT		11/4/2016

BOW MOUNTAIN BRIDGE
BRIDGE DECK ELEVATIONS (2 OF 2)

PROJECT NO: 4012.SEPT12C39 | SHEET NO: 117

mike.doyle 6:04:09 PM pw:\\DCPWAPP1.bkr.mbakercorp.com:pwprod\Documents\Projects\Lakewood_Office\Boulder_County_Emergency_Transportation\T04\08_Sheet_Files\06_Structures\DGN\Bridges\138200_BRDG_20.dgn