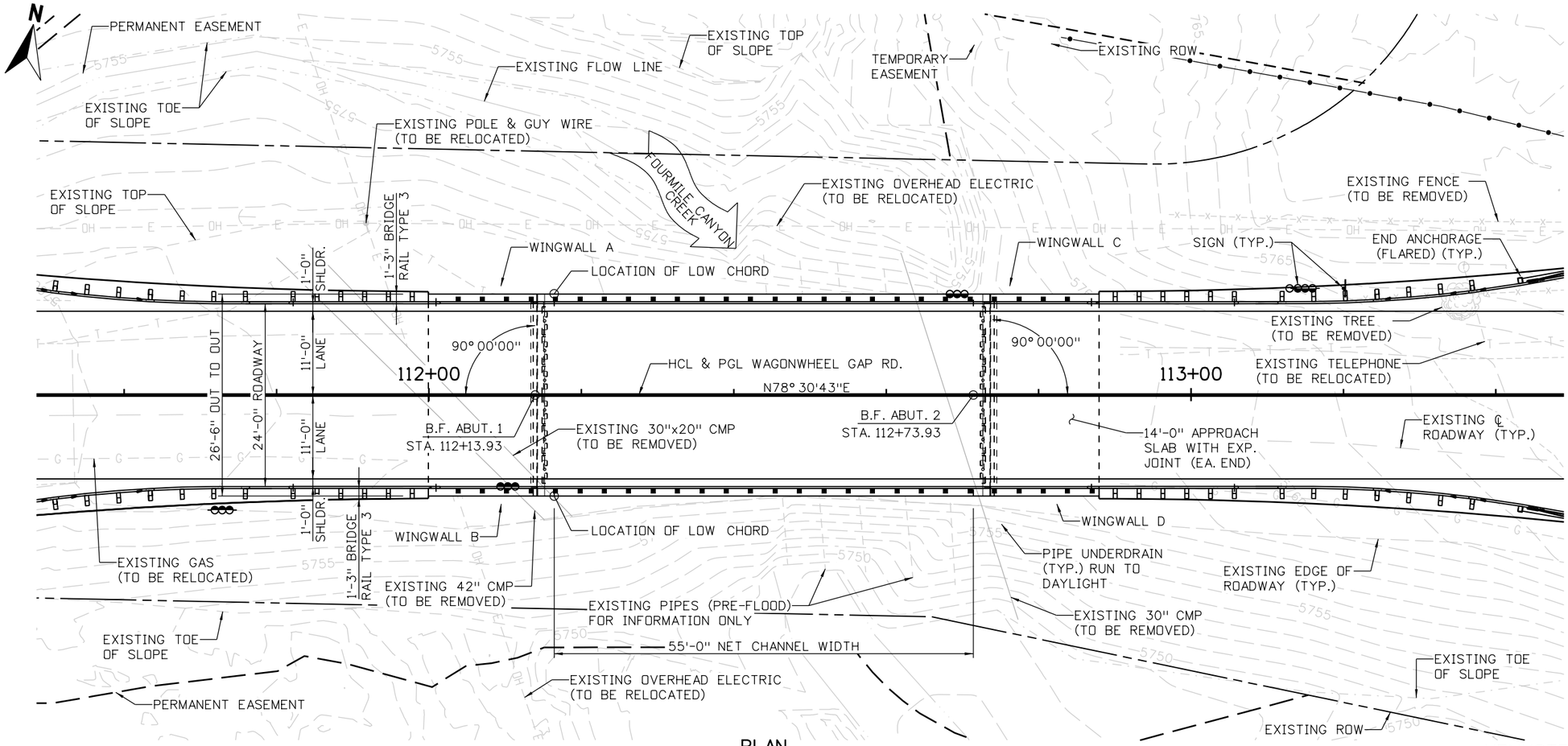

PLAN

NOTES:

1. FOR GUARDRAIL DETAILS REFER TO ROADWAY PLANS.
4. CREEK RESTORATION DETAILS HAVE NOT BEEN DETERMINED AT THIS TIME.
5. WAGON WHEEL GAP ROAD SHALL MAINTAIN TWO 10'-0" LANES WITH 1'-0" SHOULDERS UTILIZING A TEMPORARY SHOOFLY DURING BRIDGE CONSTRUCTION.

KEYNOTES:

(1) 1'-0" MIN. FREEBOARD FOR THE 100-YR HYDRAULIC GRADE LINE AND ABOVE THE 100-YEAR ENERGY GRADE LINE.

(2) ELEVATION SHOWN INCLUDES AN ADDITIONAL ½" GIRDER DEPTH TOLERNACE.

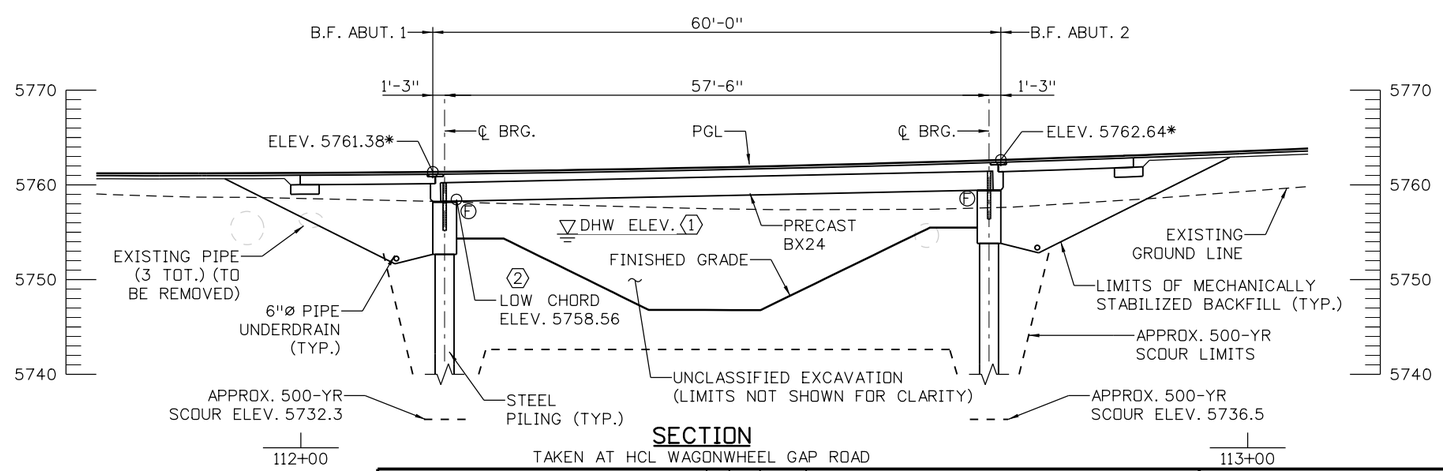

SECTION

TAKEN AT HCL WAGONWHEEL GAP ROAD

* FINISHED GRADE ELEVATIONS

8 0 8 16 FT
SCALE: 1"=16'

100% SET

CALL UTILITY NOTIFICATION CENTER OF COLORADO
CALL 2-BUSINESS DAYS IN ADVANCE BEFORE YOU DIG, GRADE, OR EXCAVATE FOR THE MARKING OF UNDERGROUND MEMBER UTILITIES

REVISIONS: NO.	DATE	REVISION DESCRIPTION:

BOULDER COUNTY TRANSPORTATION DEPARTMENT
ENGINEERING DIVISION
Michael Baker INTERNATIONAL

DESIGNED:	CAD:	CHECKED:	DATE:
DLT	BMT		11/4/2016

LEE HILL APPROACH BRIDGE
GENERAL LAYOUT
(1 OF 2)

PROJECT NO: 4043.SEPT12C34 | SHEET NO: 118

mike.doyle 6:04:29 PM 11/4/2016 pw:\\DCPWAPP1.bkr.mbakercorp.com:pwprod\Documents\Projects\Lakewood_Office\Boulder_County_Emergency_Transportation\T04\08_Sheet_Files\06_Structures\DGN\Bridges\138200_BRDG_21.dgn

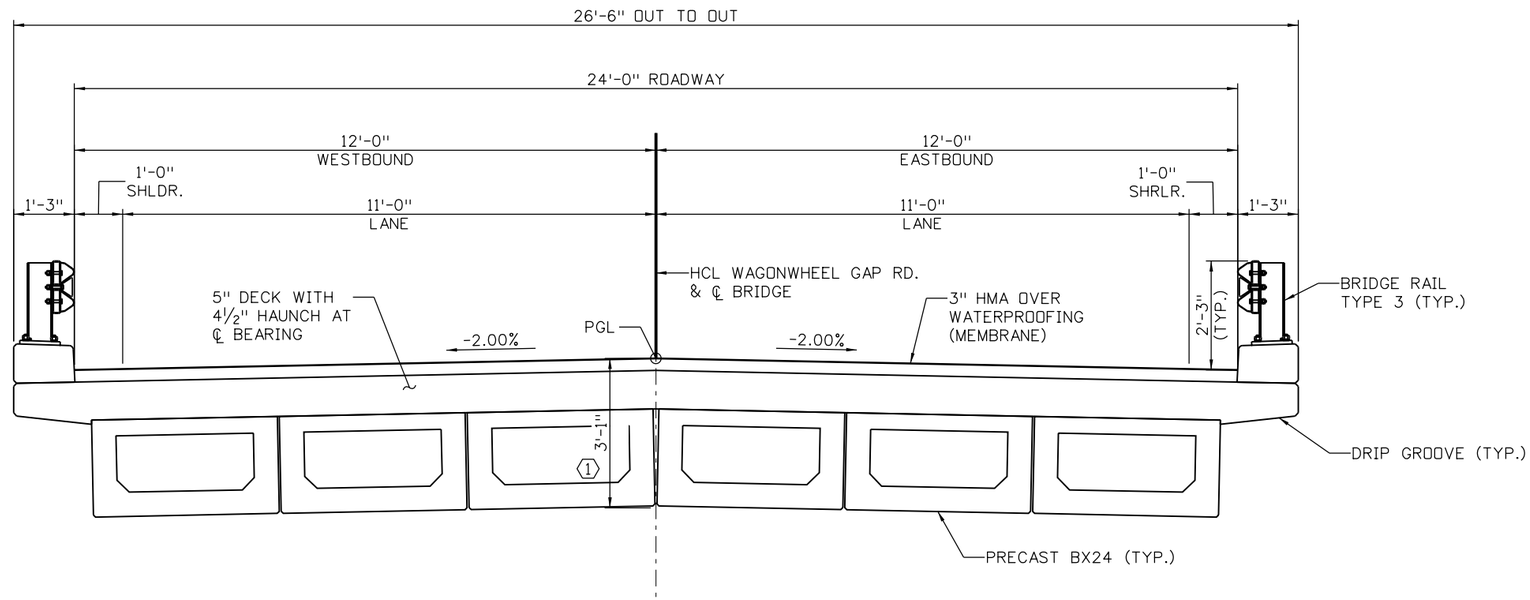

TYPICAL SECTION

LOOKING AHEAD STATION

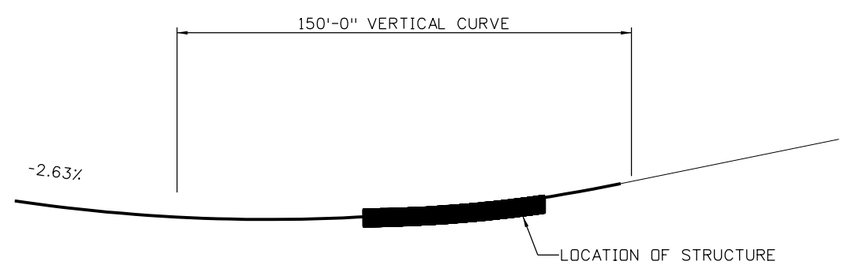

25 0 25 50 FT

SCALE: 1"=50'

ROADWAY PROFILE GRADE

WAGONWHEEL GAP ROAD

NOTES:

1. FOR STRUCTURAL CONCRETE COATINGS, REFER TO GENERAL INFORMATION SHEET.
2. HMA SHALL BE GRADING SX (75) (PG 58-28).

KEYNOTES:

1. INCLUDES AN ADDITIONAL ½" GIRDER DEPTH TOLERANCE.

100% SET

CALL UTILITY NOTIFICATION CENTER OF COLORADO
811
CALL 2-BUSINESS DAYS IN ADVANCE BEFORE YOU DIG, GRADE, OR EXCAVATE FOR THE MARKING OF UNDERGROUND MEMBER UTILITIES

REVISIONS:	NO.	DATE	REVISION DESCRIPTION:

Boulder County

Michael Baker INTERNATIONAL

BOULDER COUNTY TRANSPORTATION DEPARTMENT
ENGINEERING DIVISION

DESIGNED:	CAD:	CHECKED:	DATE:
DLT	BMT		11/4/2016

LEE HILL APPROACH BRIDGE
GENERAL LAYOUT
(2 OF 2)

PROJECT NO: 4043.SEPT12C34 SHEET NO: 119

mike.doyle 6:04:47 PM pw:\\DCPWAPP1.bkr.mbakercorp.com:pwprod\Documents\Projects\Lakewood_Office\Boulder_County_Emergency_Transportation\T04\08_Sheet_Files\06_Structures\DGN\Bridges\138200_BRDG_22.dgn

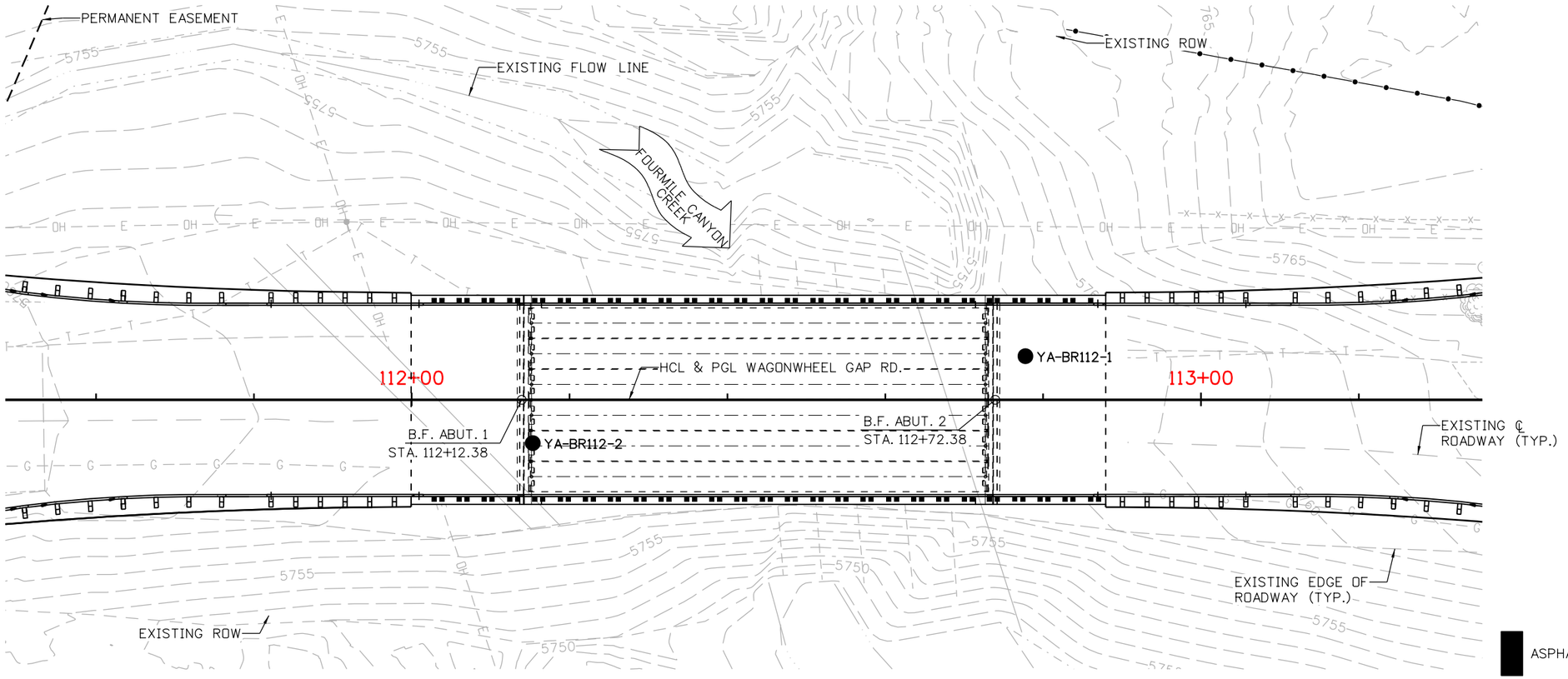

PLAN

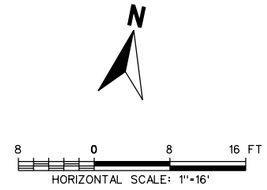

● APPROXIMATE BORING LOCATION

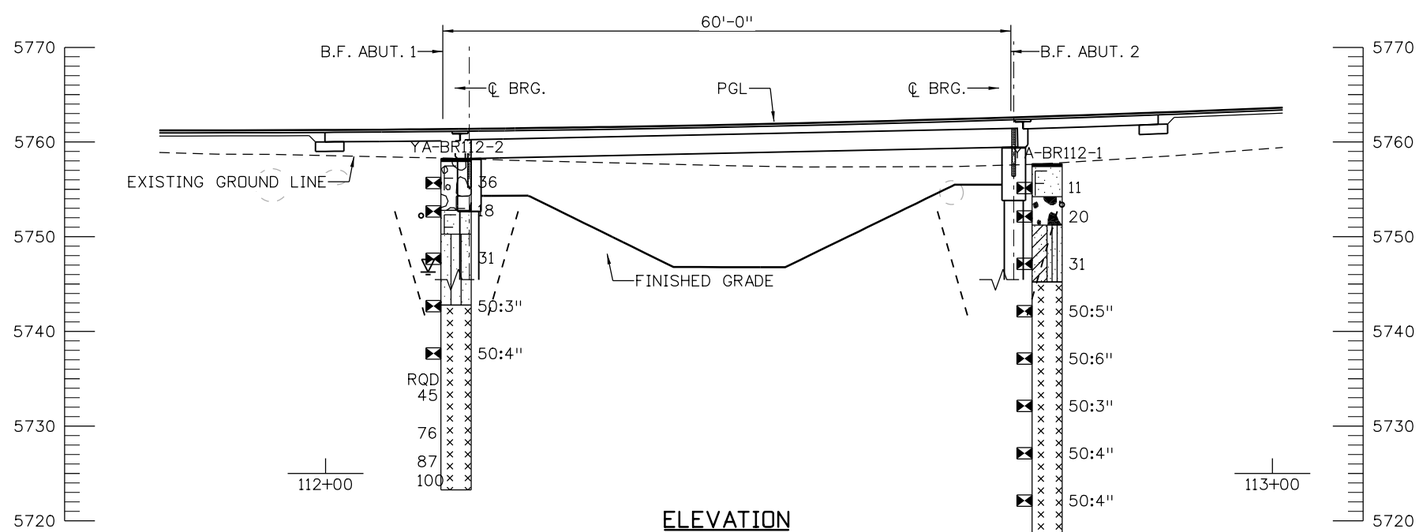

ELEVATION

TAKEN AT HCL WAGONWHEEL GAP ROAD

LEGEND

- ASPHALT
- FILL WITH SAND AS MAJOR SOIL
- USCS WELL-GRADED GRAVEL
- USCS CLAYEY SAND
- FILL WITH GRAVEL AS MAJOR SOIL
- USCS SILTY SAND
- SILTSTONE

TYPICAL BOREHOLE LOG

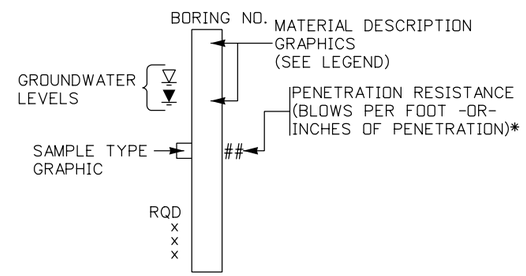

*E.G. A VALUE OF 50/3 OR 50:3 INDICATES THAT 50 BLOWS WERE APPLIED TO THE SAMPLER, WITH A PENETRATION OF 3 INCHES.

Yeh and Associates, Inc.
Consulting Engineers & Scientists

100% SET

CALL UTILITY NOTIFICATION CENTER OF COLORADO
811
CALL 2-BUSINESS DAYS IN ADVANCE BEFORE YOU DIG, GRADE, OR EXCAVATE FOR THE MARKING OF UNDERGROUND MEMBER UTILITIES

REVISIONS:	NO.	DATE	REVISION DESCRIPTION:

Boulder County

BOULDER COUNTY TRANSPORTATION DEPARTMENT
ENGINEERING DIVISION

Michael Baker INTERNATIONAL

DESIGNED:	CAD:	CHECKED:	DATE:
SCS	MJW		11/4/2016

LEE HILL APPROACH BRIDGE
ENGINEERING GEOLOGY

PROJECT NO: 4043.SEPT12C34 | SHEET NO: 120

Mike Walz 11:01:23 AM pw:\\DCPWAPP1.bkr.mbakercorp.com:pwprod\Documents\Projects\Lakewood_Office\Boulder_County_Emergency_Transportation\T04\08_Sheet_Files\01_Geotech\DGN\138200_BRDG_EG02.dgn

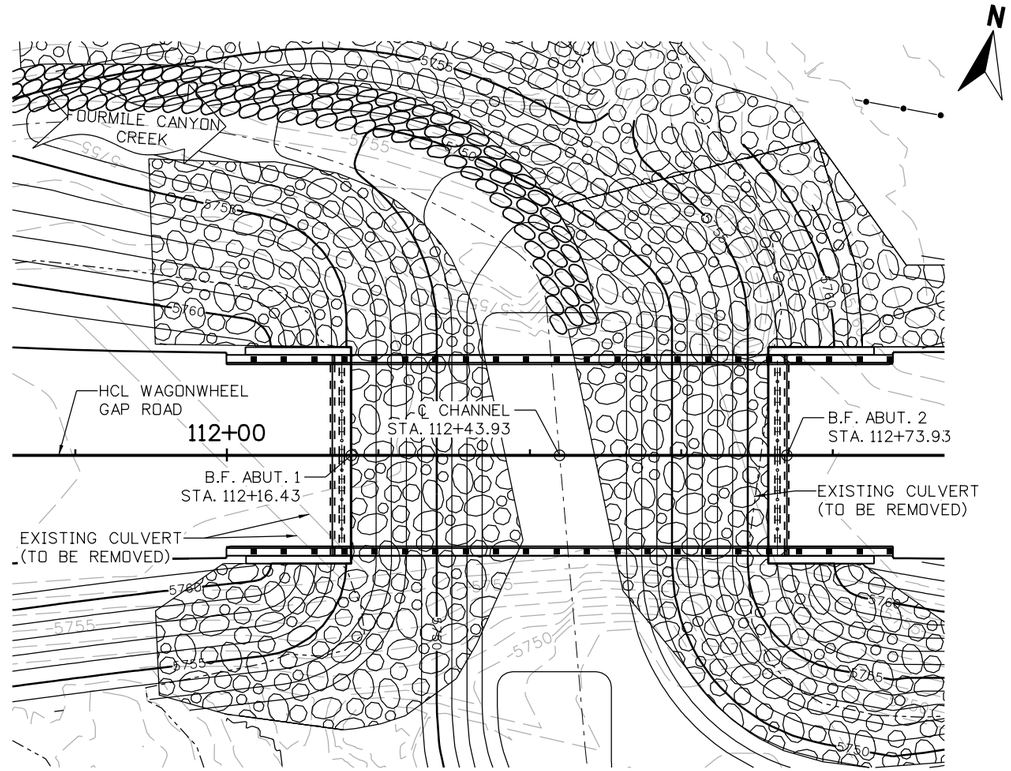

PROPOSED BRIDGE PLAN VIEW

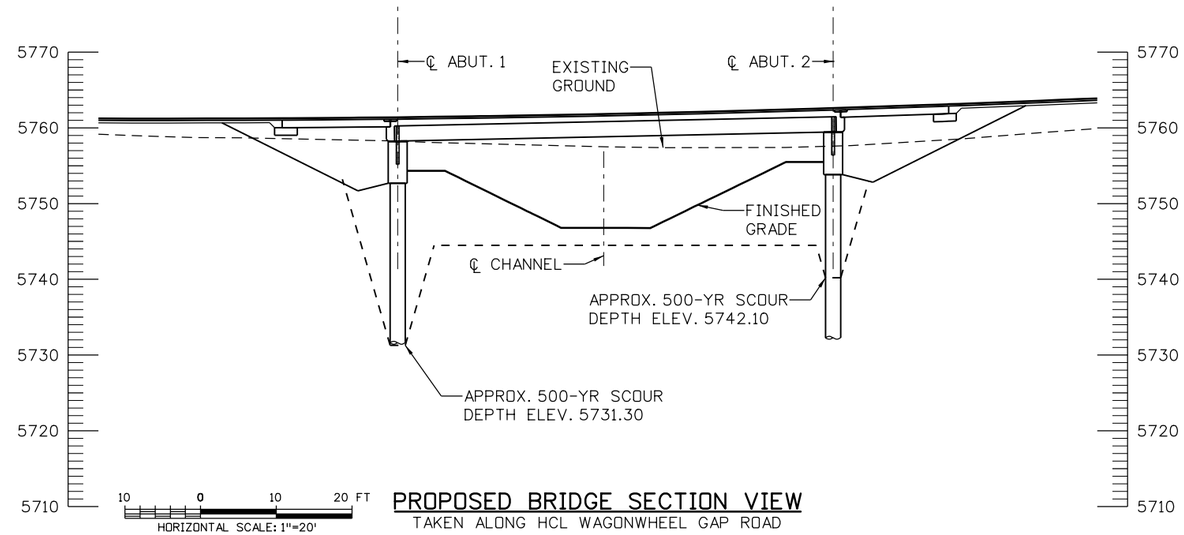

PROPOSED BRIDGE SECTION VIEW
TAKEN ALONG HCL WAGONWHEEL GAP ROAD

DATA FOR FOURMILE CANYON CREEK AT WAGONWHEEL GAP ROAD:

DRAINAGE AREA: UNKNOWN

AVERAGE CHANNEL SLOPE: 0.06 FT/FT

CHANNEL BOTTOM MATERIAL:

COHESIVE ☐ NON-COHESIVE ☒

BOTTOM MATERIAL SIZE: CLAY ☐ SILT ☐ SAND ☒
GRAVEL ☐ COBBLES ☒ OTHER ☐

STREAM FORM: STRAIGHT ☒ MEANDERING ☐ BRAIDED ☐

MANNINGS "n" FOR DESIGN:

CHANNEL = 0.065 OVERBANK = 0.015 TO 0.080

DEBRIS: BRUSH ☐ TREES/LOGS ☒ ICE ☐ OTHER ☐

COMPARISON OF HYDRAULICS

	VELOCITY	FREEBOARD	WSEL
EXISTING CULVERT	3.7 FT/S	N/A	5762.05
PROPOSED BRIDGE	9.8 FT/S	N/A	5756.51

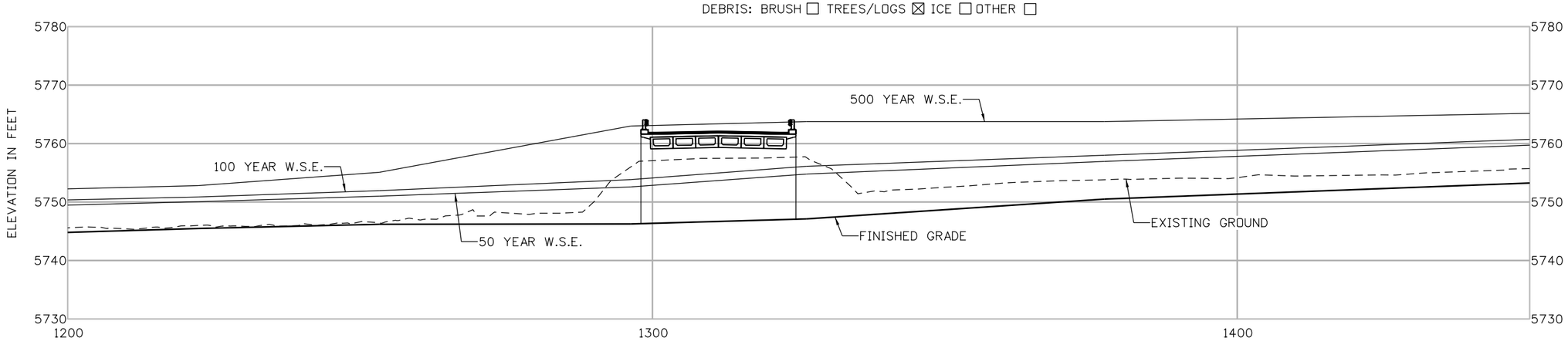

PROFILE OF WATER SURFACE
DISTANCE ALONG ℄ CHANNEL IN FEET

100% SET

CALL UTILITY NOTIFICATION CENTER OF COLORADO
811
CALL 2-BUSINESS DAYS IN ADVANCE BEFORE YOU DIG, GRADE, OR EXCAVATE FOR THE MARKING OF UNDERGROUND MEMBER UTILITIES

REVISIONS: NO.	DATE	REVISION DESCRIPTION:

BOULDER COUNTY TRANSPORTATION DEPARTMENT
ENGINEERING DIVISION
Boulder County
Michael Baker INTERNATIONAL

DESIGNED:	CAD:	CHECKED:	DATE:
CMM	BMT		11/4/2016

LEE HILL APPROACH BRIDGE
BRIDGE HYDRAULIC INFORMATION (1 OF 2)

PROJECT NO: 4043.SEPT12C34 SHEET NO: 121

mike.doyle 6:05:08 PM pw:\\DCPWAPP1.bkr.mbakercorp.com:pwprod\Documents\Projects\Lakewood_Office\Boulder_County_Emergency_Transportation\T04\08_Sheet_Files\06_Structures\DGN\Bridges\138200_BRDG_25.dgn

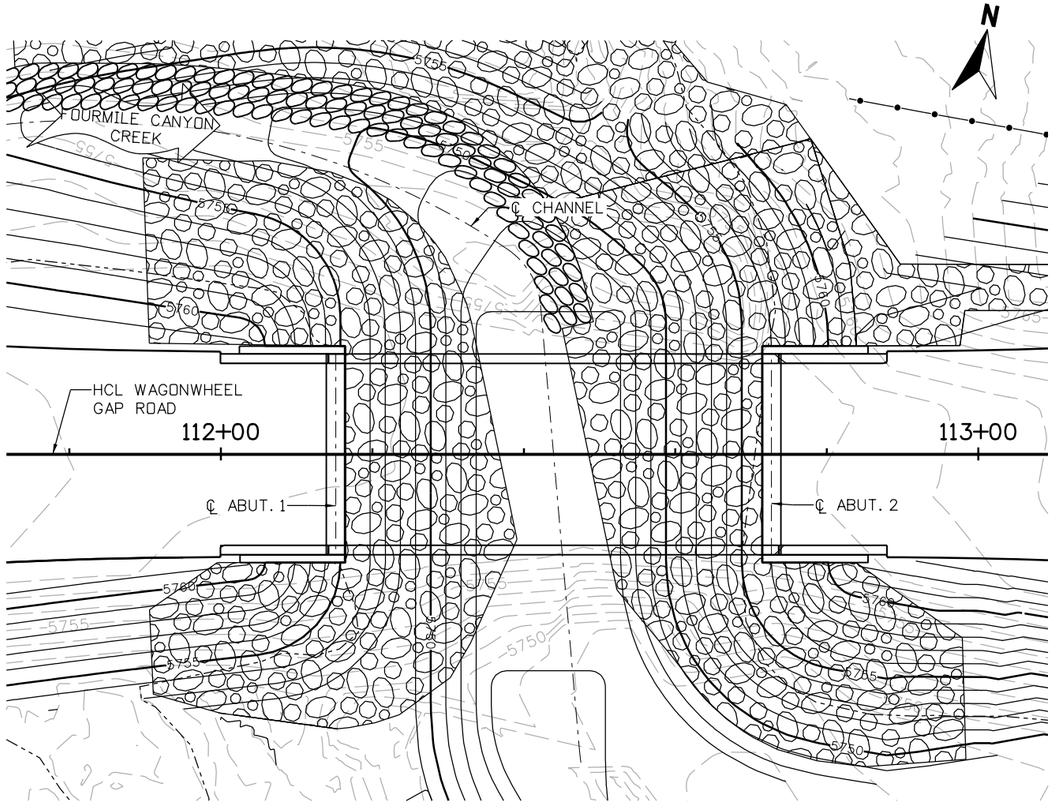

10 0 10 20 FT
HORIZONTAL SCALE: 1"=20'

(24 INCH) RIPRAP & GEOTEXTILE LIMITS PLAN

RIPRAP (24 INCH) & GEOTEXTILE LIMITS				
LOCATION		STATION	OFFSET	ELEVATION
ABUTMENT 1	A	111+99.54	14.29	5760.71
	B	111+90.59	20.54	5758.00
	C	111+91.14	31.46	5752.54
	D	112+01.09	34.54	5750.56
	E	112+04.50	31.38	5751.97
	F	112+12.77	31.19	5751.64
	G	112+15.39	36.25	5749.00
	H	112+23.63	34.37	5749.00
	I	112+30.30	29.48	5748.96
	J	112+39.14	11.24	5746.68
	K	112+32.46	19.86	5747.21
	L	112+29.60	26.01	5747.81
	M	112+22.49	33.52	5748.75
	N	112+14.62	37.27	5749.46
	O	112+06.33	38.78	5750.07
	P	111+89.71	39.14	5751.93
	Q	111+90.54	14.66	5760.93
	R	112+16.39	14.34	5754.50
	S	112+16.44	14.31	5754.17
ABUTMENT 2	T	112+98.38	40.26	5749.00
	U	112+97.34	24.28	5757.91
	V	112+83.91	14.29	5762.73
	W	112+71.43	14.3	5755.33
	X	112+71.44	14.3	5755.65
	Y	112+83.91	14.31	5762.00
	Z	112+83.06	24.98	5761.79
	AA	112+77.89	41.61	5762.11
	AB	112+43.28	32.86	5749.58
	AC	112+47.52	24.25	5749.28
	AD	112+49.18	17.49	5749.07
	AE	112+45.06	16.61	5746.96
	AF	112+52.30	17.92	5746.58
	AG	112+63.46	31.69	5749.01
	AH	112+69.53	36.95	5749.01
	AI	112+78.73	40.47	5748.99
	AJ	112+85.11	41.24	5749.00

ALL ELEVATIONS REPRESENT TOP OF RIPRAP

NOTES:

1. SEE TABULATION OF DRAINAGE AND EROSION CONTROL QUANTITIES.
2. SEE FINAL SWMP PLANS FOR EROSION CONTROL BLANKET LOCATIONS.
3. RIPRAP SPILLWAY QUANTIFIED AND PAID FOR SEPARATELY.
4. FOR GRADING AND CONTOUR INFORMATION, SEE DITCH AND CHANNEL GRADING PLAN.

100% SET

CALL UTILITY NOTIFICATION CENTER OF COLORADO
811
CALL 2-BUSINESS DAYS IN ADVANCE BEFORE YOU DIG, GRADE, OR EXCAVATE FOR THE MARKING OF UNDERGROUND MEMBER UTILITIES

REVISIONS: NO.	DATE	REVISION DESCRIPTION:

BOULDER COUNTY TRANSPORTATION DEPARTMENT
ENGINEERING DIVISION
Boulder County
Michael Baker INTERNATIONAL

DESIGNED:	CAD:	CHECKED:	DATE:
CMM	BMT		11/4/2016

LEE HILL APPROACH BRIDGE
BRIDGE HYDRAULIC INFORMATION (2 OF 2)
PROJECT NO: 4043.SEPT12C34 SHEET NO: 122

mike.doyle 6:05:28 PM pw:\\DCPWAPP1.bkr.mbakercorp.com:pwprod\Documents\Projects\Lakewood_Office\Boulder_County_Emergency_Transportation\T04\08_Sheet_Files\06_Structures\DGN\Bridges\138200_BRDG_26.dgn

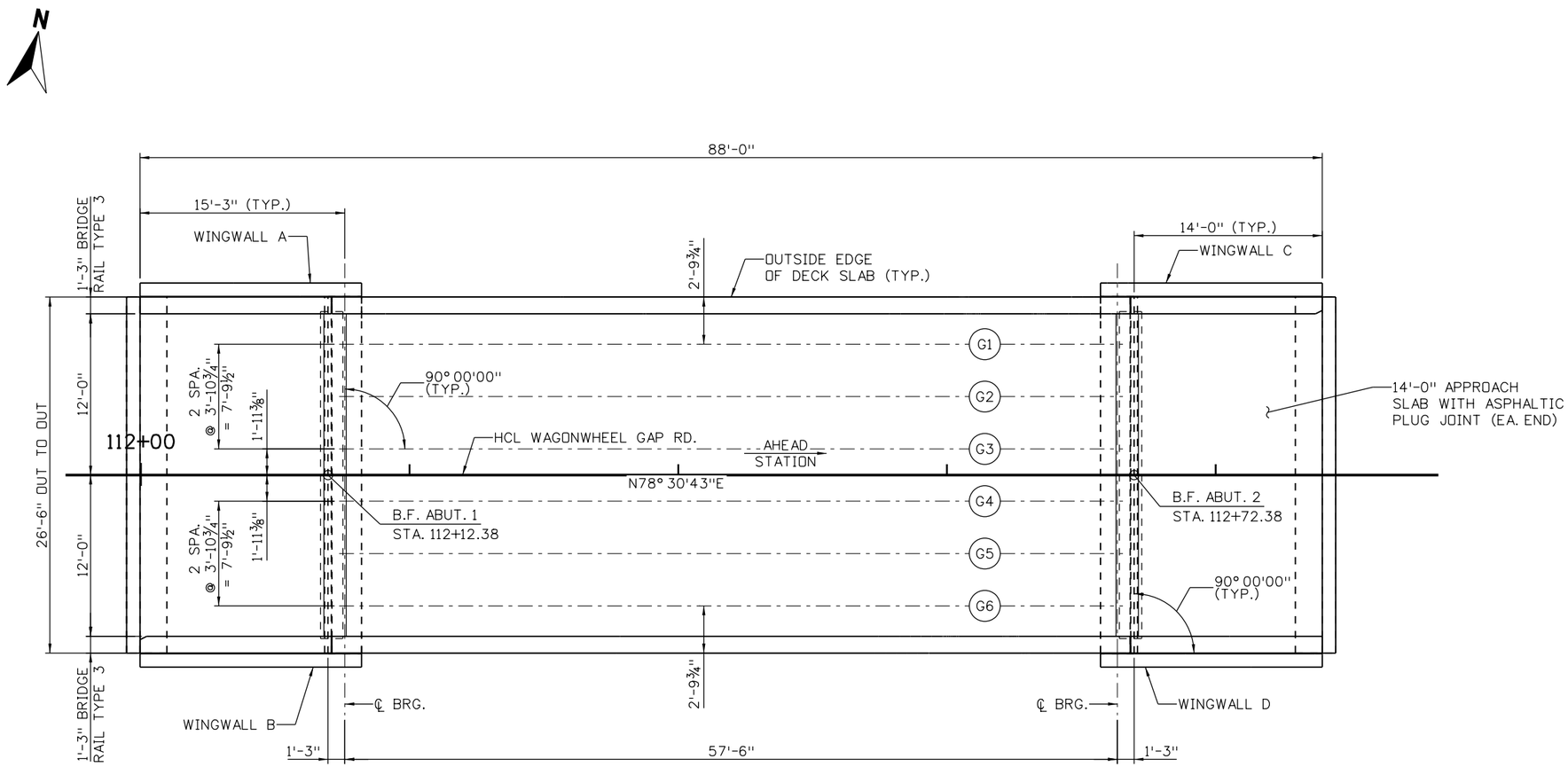

PLAN

5 0 5 10FT
SCALE: 1"=10'

100% SET

CALL UTILITY NOTIFICATION CENTER OF COLORADO
811
CALL 2-BUSINESS DAYS IN ADVANCE BEFORE YOU DIG, GRADE, OR EXCAVATE FOR THE MARKING OF UNDERGROUND MEMBER UTILITIES

REVISIONS:	NO.	DATE	REVISION DESCRIPTION:

Boulder County
Michael Baker INTERNATIONAL

BOULDER COUNTY TRANSPORTATION DEPARTMENT
ENGINEERING DIVISION

DESIGNED:	CAD:	CHECKED:	DATE:
SPO	BMT		11/4/2016

LEE HILL APPROACH BRIDGE
CONSTRUCTION LAYOUT

PROJECT NO: 4043.SEPT12C34 | SHEET NO: 123

mike.doyle 6:05:47 PM 11/4/2016 pw:\\DCPWAPP1.bkr.mbakercorp.com:pwprod\Documents\Projects\Lakewood_Office\Boulder_County_Emergency_Transportation\T04\08_Sheet_Files\06_Structures\DGN\Bridges\138200_BRDG_27.dgn

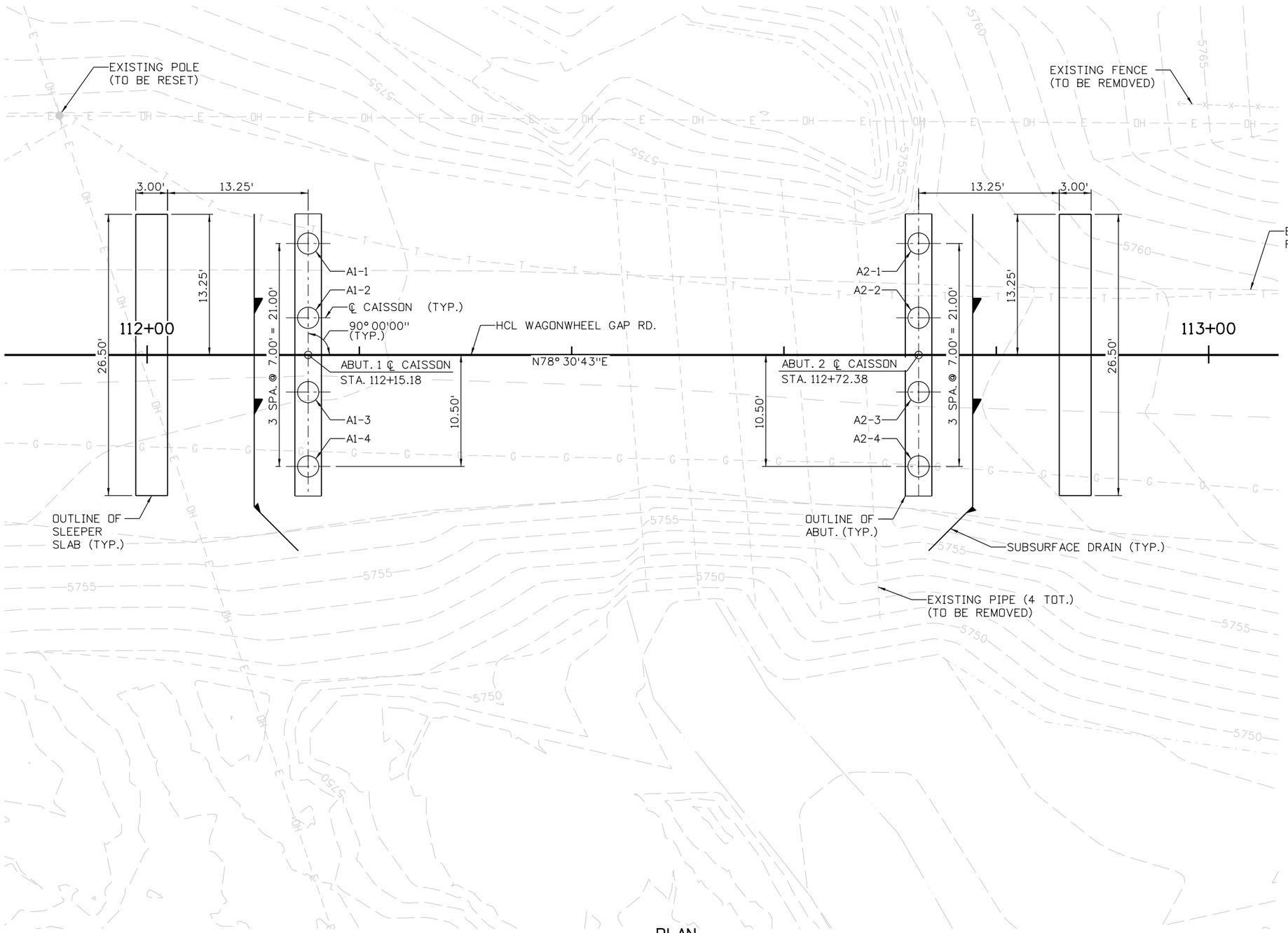

PLAN

NOTES:

1. FOR CAISSON DETAILS, SEE CAISSON DETAILS SHEET.
2. FOR UNDERDRAIN DETAILS, SEE MECHANICALLY STABILIZED BACKFILL SHEET.
3. CAISSON DETAILS, SEE CAISSON DETAILS SHEET.

Know what's below.
Call before you dig.

N

5 0 5 10FT
SCALE: 1"=10'

100% SET

CALL UTILITY NOTIFICATION CENTER OF COLORADO
811
CALL 2-BUSINESS DAYS IN ADVANCE BEFORE YOU DIG, GRADE, OR EXCAVATE FOR THE MARKING OF UNDERGROUND MEMBER UTILITIES

REVISIONS:	NO.	DATE	REVISION DESCRIPTION:

Boulder County

BOULDER COUNTY TRANSPORTATION DEPARTMENT
ENGINEERING DIVISION

Michael Baker INTERNATIONAL

DESIGNED:	CAD:	CHECKED:	DATE:
MCD	BMT		11/4/2016

LEE HILL APPROACH BRIDGE
FOUNDATION LAYOUT

PROJECT NO: 4043.SEPT12C34 | SHEET NO: 124

mike.doyle 6:06:08 PM 11/4/2016 pw:\\DCPWAPP1.bkr.mbakercorp.com:pwprod\Documents\Projects\Lakewood_Office\Boulder_County_Emergency_Transportation\T04\08_Sheet_Files\06_Structures\DGN\Bridges\138200_BRDG_28.dgn

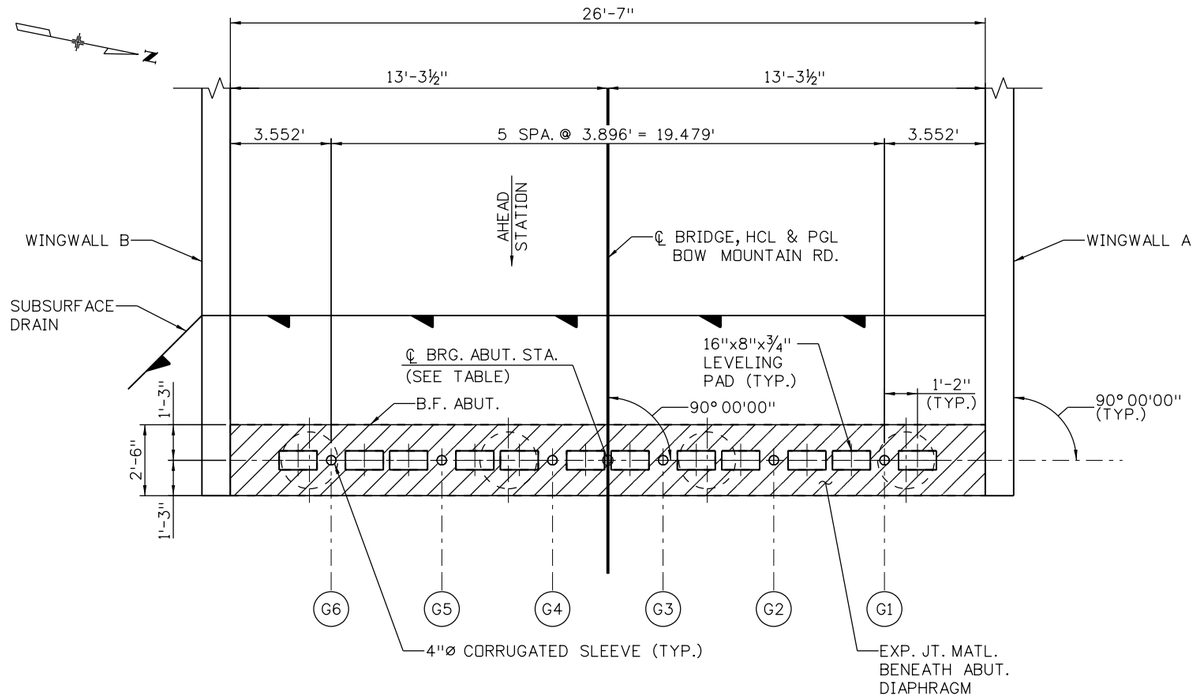

BEARING SEAT PLAN

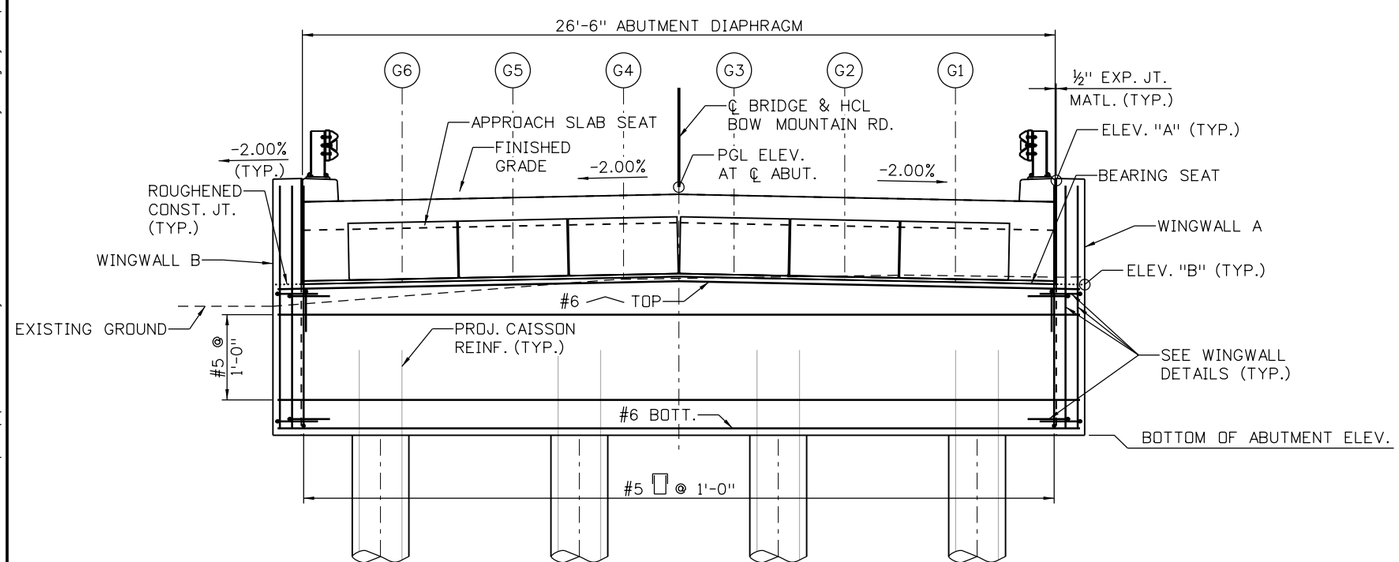

ELEVATION

NOTES:

1. ABUTMENT CONCRETE SHALL BE CONCRETE CLASS D (BRIDGE).
2. FOR ABUTMENT DIAPHRAGM DETAILS, SEE ABUTMENT DETAILS.
3. FOR UNDERDRAIN DETAILS, SEE MECHANICALLY STABILIZED BACKFILL SHEET.
4. ABUTMENT 1 SHOWN, ABUTMENT 2 SIMILAR BUT OPPOSITE HAND.

ABUTMENT 1 BEARING SEAT ELEVATIONS TABLE

GIRDER	G6	G5	G4	G3	G2	G1
ELEVATION	5758.50	5758.58	5758.66	5758.66	5758.58	5758.50

ABUTMENT 1 ELEVATIONS TABLE

LOCATION	ELEVATION
STATION AT ℄ ABUTMENT	112+15.18
PGL AT ℄ ABUTMENT	5761.39
"A"	5761.64
"B"	5757.98
BOTTOM OF ABUTMENT	5752.67

ABUTMENT 2 BEARING SEAT ELEVATIONS TABLE

GIRDER	G1	G2	G3	G4	G5	G6
ELEVATION	5759.31	5759.39	5759.47	5759.47	5759.39	5759.31

ABUTMENT 2 ELEVATIONS TABLE

LOCATION	ELEVATION
STATION AT ℄ ABUTMENT	112+72.68
PGL AT ℄ ABUTMENT	5762.60
"A"	5762.91
"B"	5759.17
BOTTOM OF ABUTMENT	5753.83

100% SET

CALL UTILITY NOTIFICATION CENTER OF COLORADO
811
CALL 2-BUSINESS DAYS IN ADVANCE BEFORE YOU DIG, GRADE, OR EXCAVATE FOR THE MARKING OF UNDERGROUND MEMBER UTILITIES

REVISIONS:	NO.	DATE	REVISION DESCRIPTION:

Boulder County

BOULDER COUNTY TRANSPORTATION DEPARTMENT
ENGINEERING DIVISION

Michael Baker INTERNATIONAL

DESIGNED:	CAD:	CHECKED:	DATE:
MCD	BMT		11/4/2016

LEE HILL APPROACH BRIDGE
ABUTMENT 1 & 2

PROJECT NO: 4043.SEPT12C34 | SHEET NO: 125

mike.doyle 6:06:26 PM pw:\\DCPWAPP1.bkr.mbakercorp.com:pwprod\Documents\Projects\Lakewood_Office\Boulder_County_Emergency_Transportation\T04\08_Sheet_Files\06_Structures\DGN\Bridges\138200_BRDG_29.dgn

NOTES:

1. ASPALTIC PLUG AND APPROACH SLAB SEAT SHALL BE SET TO MATCH LONGITUDINAL GRADE.

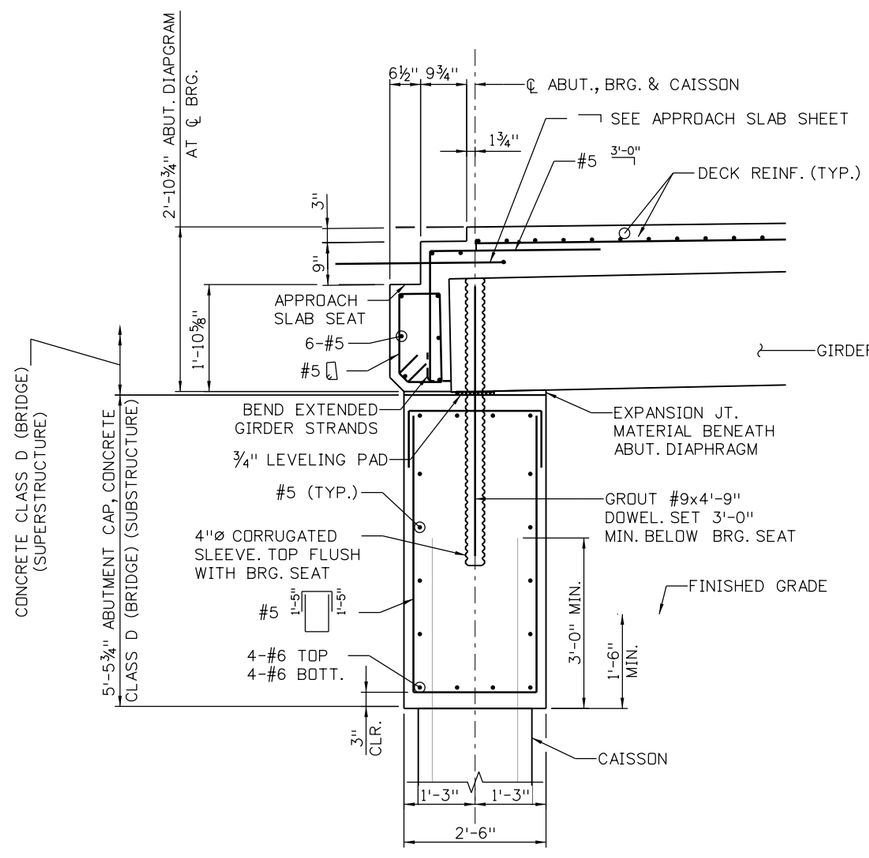

TYPICAL SECTION

ASPHALTIC PLUG AND HMA NOT SHOWN

100% SET

CALL UTILITY NOTIFICATION CENTER OF COLORADO

811

CALL 2-BUSINESS DAYS IN ADVANCE BEFORE YOU DIG, GRADE, OR EXCAVATE FOR THE MARKING OF UNDERGROUND MEMBER UTILITIES

REVISIONS:	NO.	DATE	REVISION DESCRIPTION:

Boulder County

Michael Baker INTERNATIONAL

BOULDER COUNTY TRANSPORTATION DEPARTMENT
ENGINEERING DIVISION

DESIGNED:	CAD:	CHECKED:	DATE:
MCD	BMT		11/4/2016

LEE HILL APPROACH BRIDGE
ABUTMENT DETAILS

PROJECT NO: 4043.SEPT12C34 | SHEET NO: 126

mike.doyle 6:06:43 PM pw:\\DCPWAPP1.bkr.mbakercorp.com:pwprod\Documents\Projects\Lakewood_Office\Boulder_County_Emergency_Transportation\T04\08_Sheet_Files\06_Structures\DGN\Bridges\138200_BRDG_30.dgn

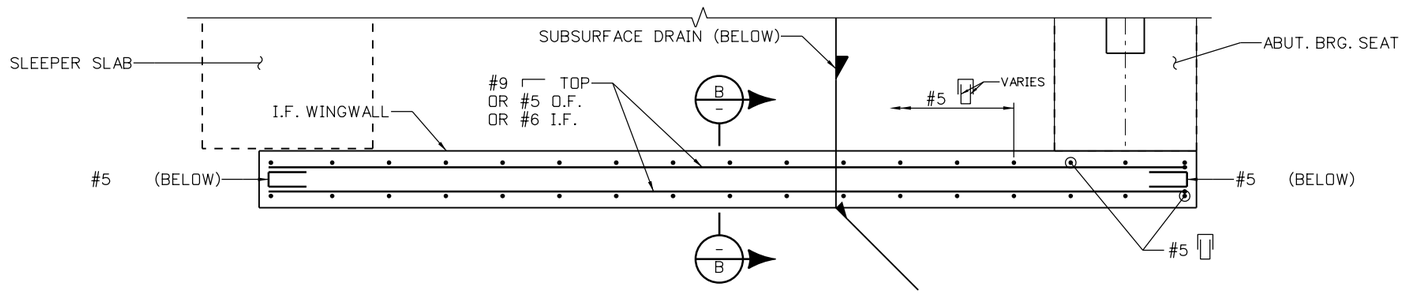

PLAN

ABOVE BEARING SEAT REINF. SHOWN
SUPERSTRUCTURE NOT SHOWN

NOTES:

1. WINGWALL CONCRETE SHALL BE CONCRETE CLASS D.
2. WINGWALL A SHOWN, OTHERS SIMILAR.
3. FOR SECTIONS A AND B, SEE SHEET 2 OF 2.

KEYNOTES:

(1) 3" FOR BACK FACE.

WINGWALL ELEVATIONS TABLE	
WINGWALL	ELEV. kT
A & B	5761.57
C & D	5763.42

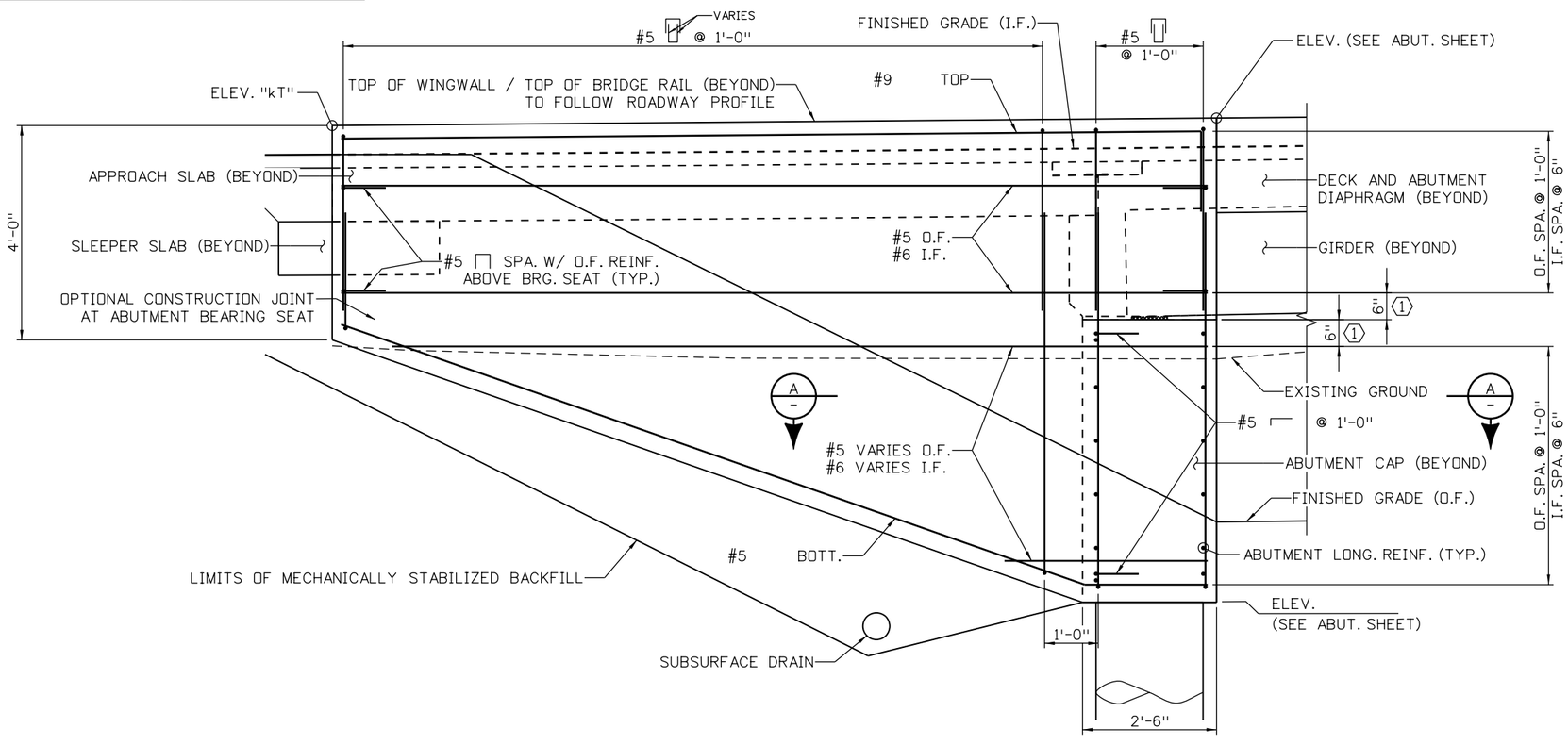

ELEVATION

SUBTITLES (PLACE BELOW TITLE STANDARD TEXT HEIGHT X 2.25)

100% SET

CALL UTILITY NOTIFICATION CENTER OF COLORADO
811
CALL 2-BUSINESS DAYS IN ADVANCE BEFORE YOU DIG, GRADE, OR EXCAVATE FOR THE MARKING OF UNDERGROUND MEMBER UTILITIES

REVISIONS: NO.	DATE	REVISION DESCRIPTION:

Boulder County
Michael Baker INTERNATIONAL

BOULDER COUNTY TRANSPORTATION DEPARTMENT
ENGINEERING DIVISION

DESIGNED:	CAD:	CHECKED:	DATE:
SPO	BMT		11/4/2016

LEE HILL APPROACH BRIDGE
WINGWALL DETAILS
(1 OF 2)

PROJECT NO: 4043.SEPT12C34 | SHEET NO: 127

mike.doyle 6:06:59 PM pw:\\DCPWAPP1.bkr.mbakercorp.com:pwprod\Documents\Projects\Lakewood_Office\Boulder_County_Emergency_Transportation\T04\08_Sheet_Files\06_Structures\DGN\Bridges\138200_BRDG_33.dgn

NOTES:

1. SEE SHEET 1 OF 2 FOR PLAN AND ELEVATION.

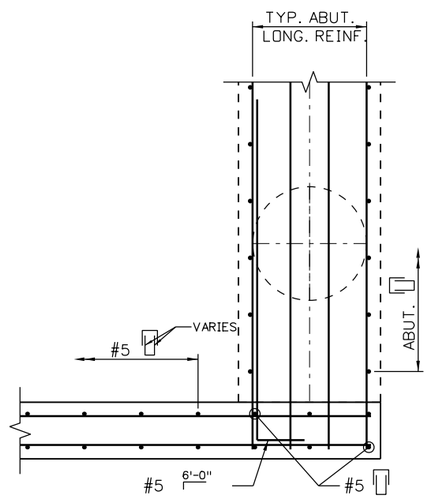

SECTION A

PROJ. CAISSON REINF. NOT SHOWN

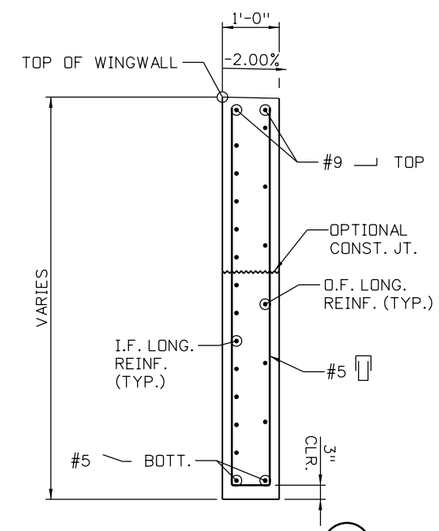

TYPICAL SECTION B

100% SET

CALL UTILITY NOTIFICATION CENTER OF COLORADO
CALL 2-BUSINESS DAYS IN ADVANCE BEFORE YOU DIG, GRADE, OR EXCAVATE FOR THE MARKING OF UNDERGROUND MEMBER UTILITIES

REVISIONS:	NO.	DATE	REVISION DESCRIPTION:

BOULDER COUNTY TRANSPORTATION DEPARTMENT
ENGINEERING DIVISION

Michael Baker INTERNATIONAL

DESIGNED:	CAD:	CHECKED:	DATE:
SPO	BMT		11/4/2016

LEE HILL APPROACH BRIDGE
WINGWALL DETAILS (2 OF 2)

PROJECT NO: 4043.SEPT12C34 | SHEET NO: 128

mike.doyle 6:07:15 PM pw:\\DCPWAPP1.bkr.mbakercorp.com:pwprod\Documents\Projects\Lakewood_Office\Boulder_County_Emergency_Transportation\T04\08_Sheet_Files\06_Structures\DGN\Bridges\138200_BRDG_34.dgn

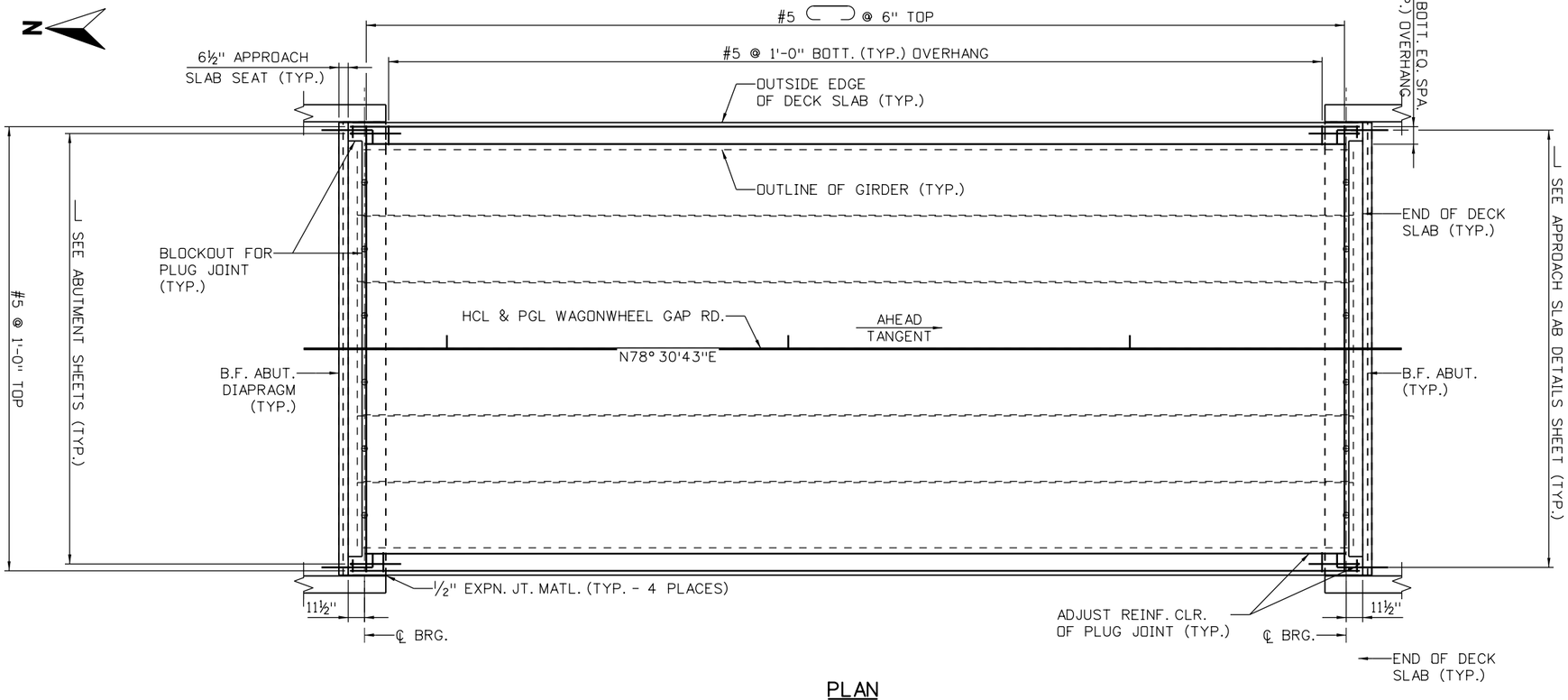

PLAN

SCALE: ⅛" = 1'-0"

NOTES:

1. DECK SLAB SHALL BE CONCRETE CLASS D (BRIDGE).
2. PROJECTING BRIDGE RAIL REINFORCEMENT NOT SHOWN. FOR RAILING DETAILS, SEE BRIDGE RAIL TYPE 3.
3. THE CONTRACTOR MAY ELECT TO SPLICE TOP REINFORCEMENT. ALTERNATE ALL LAP SPLICES.

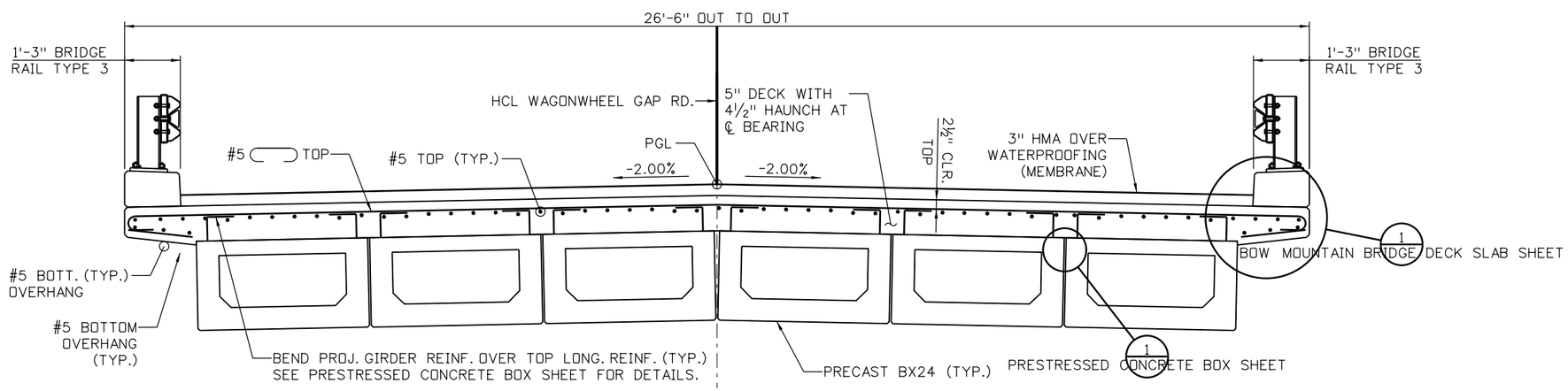

TYPICAL SECTION

LOOKING AHEAD STATION
N.T.S.

4 0 4 8 FT
SCALE: 1"=8'

100% SET

CALL UTILITY NOTIFICATION CENTER OF COLORADO
811
CALL 2-BUSINESS DAYS IN ADVANCE BEFORE YOU DIG, GRADE, OR EXCAVATE FOR THE MARKING OF UNDERGROUND MEMBER UTILITIES

REVISIONS:	NO.	DATE	REVISION DESCRIPTION:

Boulder County
Michael Baker INTERNATIONAL

BOULDER COUNTY TRANSPORTATION DEPARTMENT
ENGINEERING DIVISION

DESIGNED:	CAD:	CHECKED:	DATE:
SPO	BMT		11/4/2016

LEE HILL APPROACH BRIDGE
DECK SLAB DETAILS

PROJECT NO: 4043.SEPT12C34 | SHEET NO: 129

mike.doyle 6:07:31 PM pw:\\DCPWAPP1.bkr.mbakercorp.com:pwprod\Documents\Projects\Lakewood_Office\Boulder_County_Emergency_Transportation\T04\08_Sheet_Files\06_Structures\DGN\Bridges\138200_BRDG_35.dgn

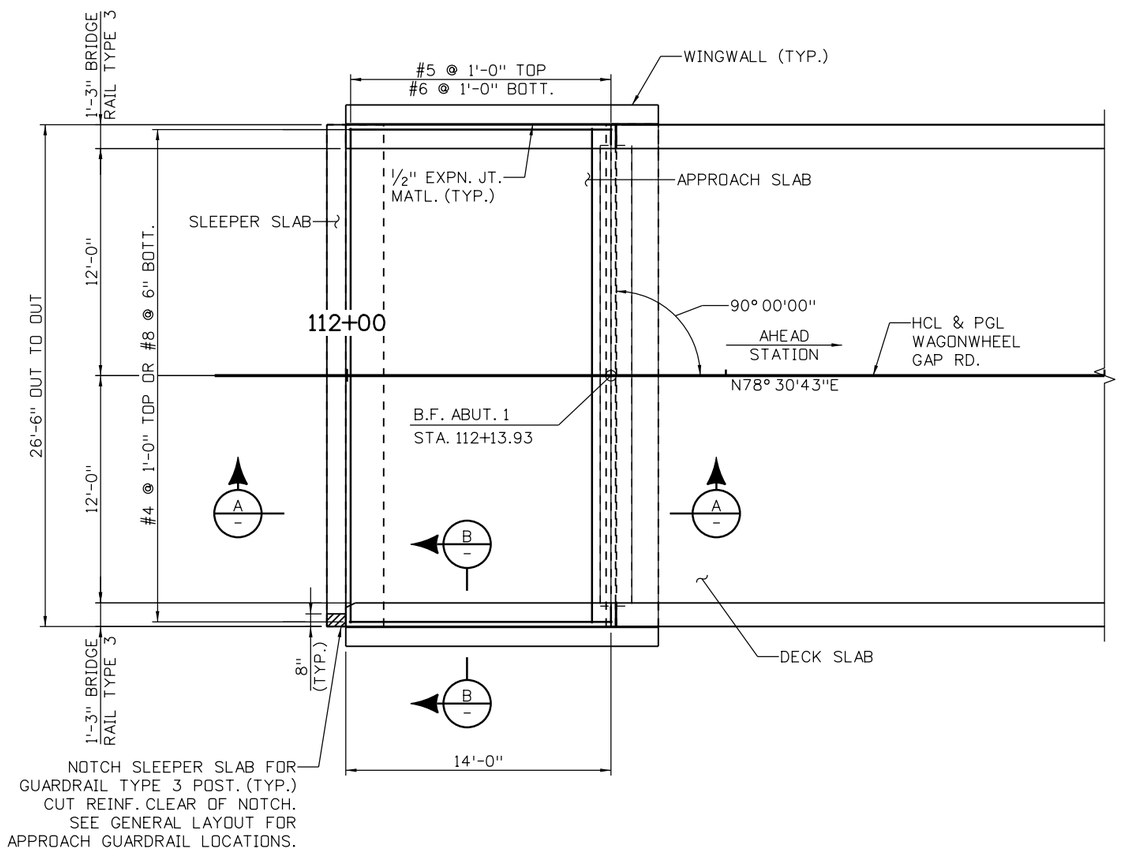

PLAN

SCALE: 1/8" = 1'-0"
PROJ. DECK SLAB REINF. AND HMA NOT SHOWN

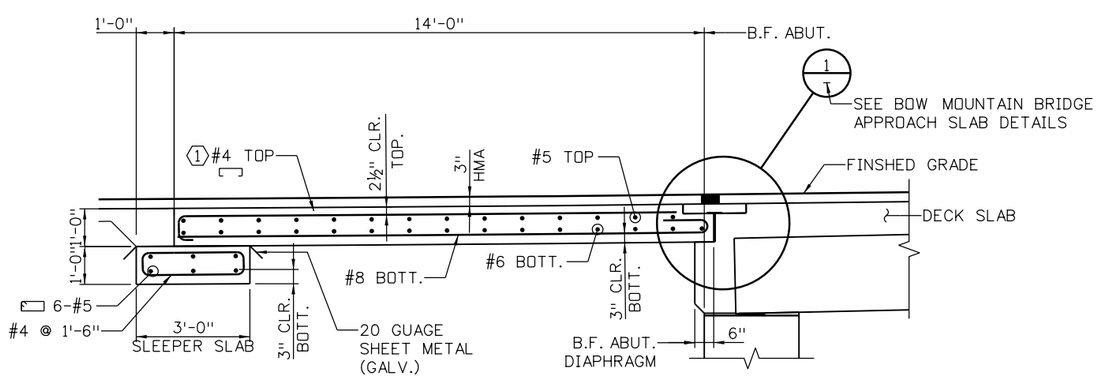

TYPICAL SECTION A

SCALE: 1/4" = 1'-0"

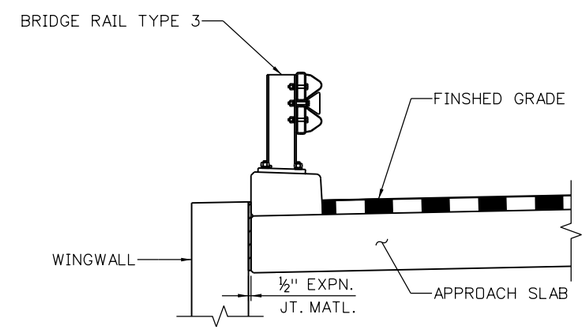

SECTION B

SCALE: 3/8" = 1'-0"

NOTES:

1. APPROACH SLAB AND SLEEPER SLAB CONCRETE SHALL BE CONCRETE CLASS D (BRIDGE).
2. BRIDGE RAIL NOT SHOWN UNLESS NOTED OTHERWISE. FOR BRIDGE RAIL REINFORCING DETAILS SEE BRIDGE RAIL TYPE 3 SHEET.
3. SHEET METAL, EXPANSION JOINT MATERIAL AND JOINT FILLER SHALL BE INCLUDED WITH ITEM 601 CONCRETE CLASS D (BRIDGE).
4. APPROACH SLAB 1 SHOWN, APPROACH SLAB 2 SIMILAR.

KEYNOTES:

1. CONTRACTOR MAY USE 1'-0" IN LIEU OF

100% SET

CALL UTILITY NOTIFICATION CENTER OF COLORADO
CALL 2-BUSINESS DAYS IN ADVANCE BEFORE YOU DIG, GRADE, OR EXCAVATE FOR THE MARKING OF UNDERGROUND MEMBER UTILITIES

REVISIONS:	NO.	DATE	REVISION DESCRIPTION:

BOULDER COUNTY TRANSPORTATION DEPARTMENT
ENGINEERING DIVISION
Michael Baker INTERNATIONAL

DESIGNED:	CAD:	CHECKED:	DATE:
SPO	BMT		11/4/2016

LEE HILL APPROACH BRIDGE
APPROACH SLAB DETAILS

PROJECT NO: 4043.SEPT12C34 | SHEET NO: 130

mike.doyle 6:07:49 PM pw:\\DCPWAPP1.bkr.mbakercorp.com:pwprod\Documents\Projects\Lakewood_Office\Boulder_County_Emergency_Transportation\T04\08_Sheet_Files\06_Structures\DGN\Bridges\138200_BRDG_36.dgn

HORIZONTAL CONTROL LINE

BENT LINE DESCRIPTION	STATION	OFFSET	FINISHED GRADE ELEVATION	PROJECT COORDINATES NORTHING	PROJECT COORDINATES EASTING	ROADWAY CRS-SLP
BEGIN AS1	111+99.9300	0.0000	5761.2665	266897.3734	56517.4286	
BF A1	112+13.9300	0.0000	5761.3802	266900.1617	56531.1482	
CL BRG A1	112+15.1800	0.0000	5761.3937	266900.4106	56532.3731	
CL BRG A2	112+72.6800	0.0000	5762.6044	266911.8625	56588.7212	
BF A2	112+73.9300	0.0000	5762.6435	266912.1114	56589.9462	
END AS2	112+87.9300	0.0000	5763.1194	266914.8997	56603.6657	

CL GIRDER 1

BENT LINE DESCRIPTION	STATION	OFFSET	TOP OF DECK ELEVATION	DEAD LOAD DEFLECTION	TOP OF DECK ELEV + DL	PROJECT COORDINATES NORTHING	PROJECT COORDINATES EASTING	ROADWAY CRS-SLP
CL BRG A1	112+15.1800	-10.1042	5760.9416	0.0000	5760.9416	266910.0635	56529.1358	-0.0200
F-1	112+20.9300	-10.1042	5761.0107	0.0200	5761.0307	266910.3124	56530.3607	-0.0200
F-2	112+26.6800	-10.1042	5761.0913	0.0379	5761.1292	266911.4576	56535.9955	-0.0200
F-3	112+32.4300	-10.1042	5761.1835	0.0518	5761.2353	266912.6028	56541.6304	-0.0200
F-4	112+38.1800	-10.1042	5761.2872	0.0607	5761.3479	266913.7480	56547.2652	-0.0200
F-5	112+43.9300	-10.1042	5761.4025	0.0638	5761.4662	266914.8932	56552.9000	-0.0200
F-6	112+49.6800	-10.1042	5761.5293	0.0607	5761.5900	266916.0383	56558.5348	-0.0200
F-7	112+55.4300	-10.1042	5761.6677	0.0518	5761.7196	266917.1835	56564.1696	-0.0200
F-8	112+61.1800	-10.1042	5761.8177	0.0379	5761.8556	266918.3287	56569.8044	-0.0200
F-9	112+66.9300	-10.1042	5761.9792	0.0200	5761.9992	266919.4739	56575.4392	-0.0200
CL BRG A2	112+72.6800	-10.1042	5762.1523	0.0000	5762.1523	266920.6191	56581.0740	-0.0200

CL GIRDER 2

BENT LINE DESCRIPTION	STATION	OFFSET	TOP OF DECK ELEVATION	DEAD LOAD DEFLECTION	TOP OF DECK ELEV + DL	PROJECT COORDINATES NORTHING	PROJECT COORDINATES EASTING	ROADWAY CRS-SLP
CL BRG A1	112+15.1800	-6.0625	5761.0224	0.0000	5761.0224	266906.3517	56531.1657	-0.0200
F-1	112+20.9300	-6.0625	5761.0915	0.0165	5761.1080	266907.4969	56536.8005	-0.0200
F-2	112+26.6800	-6.0625	5761.1721	0.0312	5761.2034	266908.6421	56542.4353	-0.0200
F-3	112+32.4300	-6.0625	5761.2643	0.0428	5761.3071	266909.7872	56548.0701	-0.0200
F-4	112+38.1800	-6.0625	5761.3680	0.0501	5761.4181	266910.9324	56553.7049	-0.0200
F-5	112+43.9300	-6.0625	5761.4833	0.0526	5761.5359	266912.0776	56559.3397	-0.0200
F-6	112+49.6800	-6.0625	5761.6102	0.0501	5761.6602	266913.2228	56564.9745	-0.0200
F-7	112+55.4300	-6.0625	5761.7486	0.0428	5761.7913	266914.3680	56570.6093	-0.0200
F-8	112+61.1800	-6.0625	5761.8985	0.0312	5761.9298	266915.5132	56576.2442	-0.0200
F-9	112+66.9300	-6.0625	5762.0601	0.0165	5762.0766	266916.6583	56581.8790	-0.0200
CL BRG A2	112+72.6800	-6.0625	5762.2331	0.0000	5762.2331	266917.8035	56587.5138	-0.0200

CL GIRDER 3

BENT LINE DESCRIPTION	STATION	OFFSET	TOP OF DECK ELEVATION	DEAD LOAD DEFLECTION	TOP OF DECK ELEV + DL	PROJECT COORDINATES NORTHING	PROJECT COORDINATES EASTING	ROADWAY CRS-SLP
CL BRG A1	112+15.1800	-2.0208	5761.1033	0.0000	5761.1033	266902.3910	56531.9707	-0.0200
F-1	112+20.9300	-2.0208	5761.1723	0.0165	5761.1888	266903.5361	56537.6055	-0.0200
F-2	112+26.6800	-2.0208	5761.2530	0.0312	5761.2842	266904.6813	56543.2403	-0.0200
F-3	112+32.4300	-2.0208	5761.3451	0.0428	5761.3879	266905.8265	56548.8751	-0.0200
F-4	112+38.1800	-2.0208	5761.4489	0.0501	5761.4989	266906.9717	56554.5099	-0.0200
F-5	112+43.9300	-2.0208	5761.5642	0.0526	5761.6167	266908.1169	56560.1447	-0.0200
F-6	112+49.6800	-2.0208	5761.6910	0.0501	5761.7411	266909.2621	56565.7795	-0.0200
F-7	112+55.4300	-2.0208	5761.8294	0.0428	5761.8722	266910.4072	56571.4143	-0.0200
F-8	112+61.1800	-2.0208	5761.9794	0.0312	5762.0106	266911.5524	56577.0491	-0.0200
F-9	112+66.9300	-2.0208	5762.1409	0.0165	5762.1574	266912.6976	56582.6839	-0.0200
CL BRG A2	112+72.6800	-2.0208	5762.3140	0.0000	5762.3140	266913.8428	56588.3187	-0.0200

CL GIRDER 4

BENT LINE DESCRIPTION	STATION	OFFSET	TOP OF DECK ELEVATION	DEAD LOAD DEFLECTION	TOP OF DECK ELEV + DL	PROJECT COORDINATES NORTHING	PROJECT COORDINATES EASTING	ROADWAY CRS-SLP
CL BRG A1	112+15.1800	2.0208	5761.1033	0.0000	5761.1033	266898.4303	56532.7756	-0.0200
F-1	112+20.9300	2.0208	5761.1723	0.0165	5761.1888	266899.5755	56538.4104	-0.0200
F-2	112+26.6800	2.0208	5761.2530	0.0312	5761.2842	266900.7207	56544.0452	-0.0200
F-3	112+32.4300	2.0208	5761.3451	0.0428	5761.3879	266901.8659	56549.6800	-0.0200
F-4	112+38.1800	2.0208	5761.4489	0.0501	5761.4989	266903.0111	56555.3148	-0.0200
F-5	112+43.9300	2.0208	5761.5642	0.0526	5761.6167	266904.1562	56560.9496	-0.0200
F-6	112+49.6800	2.0208	5761.6910	0.0501	5761.7411	266905.3014	56566.5844	-0.0200
F-7	112+55.4300	2.0208	5761.8294	0.0428	5761.8722	266906.4466	56572.2192	-0.0200
F-8	112+61.1800	2.0208	5761.9794	0.0312	5762.0106	266907.5918	56577.8540	-0.0200
F-9	112+66.9300	2.0208	5762.1409	0.0165	5762.1574	266908.7370	56583.4889	-0.0200
CL BRG A2	112+72.6800	2.0208	5762.3140	0.0000	5762.3140	266909.8822	56589.1237	-0.0200

CL GIRDER 5

BENT LINE DESCRIPTION	STATION	OFFSET	TOP OF DECK ELEVATION	DEAD LOAD DEFLECTION	TOP OF DECK ELEV + DL	PROJECT COORDINATES NORTHING	PROJECT COORDINATES EASTING	ROADWAY CRS-SLP
CL BRG A1	112+15.1800	6.0625	5761.0224	0.0000	5761.0224	266894.4696	56533.5805	-0.0200
F-1	112+20.9300	6.0625	5761.0915	0.0200	5761.1115	266895.6148	56539.2154	-0.0200
F-2	112+26.6800	6.0625	5761.1721	0.0379	5761.2100	266896.7600	56544.8502	-0.0200
F-3	112+32.4300	6.0625	5761.2643	0.0518	5761.3161	266897.9051	56550.4850	-0.0200
F-4	112+38.1800	6.0625	5761.3680	0.0607	5761.4287	266899.0503	56556.1198	-0.0200
F-5	112+43.9300	6.0625	5761.4833	0.0638	5761.5471	266900.1955	56561.7546	-0.0200
F-6	112+49.6800	6.0625	5761.6102	0.0607	5761.6709	266901.3407	56567.3894	-0.0200
F-7	112+55.4300	6.0625	5761.7486	0.0518	5761.8004	266902.4859	56573.0242	-0.0200
F-8	112+61.1800	6.0625	5761.8985	0.0379	5761.9364	266903.6311	56578.6590	-0.0200
F-9	112+66.9300	6.0625	5762.0601	0.0200	5762.0801	266904.7763	56584.2938	-0.0200
CL BRG A2	112+72.6800	6.0625	5762.2331	0.0000	5762.2331	266905.9214	56589.9286	-0.0200

CL GIRDER 6

BENT LINE DESCRIPTION	STATION	OFFSET	TOP OF DECK ELEVATION	DEAD LOAD DEFLECTION	TOP OF DECK ELEV + DL	PROJECT COORDINATES NORTHING	PROJECT COORDINATES EASTING	ROADWAY CRS-SLP
CL BRG A1	112+15.1800	10.1042	5760.9416	0.0000	5760.9416	266890.5089	56534.3855	-0.0200
F-1	112+20.9300	10.1042	5761.0107	0.0200	5761.0307	266891.6540	56540.0203	-0.0200
F-2	112+26.6800	10.1042	5761.0913	0.0379	5761.1292	266892.7992	56545.6551	-0.0200
F-3	112+32.4300	10.1042	5761.1835	0.0518	5761.2353	266893.9444	56551.2899	-0.0200
F-4	112+38.1800	10.1042	5761.2872	0.0607	5761.3479	266895.0896	56556.9247	-0.0200
F-5	112+43.9300	10.1042	5761.4025	0.0638	5761.4662	266896.2348	56562.5595	-0.0200
F-6	112+49.6800	10.1042	5761.5293	0.0607	5761.5900	266897.3800	56568.1943	-0.0200
F-7	112+55.4300	10.1042	5761.6677	0.0518	5761.7196	266898.5252	56573.8291	-0.0200
F-8	112+61.1800	10.1042	5761.8177	0.0379	5761.8556	266899.6703	56579.4640	-0.0200
F-9	112+66.9300	10.1042	5761.9792	0.0200	5761.9992	266900.8155	56585.0988	-0.0200
CL BRG A2	112+72.6800	10.1042	5762.1523	0.0000	5762.1523	266901.9607	56590.7336	-0.0200

LEGEND:

NOTES:

1. POSITIVE ROADWAY CROSS-SLOPE IS UPWARDS FROM PROFILE GRADE.
2. STATIONS, COORDINATES, OFFSETS, AND LENGTHS DEFINE THE STRUCTURE IN A TWO DIMENSIONAL HORIZONTAL PLANE. ELEVATIONS DEFINE THE FINAL GRADE OF THE FINISHED CONCRETE DECK UNLESS NOTED OTHERWISE. FABRICATION OF STRUCTURAL COMPONENTS THROUGH THE DIRECT USE OF THIS INFORMATION IS NOT INTENDED OR ADVISABLE.
3. TOP OF DECK ELEVATIONS ARE 3 INCHES BELOW FINISHED GRADE.
4. FOR DECK LOAD DEFLECTION DATA, SEE PRECAST CONCRETE BOX SHEET(S).
5. FOR ALIGNMENT AND CROSS-SLOPE DATA, SEE GENERAL LAYOUT SHEET(S).

LEFT EDGE OF SLAB

BENT LINE DESCRIPTION	STATION	OFFSET	TOP OF DECK ELEVATION	TOP OF DECK ELEV + DL	PROJECT COORDINATES NORTHING	PROJECT COORDINATES EASTING	ROADWAY CRS-SLP
BF AS1	111+99.9300	-13.2500	5760.7515		266910.3580	56514.7897	-0.0200
F-1	112+03.4300	-13.2500	5760.7735		266911.0550	56518.2196	-0.0200
F-2	112+06.9300	-13.2500	5760.7998		266911.7521	56521.6495	-0.0200
F-3	112+10.4300	-13.2500	5760.8303		266912.4492	56525.0794	-0.0200
BF A1	112+13.9300	-13.2500	5760.8652		266913.1462	56528.5093	-0.0200
CL BRG A1	112+15.1800	-13.2500	5760.8787	5760.8787	266913.3952	56529.7342	-0.0200
F-1	112+20.9300	-13.2500	5760.9478	5760.9678	266914.5404	56535.3690	-0.0200
F-2	112+26.6800	-13.2500	5761.0284	5761.0662	266915.6856	56541.0038	-0.0200
F-3	112+32.4300	-13.2500	5761.1205	5761.1724	266916.8307	56546.6386	-0.0200
F-4	112+38.1800	-13.2500	5761.2243	5761.2850	266917.9759	56552.2734	-0.0200
F-5	112+43.9300	-13.2500	5761.3396	5761.4033	266919.1211	56557.9083	-0.0200
F-6	112+49.6800	-13.2500	5761.4664	5761.5271	266920.2663	56563.5431	-0.0200
F-7	112+55.4300	-13.2500	5761.6048	5761.6567	266921.4115	56569.1779	-0.0200
F-8	112+61.1800	-13.2500	5761.7548	5761.7926	266922.5567	56574.8127	-0.0200
F-9	112+66.9300	-13.2500	5761.9163	5761.9363	266923.7019	56580.4475	-0.0200
CL BRG A2	112+72.6800	-13.2500	5762.0894	5762.0894	266924.8470	56586.0823	-0.0200
BF A2	112+73.9300	-13.2500	5762.1285		266925.0960	56587.3072	-0.0200
F-1	112+77.4300	-13.2500	5762.2411		266925.7931	56590.7371	-0.0200
F-2	112+80.9300	-13.2500	5762.3579		266926.4901	56594.1670	-0.0200
F-3	112+84.4300	-13.2500	5762.4790		266927.1872	56597.5969	-0.0200
BF AS2	112+87.9300	-13.2500	5762.6044		266927.8843	56601.0268	-0.0200

LEFT CURB FLOWLINE

BENT LINE DESCRIPTION	STATION	OFFSET	TOP OF DECK ELEVATION	TOP OF DECK ELEV + DL	PROJECT COORDINATES NORTHING	PROJECT COORDINATES EASTING	ROADWAY CRS-SLP
BF AS1	111+99.9300	-12.0000	5760.7765		266909.1330	56515.0387	-0.0200
F-1	112+03.4300	-12.0000	5760.7985		266909.8301	56518.4686	-0.0200
F-2	112+06.9300	-12.0000	5760.8248		266910.5271	56521.8984	-0.0200
F-3	112+10.4300	-12.0000	5760.8553		266911.2242	56525.3283	-0.0200
BF A1	112+13.9300	-12.0000	5760.8902		266911.9213	56528.7582	-0.0200
CL BRG A1	112+15.1800	-12.0000	5760.9037	5760.9037	266912.1702	56529.9832	-0.0200
F-1	112+20.9300	-12.0000	5760.9728	5760.9928	266913.3154	56535.6180	-0.0200
F-2	112+26.6800	-12.0000	5761.0534	5761.0912	266914.4606	56541.2528	-0.0200
F-3	112+32.4300	-12.0000	5761.1455	5761.1974	266915.6058	56546.8876	-0.0200
F-4	112+38.1800	-12.0000	5761.2493	5761.3100	266916.7510	56552.5224	-0.0200
F-5	112+43.9300	-12.0000	5761.3646	5761.4283	266917.8962	56558.1572	-0.0200
F-6	112+49.6800	-12.0000	5761.4914	5761.5521	266919.0413	56563.7920	-0.0200
F-7	112+55.4300	-12.0000	5761.6298	5761.6817	266920.1865	56569.4268	-0.0200
F-8	112+61.1800	-12.0000	5761.7798	5761.8176	266921.3317	56575.0616	-0.0200
F-9	112+66.9300	-12.0000	5761.9413	5761.9613	266922.4769	56580.6964	-0.0200
CL BRG A2	112+72.6800	-12.0000	5762.1144	5762.1144	266923.6221	56586.3312	-0.0200
BF A2	112+73.9300	-12.0000	5762.1535		266923.8710	56587.5562	-0.0200
F-1	112+77.4300	-12.0000	5762.2661		266924.5681	56590.9861	-0.0200
F-2	112+80.9300	-12.0000	5762.3829		266925.2652	56594.4160	-0.0200
F-3	112+84.4300	-12.0000	5762.5040		266925.9622	56597.8458	-0.0200
BF AS2	112+87.9300	-12.0000	5762.6294		266926.6593	56601.2757	-0.0200

RIGHT CURB FLOWLINE

BENT LINE DESCRIPTION	STATION	OFFSET	TOP OF DECK ELEVATION	TOP OF DECK ELEV + DL	PROJECT COORDINATES NORTHING	PROJECT COORDINATES EASTING	ROADWAY CRS-SLP
BF AS1	111+99.9300	12.0000	5760.7765		266885.6138	56519.8186	-0.0200
F-1	112+03.4300	12.0000	5760.7985		266886.3109	56523.2485	-0.0200
F-2	112+06.9300	12.0000	5760.8248		266887.0079	56526.6783	-0.0200
F-3	112+10.4300	12.0000	5760.8553		266887.7050	56530.1082	-0.0200
BF A1	112+13.9300	12.0000	5760.8902		266888.4021	56533.5381	-0.0200
CL BRG A1	112+15.1800	12.0000	5760.9037	5760.9037	266888.6510	56534.7631	-0.0200
F-1	112+20.9300	12.0000	5760.9728	5760.9928	266889.7962	56540.3979	-0.0200
F-2	112+26.6800	12.0000	5761.0534	5761.0912	266890.9414	56546.0327	-0.0200
F-3	112+32.4300	12.0000	5761.1455	5761.1974	266892.0866	56551.6675	-0.0200
F-4	112+38.1800	12.0000	5761.2493	5761.3100	266893.2318	56557.3023	-0.0200
F-5	112+43.9300	12.0000	5761.3646	5761.4283	266894.3770	56562.9371	-0.0200
F-6	112+49.6800	12.0000	5761.4914	5761.5521	266895.5221	56568.5719	-0.0200
F-7	112+55.4300	12.0000	5761.6298	5761.6817	266896.6673	56574.2067	-0.0200
F-8	112+61.1800	12.0000	5761.7798	5761.8176	266897.8125	56579.8415	-0.0200
F-9	112+66.9300	12.0000	5761.9413	5761.9613	266898.9577	56585.4763	-0.0200
CL BRG A2	112+72.6800	12.0000	5762.1144	5762.1144	266900.1029	56591.1111	-0.0200
BF A2	112+73.9300	12.0000	5762.1535		266900.3518	56592.3361	-0.0200
F-1	112+77.4300	12.0000	5762.2661		266901.0489	56595.7660	-0.0200
F-2	112+80.9300	12.0000	5762.3829		266901.7460	56599.1959	-0.0200
F-3	112+84.4300	12.0000	5762.5040		266902.4430	56602.6257	-0.0200
BF AS2	112+87.9300	12.0000	5762.6294		266903.1401	56606.0556	-0.0200

RIGHT EDGE OF SLAB

BENT LINE DESCRIPTION	STATION	OFFSET	TOP OF DECK ELEVATION	TOP OF DECK ELEV + DL	PROJECT COORDINATES NORTHING	PROJECT COORDINATES EASTING	ROADWAY CRS-SLP
BF AS1	111+99.9300	13.2500	5760.7515		266884.3889	56520.0675	-0.0200
F-1	112+03.4300	13.2500	5760.7735		266885.0859	56523.4974	-0.0200
F-2	112+06.9300	13.2500	5760.7998		266885.7830	56526.9273	-0.0200
F-3	112+10.4300	13.2500	5760.8303		266886.4801	56530.3572	-0.0200
BF A1	112+13.9300	13.2500	5760.8652		266887.1771	56533.7871	-0.0200
CL BRG A1	112+15.1800	13.2500	5760.8787	5760.8787	266887.4261	56535.0120	-0.0200
F-1	112+20.9300	13.2500	5760.9478	5760.9678	266888.5713	56540.6468	-0.0200
F-2	112+26.6800	13.2500	5761.0284	5761.0662	266889.7165	56546.2816	-0.0200
F-3	112+32.4300	13.2500	5761.1205	5761.1724	266890.8616	56551.9164	-0.0200
F-4	112+38.1800	13.2500	5761.2243	5761.2850	266892.0068	56557.5513	-0.0200
F-5	112+43.9300	13.2500	5761.3396	5761.4033	266893.1520	56563.1861	-0.0200
F-6	112+49.6800	13.2500	5761.4664	5761.5271	266894.2972	56568.8209	-0.0200
F-7	112+55.4300	13.2500	5761.6048	5761.6567	266895.4424	56574.4557	-0.0200
F-8	112+61.1800	13.2500	5761.7548	5761.7926	266896.5876	56580.0905	-0.0200
F-9	112+66.9300	13.2500	5761.9163	5761.9363	266897.7327	56585.7253	-0.0200
CL BRG A2	112+72.6800	13.2500	5762.0894	5762.0894	266898.8779	56591.3601	-0.0200
BF A2	112+73.9300	13.2500	5762.1285		266899.1269	56592.5851	-0.0200
F-1	112+77.4300	13.2500	5762.2411		266899.8240	56596.0149	-0.0200
F-2	112+80.9300	13.2500	5762.3579		266900.5210	56599.4448	-0.0200
F-3	112+84.4300	13.2500	5762.4790		266901.2181	56602.8747	-0.0200
BF AS2	112+87.9300	13.2500	5762.6044		266901.9152	56606.3046	-0.0200

NOTES:

1. FOR NOTES AND LEGEND, SEE SHEET 1.

mike.doyle 6:08:21 PM pw:\\DCPWAPP1.bkr.mbakercorp.com:pwprod\Documents\Projects\Lakewood_Office\Boulder_County_Emergency_Transportation\T04\08_Sheet_Files\06_Structures\DGN\Bridges\138200_BRDG_38.dgn

100% SET

CALL UTILITY NOTIFICATION CENTER OF COLORADO
811
CALL 2-BUSINESS DAYS IN ADVANCE BEFORE YOU DIG, GRADE, OR EXCAVATE FOR THE MARKING OF UNDERGROUND MEMBER UTILITIES

REVISIONS: NO.	DATE	REVISION DESCRIPTION:

Boulder County

Michael Baker INTERNATIONAL

BOULDER COUNTY TRANSPORTATION DEPARTMENT
ENGINEERING DIVISION

DESIGNED:	CAD:	CHECKED:	DATE:
SPO	BMT		11/4/2016

LEE HILL APPROACH BRIDGE
BRIDGE DECK ELEVATIONS (2 OF 2)

PROJECT NO: 4012.SEPT12C39 | SHEET NO: 132

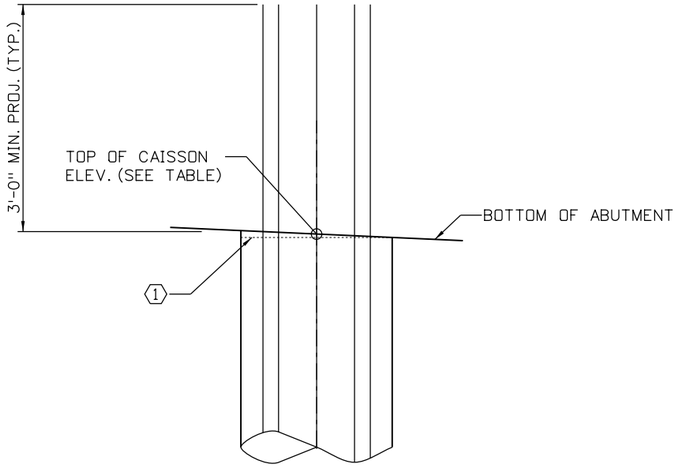

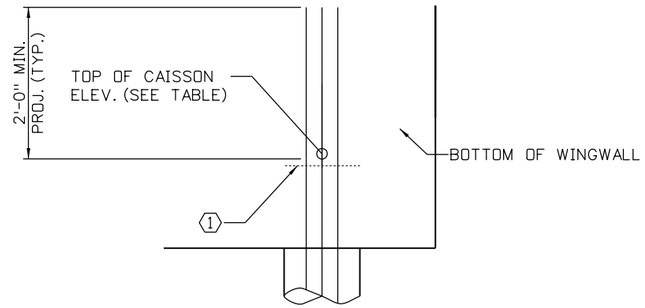

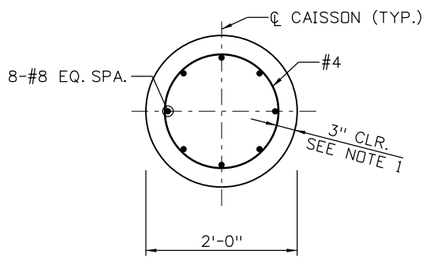

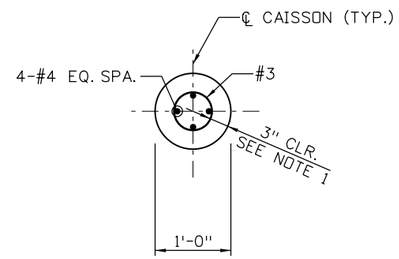

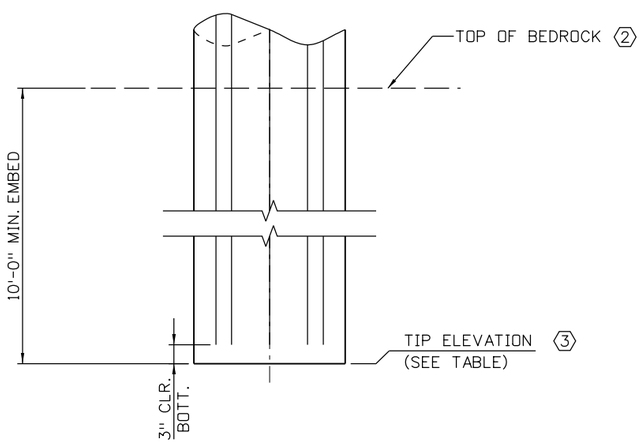

TYPICAL ABUTMENT CAISSON DETAIL

SHOWN ALONG F.F. ABUTMENT
SCALE:

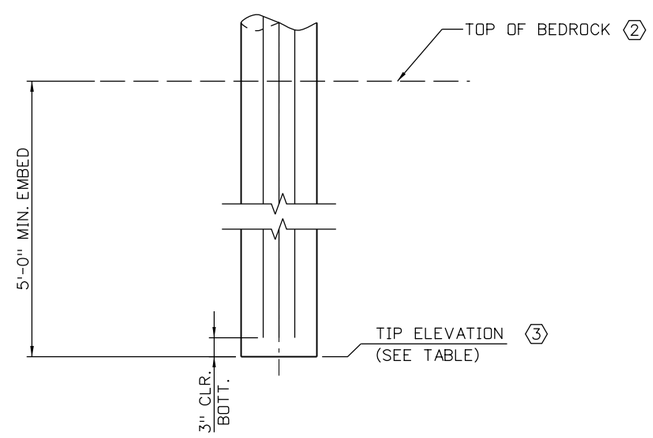

TYPICAL WINGWALL CAISSON DETAIL

SHOWN ALONG F.F. WINGWALL
SCALE:

NOTES:

1. DRILLED CAISSON CONCRETE SHALL BE CONCRETE CLASS BZ.

KEYNOTES:

1. TOP OF CAISSON MAY BE PLACED LEVEL FROM THE LOW SIDE OF THE CAISSON BASED ON THE ABUTMENT CROSS SLOPE. TOP OF CAISSON ELEVATION PROVIDED IS AT THE ℄ CAISSON.

2. A GEOTECHNICAL ENGINEER OR REPRESENTATIVE SHOULD BE PRESENT TO VALIDATE THE TOP OF BEDROCK ELEVATION AND SUBSURFACE CONDITIONS.

3. THE CONTRACTOR SHOULD BE PREPARED TO PROVIDE A REINFORMENT SPLICE AND CAISSON EXTENTION IN ACCORDANCE WITH SECTION 503.

   ABUTMENT:
   4-#8 LONGITUDINAL SPLICE LENGTH 3'-1" MINIMUM
   TIES SPACED AT 1'-0" MAXIMUM

   WINGWALL:
   4-#4 LONGITUDINAL SPLICE LENGTH 1'-3" MINIMUM
   TIES SPACED AT 1'-0" MAXIMUM

100% SET

CALL UTILITY NOTIFICATION CENTER OF COLORADO
811
CALL 2-BUSINESS DAYS IN ADVANCE BEFORE YOU DIG, GRADE, OR EXCAVATE FOR THE MARKING OF UNDERGROUND MEMBER UTILITIES

REVISIONS:	NO.	DATE	REVISION DESCRIPTION:

Boulder County
Michael Baker INTERNATIONAL

BOULDER COUNTY TRANSPORTATION DEPARTMENT
ENGINEERING DIVISION

DESIGNED:	CAD:	CHECKED:	DATE:
MCD	BMT		11/4/2016

WAGONWHEEL GAP ROAD BRIDGES
CAISSON DETAILS
(1 OF 2)

PROJECT NO: 4043.SEPT12C34 | SHEET NO: 133

mike.doyle 6:08:39 PM pw:\\DCPWAPP1.bkr.mbakercorp.com:pwprod\Documents\Projects\Lakewood_Office\Boulder_County_Emergency_Transportation\T04\08_Sheet_Files\06_Structures\DGN\Bridges\138200_BRDG_39.dgn

CAISSON DATA TABLE

BRIDGE	CAISSON	TOP OF CAISSON ELEV.	AS-BUILT TIP ELEVATION
BOW MOUNTAIN	A1-1	5965.00	
	A1-2	5965.31	
	A1-3	5965.63	
	A1-4	5965.94	
	A2-1	5965.06	
	A2-2	5965.37	
	A2-3	5965.69	
	A2-4	5966.00	
	A-1	5964.75	
	A-2	5964.75	
	A-3	5969.25	
	A-4	5969.25	
	B-1	5966.19	
	B-2	5966.19	
	B-3	5970.69	
	B-4	5970.69	
	C-1	5964.81	
	C-2	5964.81	
	C-3	5964.81	
	C-4	5964.81	
	C-5	5969.31	
	C-6	5969.31	
	C-7	5969.31	
	D-1	5966.26	
	D-2	5966.26	
	D-3	5966.26	
	D-4	5966.26	
	D-5	5970.76	
	D-6	5970.76	
	D-7	5970.76	
LEE HILL APPROACH	A1-1	5752.67	
	A1-2	5752.67	
	A1-3	5752.67	
	A1-4	5752.67	
	A2-1	5753.83	
	A2-2	5753.83	
	A2-3	5753.83	
	A2-4	5753.83	

CAISSON SUMMARY TABLE

BRIDGE	LOCATION	PER CAISSON		
		MAXIMUM SERVICE LOAD (KIPS)	MAXIMUM STRENGTH LOAD (KIPS)	MAXIMUM EXTREME EVENT LOAD (KIPS)
BOW MOUNTAIN	ABUTMENT 1	121	167	109
	ABUTMENT 2	134	182	128
	WINGWALL A	194	253	142
	WINGWALL B	194	253	142
	WINGWALL C	194	253	142
	WINGWALL D	194	253	142
LEE HILL APPROACH	ABUTMENT 1	140	195	121
	ABUTMENT 2	140	195	121

NOTES:

1. DRILLED CAISSON CONCRETE SHALL BE CONCRETE CLASS BZ.

100% SET

CALL UTILITY NOTIFICATION CENTER OF COLORADO
811
CALL 2-BUSINESS DAYS IN ADVANCE BEFORE YOU DIG, GRADE, OR EXCAVATE FOR THE MARKING OF UNDERGROUND MEMBER UTILITIES

REVISIONS:	NO.	DATE	REVISION DESCRIPTION:

Boulder County

Michael Baker INTERNATIONAL

BOULDER COUNTY TRANSPORTATION DEPARTMENT
ENGINEERING DIVISION

DESIGNED:	CAD:	CHECKED:	DATE:
MCD	BMT		11/4/2016

WAGONWHEEL GAP ROAD BRIDGES
CAISSON DETAILS (2 OF 2)

PROJECT NO: 4043.SEPT12C34 | SHEET NO: 134

mike.doyle 6:08:56 PM pw:\\DCPWAPP1.bkr.mbakercorp.com:pwprod\Documents\Projects\Lakewood_Office\Boulder_County_Emergency_Transportation\T04\08_Sheet_Files\06_Structures\DGN\Bridges\138200_BRDG_39A.dgn

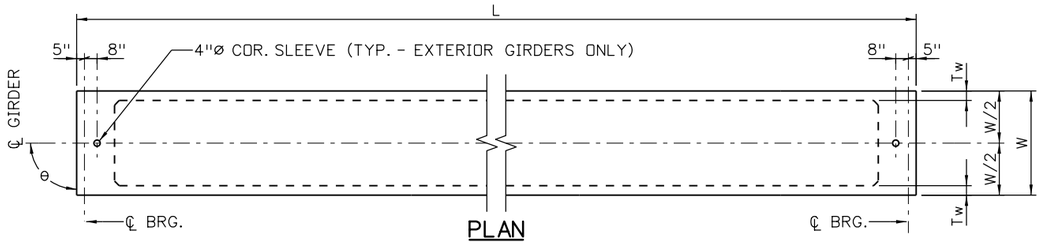

PLAN

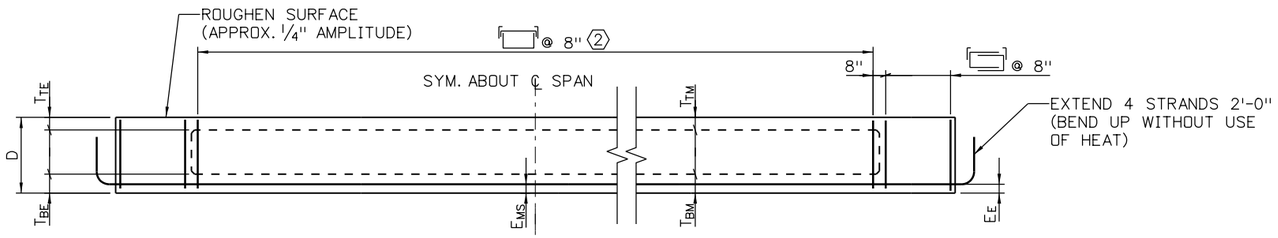

ELEVATION

PROJ. REINF. NOT SHOWN

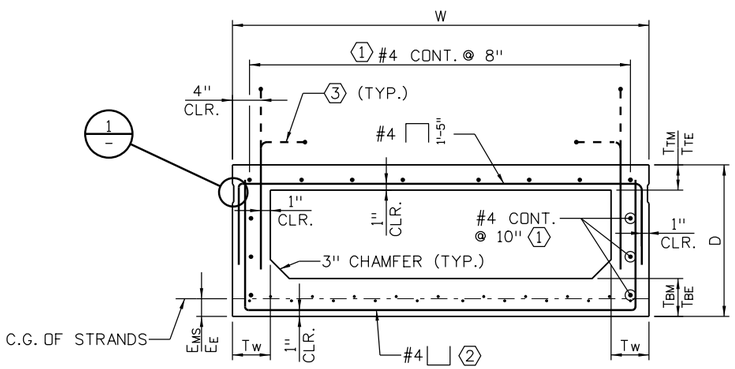

TYPICAL SECTION

EXTERIOR STRAND SHALL NOT BE DEBONDED AND SHOULD BE PLACED ADJACENT TO ANCHOR STIRRUPS

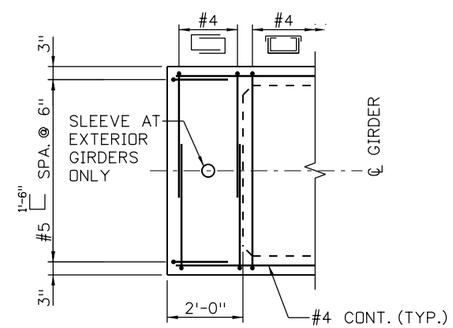

TYPICAL END PLAN

PROJ. REINF. NOT SHOWN

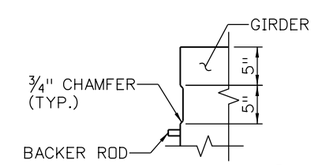

SHEAR KEY DETAIL 1

FILL KEY WITH NON-SHRINK GROUT

NOTES:

1. ALL WORK NECESSARY TO FABRICATE AND INSTALL THE INTEGRAL PARTS OF THE GIRDER (INCLUDING THE INTERMEDIATE DIAPHRAGMS, IF ANY, AND LEVELING PADS), AS SHOWN ON THE PLANS, SHALL BE INCLUDED IN THE BID PRICE FOR ITEM 618, PRESTRESSED CONCRETE BOX, WITH A PAY UNIT OF SQ. FT. MEASURED BY L x W.
2. WHEN APPROVED BY THE ENGINEER, A MINIMUM TACK WELDING WILL BE PERMITTED ON ASTM A706 UNCOATED REINFORCING STEEL.
3. REINFORCING PROJECTING FROM THE TOP OF THE GIRDER AND REINFORCING WITHIN 8'-0" OF AN EXPANSION DEVICE IN THE BRIDGE DECK SHALL BE EPOXY COATED. DAMAGED COATING ON GIRDER REINFORCING NEED NOT BE REPAIRED. THE MINIMUM COVER FOR REINFORCING STEEL IS 1".
4. WELDED WIRE FABRIC MAY BE USED WITH D20 WIRES IN LIEU OF THE #4 BARS SHOWN.
5. AT GIRDER ENDS NOT EMBEDDED IN CONCRETE DIAPHRAGMS, CUT STRANDS OFF 1" BELOW THE SURFACE OF THE CONCRETE AND FINISH WITH APPROVED EPOXY GROUT. AT GIRDER ENDS EMBEDDED IN CONCRETE DIAPHRAGMS, CUT STRANDS TO PROJECT 3", EXCEPT AS SHOWN. DO NOT MAKE COSMETIC REPAIRS WHEN DAMAGE IS LESS THAN 1½" DEEP TO THE PARTS OF THE GIRDERS EMBEDDED IN CONCRETE.
6. USE LOW RELAXATION STRANDS MEETING THE REQUIREMENTS OF ASTM A-416 GRADE 270. THE MINIMUM CLEAR DISTANCE BETWEEN GROUPS OR INDIVIDUAL STRANDS SHALL BE $2.3(d_s)$ BUT NOT LESS THAN 1¼". THE MINIMUM COVER FOR PRESTRESSING STEEL IS 1½".

   A_s* = MINIMUM AREA OF THE PRESTRESSING STEEL
   d_s = NOMINAL STRAND DIAMETER
   f'_s = ULTIMATE STRENGTH OF PRESTRESSING STEEL
   F_j = JACKING FORCER PER GIRDER
   F_f = FINAL FORCE PER GIRDER AFTER ALL LOSSES
   f'_{ci} = REQUIRED CONCRETE STRENGTH AT RELEASE OF PRESTRESS FORCE
   f'_c = REQUIRED CONCRETE STRENGTH AT 28 DAYS OF AGE
   L = LENGTH OF GIRDER ALONG THE GRADE OF THE GIRDER
   Δ = DEFLECTION AT ℄ OF SPAN DUE TO CAST-IN-PLACE SLAB, DIAPHRAGMS, ASPHALT, CURBS, RAILS, AND WALKS
   θ = BRIDGE SKEW ANGLE
7. CONCRETE SHALL BE CLASS PS.
8. ENTRAINED AIR IS NOT REQUIRED FOR GIRDER CONCRETE.
9. END BLOCKS SHALL BE USED ON ALL GIRDERS UNLESS OTHERWISE NOTED.
10. USE ½" CHAMFER ON ALL CORNERS, EXCEPT AS NOTED.
11. PREDICTED CAMBER IS THE CAMBER FOR THE GIRDER ALONE AT 90 DAYS. THE CONTRACTOR SHALL LIMIT THE CAMBER GROWTH TO A VALUE NOT TO EXCEED THE PREDICTED CAMBER PLUS 1" PRIOR TO THE DECK POUR BY WEIGHTING, SCHEDULING FABRICATION, POST TENSIONING, OR OTHER MEANS AND MUST REPORT TO THE ENGINEER VALUES OF CAMBER WHICH EXCEED THE PREDICTED CAMBER PLUS 1". REMEDIAL MEASURES, AS APPROVED BY THE ENGINEER, SHALL BE TAKEN IF THE PREDICTED CAMBER PLUS 1" IS EXCEEDED. THE APPROVED REMEDIAL MEASURES SHALL BE FREE OF ANY ADVERSE IMPACT. THE COSTS ASSOCIATED WITH ALL REMEDIAL MEASURES SHALL BE BORNE BY THE CONTRACTOR.
12. SIDE BY SIDE BOXES SHALL NOT HAVE CAMBERS OF ADJACENT BOXES DIFFER BY MORE THAN 1" BEFORE THE DECK POUR. PRIOR TO PLACING DECK REINFORCING, THE CONTRACTOR SHALL ADJUST THIS DIFFERENTIAL TO WITHIN THIS LIMIT BY SORTING THE BOXES TO MINIMIZE DIFFERENTIALS, OR BY PULLING THE HIGH BOXES DOWN AND LOW BOXES UP.
13. DEPTH (D) TOLERANCE SHALL BE +½", -¼".
14. THE CONTRACTOR IS RESPONSIBLE FOR DETERMINING NECESSARY BRACING REQUIREMENTS, AND FOR PROVIDING ADEQUATE BRACING FOR THE SPECIFIC WIND AND WEATHER CONDITIONS TO BE ENCOUNTERED FOR EACH SPECIFIC PROJECT.
15. ELASTOMERIC LEVELING PADS SHALL BE INCLUDED IN ITEM 618 PRESTRESSED CONCRETE BOX. SEE ABUTMENT SHEETS FOR DETAILS.

KEYNOTES:

1 LIGHTLY TENSIONED STRANDS MAY BE USED AS ALTERNATE.

2 #4 D=2" HOOK ORIENTATION IS AT THE CONTRACTOR'S OPTION (TYP.)
(BUNDLE WITH #4 FOR 14' AT EACH END OF GIRDER)

3 #3 3'-0" 2¼" (PROJECT 1'-2") SPA. WITH #4 STIRRUPS.
FIELD BEND OVER TOP MAT OF LONG. SLAB STEEL.
REPAIR DAMAGED EPOXY COATING.

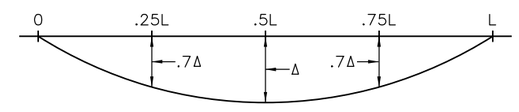

DEAD LOAD DEFLECTION DIAGRAM

SEE TABLE FOR VALUE OF Δ

100% SET

CALL UTILITY NOTIFICATION CENTER OF COLORADO
811
CALL 2-BUSINESS DAYS IN ADVANCE BEFORE YOU DIG, GRADE, OR EXCAVATE FOR THE MARKING OF UNDERGROUND MEMBER UTILITIES

REVISIONS:	NO.	DATE	REVISION DESCRIPTION:

BOULDER COUNTY TRANSPORTATION DEPARTMENT
ENGINEERING DIVISION
Michael Baker INTERNATIONAL

DESIGNED:	CAD:	CHECKED:	DATE:
SPO	BMT		11/4/2016

WAGONWHEEL GAP ROAD BRIDGES
PRESTRESSED CONCRETE BOX (1 OF 2)

PROJECT NO: 4043.SEPT12C34 | SHEET NO: 135

mike.doyle 6:09:12 PM pw:\\DCPWAPP1.bkr.mbakercorp.com:pwprod\Documents\Projects\Lakewood_Office\Boulder_County_Emergency_Transportation\T04\08_Sheet_Files\06_Structures\DGN\Bridges\138200_BRDG_40.dgn

GIRDER SCHEDULE																							
BRIDGE	GIRDER TYPE	GIRDER NO.	L (FEET)	W (INCH)	D (INCH)	Θ (DEG.)	T_w (INCH)	T_{BM} (INCH)	T_{TM} (INCH)	T_{BE} (INCH)	T_{TE} (INCH)	# STRANDS	A_s (SQ. IN.)	DEBONDED STRANDS (%)	E_{MS} (INCH)	E_E (INCH)	F_j (KIPS)	F_f (KIPS)	CONCRETE STRENGTH		Δ (INCH)	PREDICTED RELEASE CAMBER (INCH)	PREDICTED CAMBER (INCH)
																			f'_{ci} (PSI)	f'_c (PSI)			
BOW MOUNTAIN	BX20	G1, G5	43.59	56	20	90	6	6	4	6	4	13	2.821	0	2.50	2.50	571	513	6.4	8	-0.382	0.436	0.767
BOW MOUNTAIN	BX20	G2-4	43.59	56	20	90	6	6	4	6	4	13	2.821	0	2.50	2.50	571	509	6.4	8	-0.308	0.436	0.767
LEE HILL APPROACH	BX24	G1, G6	58.35	48	24	90	6	6	4	6	4	15	3.255	0	2.50	2.50	659	592	6.4	8	-0.765	0.696	1.213
LEE HILL APPROACH	BX24	G2-5	58.35	48	24	90	6	6	4	6	4	15	3.255	0	2.50	2.50	659	588	6.4	8	-0.631	0.696	1.213

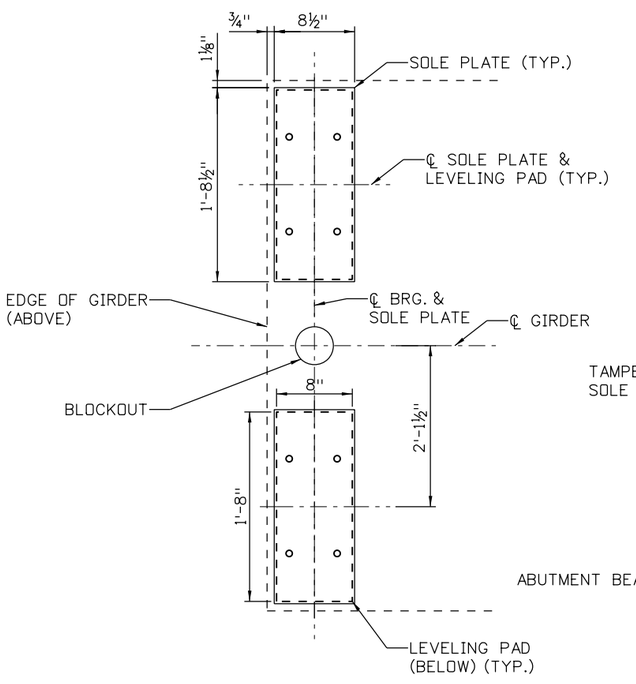

SECTION AT BOTTOM OF SOLE PLATE (A)
ABUT. 1 SHOWN, ABUT. 2 SIMILAR

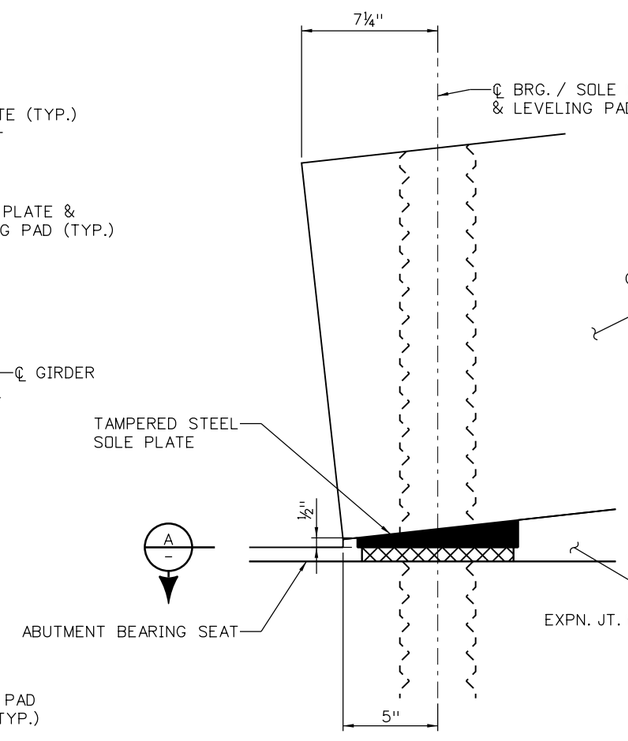

ABUTMENT 1 ELEVATION
ABUT. 2 SIMILAR

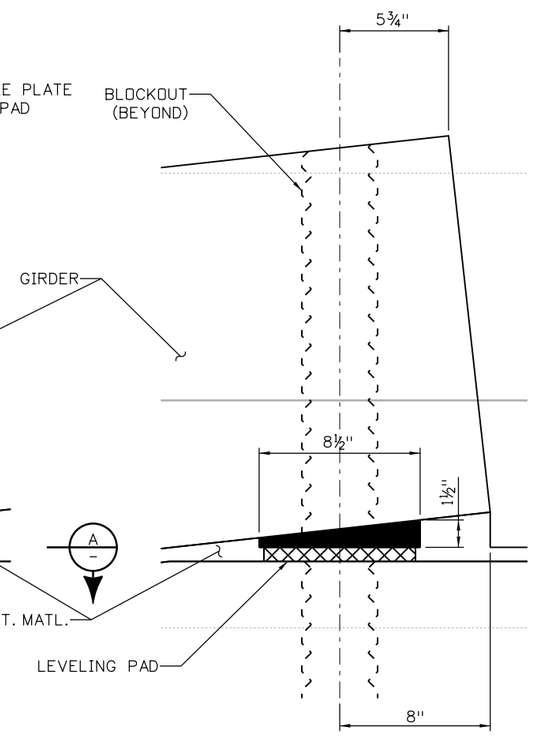

ABUTMENT 2 ELEVATION
ABUT. 1 SIMILAR

NOTES:

1. TAPERED SHIM PLATE SHALL BE AASHTO GRADE 36 STEEL.

KEYNOTES:

(1) BLOCKOUT SHALL BE VERTICAL AND PLUMB. LONGITUDINAL GRADE EFFECTS SHOWN. FOR TRANSVERSE SLOPES, SEE ABUTMENT SHEETS.

BOW MOUNTAIN BRIDGE SOLE PLATE AND GIRDER END DETAILS (1)

100% SET

CALL UTILITY NOTIFICATION CENTER OF COLORADO
811
CALL 2-BUSINESS DAYS IN ADVANCE BEFORE YOU DIG, GRADE, OR EXCAVATE FOR THE MARKING OF UNDERGROUND MEMBER UTILITIES

REVISIONS:	NO.	DATE	REVISION DESCRIPTION:

BOULDER COUNTY TRANSPORTATION DEPARTMENT
ENGINEERING DIVISION
Michael Baker INTERNATIONAL

DESIGNED:	CAD:	CHECKED:	DATE:
SPO	BMT		11/4/2016

WAGONWHEEL GAP ROAD BRIDGES
PRESTRESSED
CONCRETE BOX (2 OF 2)

PROJECT NO: 4043.SEPT12C34 | SHEET NO: 136

mike.doyle 6:09:28 PM pw:\\DCPWAPP1.bkr.mbakercorp.com:pwprod\Documents\Projects\Lakewood_Office\Boulder_County_Emergency_Transportation\T04\08_Sheet_Files\06_Structures\DGN\Bridges\138200_BRDG_41.dgn

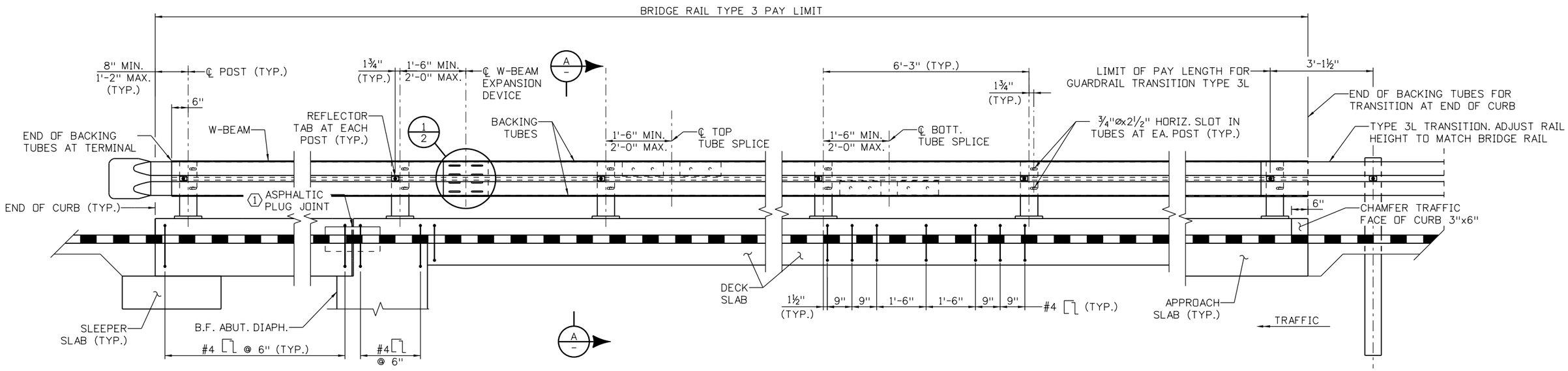

ELEVATION

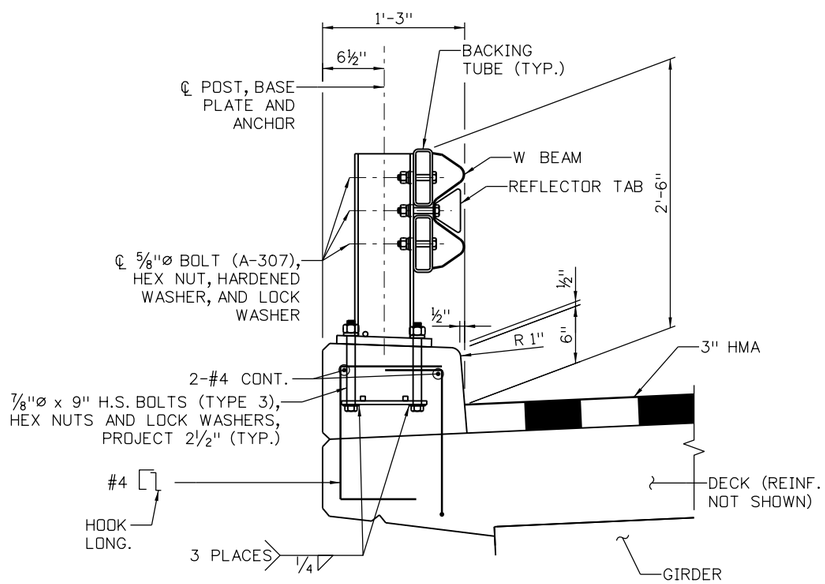

TYPICAL SECTION A –

NOTES:

1. ALL TUBES SHALL BE FABRICATED FROM ASTM A-500 GRADE B STEEL. ALL POSTS, BASE PLATES, AND ANCHOR BOLTS SHALL BE FABRICATED FROM ASTM A-36 STEEL. ALL SPLICES AND EXPANSION DEVICES FOR TUBES SHALL BE FABRICATED FROM ASTM A-572, GRADE 50 STEEL. THE ABOVE MATERIAL, W-BEAM, AND ALL ANCHOR BOLTS AND MISCELLANEOUS BOLTS, NUTS, AND WASHERS SHALL BE GALVANIZED AND POWDER COATED AFTER FABRICATION IN ACCORDANCE WITH SECTION 509 AND 606. CONCRETE, REINFORCING STEEL, AND STRUCTURAL STEEL ELEMENTS SHALL CONFORM TO THE REQUIREMENTS OF SECTIONS 601, 602, AND 509 RESPECTIVELY.

   STRUCTURAL STEEL:
   AASHTO M 183 (ASTM A 36) f_y = 36,000 psi
   ASTM A 223 (ASTM A 572) GRADE 50 f_y = 50,000 psi
   COLD FORMED ASTM A 500 GRADE B f_y = 46,000 psi

2. POST ANCHORS, ENCASED IN CONCRETE, SHALL BE ASTM A36 STEEL, AND NEED NOT BE GALVANIZED.

3. POSTS, POST ANCHORS, BASE PLATES, ANCHOR BOLTS, MISCELLANEOUS BOLTS, NUTS, WASHERS, TUBES, TUBE EXPANSION DEVICES, TUBE SPLICES, END PLATES, W-BEAM, W-BEAM EXPANSION DEVICES, CURB CONCRETE (CLASS D), AND CURB REINFORCING STEEL SHALL BE INCLUDED IN ITEM NO. 606 BRIDGE RAIL TYPE 3.

4. THE BACKING TUBES SHALL BE SHOP BENT OR FABRICATED TO FIT HORIZONTAL CURVE WHEN THE RADIUS IS LESS THAN 1,500 FEET.

5. TUBES SHALL BE CONTINUOUS OVER NO LESS THAN TWO POSTS. NO WELDED BUTT SPLICES WILL BE ALLOWED IN THE TUBE SECTIONS.

6. POSTS SHALL BE PERPENDICULAR TO THE LONGITUDINAL ROADWAY GRADE.

7. CONTRACTOR SHALL PROVIDE TERMINAL SECTION (FLARED) WHEN NO APPROACH GUARDRAIL IS USED WITH THE COST INCLUDED IN ITEM NO. 606 BRIDGE RAIL TYPE 3.

8. FOR ADDITIONAL DETAILS, SEE CDOT STANDARD PLAN NO. M-606-1.

9. PRIOR TO FABRICATION OF THIS ITEM, THREE SETS OF WORKING DRAWINGS WHICH COMPLY WITH THE REQUIREMENTS OF SECTION 105 SHALL BE SUBMITTED TO THE ENGINEER FOR INFORMATION ONLY.

10. TERMINAL AND TRANSITION INCLUDED WITH ROADWAY QUANTITIES.

KEYNOTES:

1. ADJUST REINFORCEMENT CLEAR OF JOINT.

INFORMATION ONLY

DESCRIPTION	UNIT	PER LIN. FT.
STRUCTURAL STEEL	LB.	45.4
CONCRETE CLASS D	CU. YD.	0.04
REINFORCING STEEL	LB.	4.8
BRIDGE RAIL TYPE 3 - W BEAM	LIN. FT.	1.0

100% SET

CALL UTILITY NOTIFICATION CENTER OF COLORADO
811
CALL 2-BUSINESS DAYS IN ADVANCE BEFORE YOU DIG, GRADE, OR EXCAVATE FOR THE MARKING OF UNDERGROUND MEMBER UTILITIES

REVISIONS: NO.	DATE	REVISION DESCRIPTION:

Boulder County
Michael Baker INTERNATIONAL

BOULDER COUNTY TRANSPORTATION DEPARTMENT
ENGINEERING DIVISION

DESIGNED:	CAD:	CHECKED:	DATE:
SPO	BMT		11/4/2016

WAGONWHEEL GAP ROAD BRIDGES
BRIDGE RAIL TYPE 3
(1 OF 2)

PROJECT NO: 4043.SEPT12C34 | SHEET NO: 137

mike.doyle 6:09:45 PM pw:\\DCPWAPP1.bkr.mbakercorp.com:pwprod\Documents\Projects\Lakewood_Office\Boulder_County_Emergency_Transportation\T04\08_Sheet_Files\06_Structures\DGN\Bridges\138200_BRDG_42.dgn

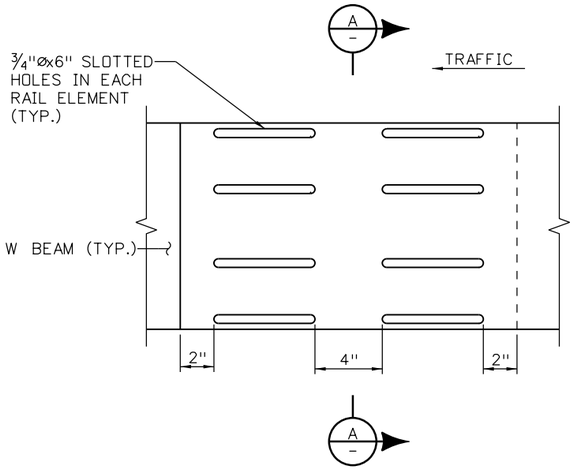

W-BEAM EXPANSION DEVICE DETAIL (1/B20)

SPLICE BOLTS NOT SHOWN

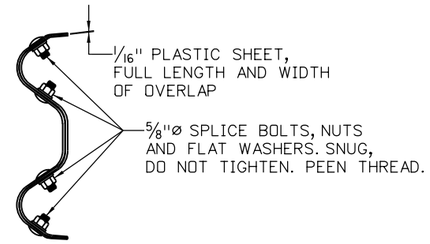

SECTION (A/–)

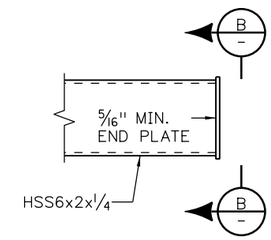

BACKING TUBE DETAIL

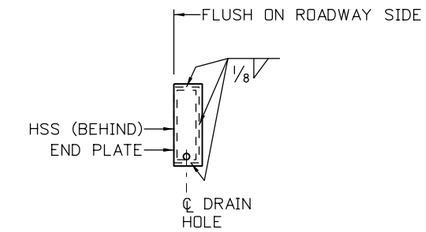

VIEW (B/–)

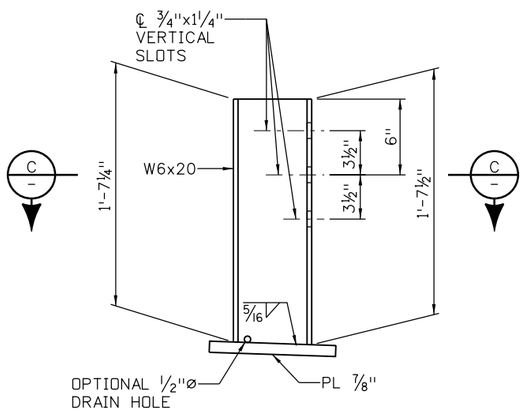

POST DETAIL

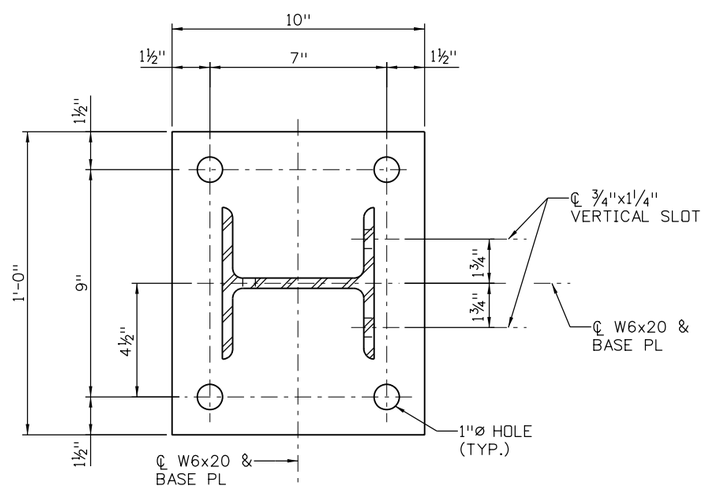

SECTION (C/–)

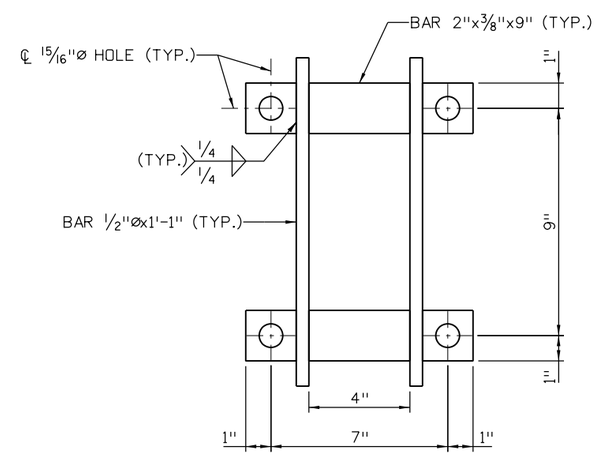

ANCHOR DETAIL

100% SET

CALL UTILITY NOTIFICATION CENTER OF COLORADO
811
CALL 2-BUSINESS DAYS IN ADVANCE BEFORE YOU DIG, GRADE, OR EXCAVATE FOR THE MARKING OF UNDERGROUND MEMBER UTILITIES

REVISIONS:	NO.	DATE	REVISION DESCRIPTION:

Boulder County

Michael Baker INTERNATIONAL

BOULDER COUNTY TRANSPORTATION DEPARTMENT
ENGINEERING DIVISION

DESIGNED:	CAD:	CHECKED:	DATE:
SPO	BMT		11/4/2016

WAGONWHEEL GAP ROAD BRIDGES
BRIDGE RAIL TYPE 3
(2 OF 2)

PROJECT NO: 4043.SEPT12C34 | SHEET NO: 138

mike.doyle 6:10:01 PM pw:\\DCPWAPP1.bkr.mbakercorp.com:pwprod\Documents\Projects\Lakewood_Office\Boulder_County_Emergency_Transportation\T04\08_Sheet_Files\06_Structures\DGN\Bridges\138200_BRDG_43.dgn

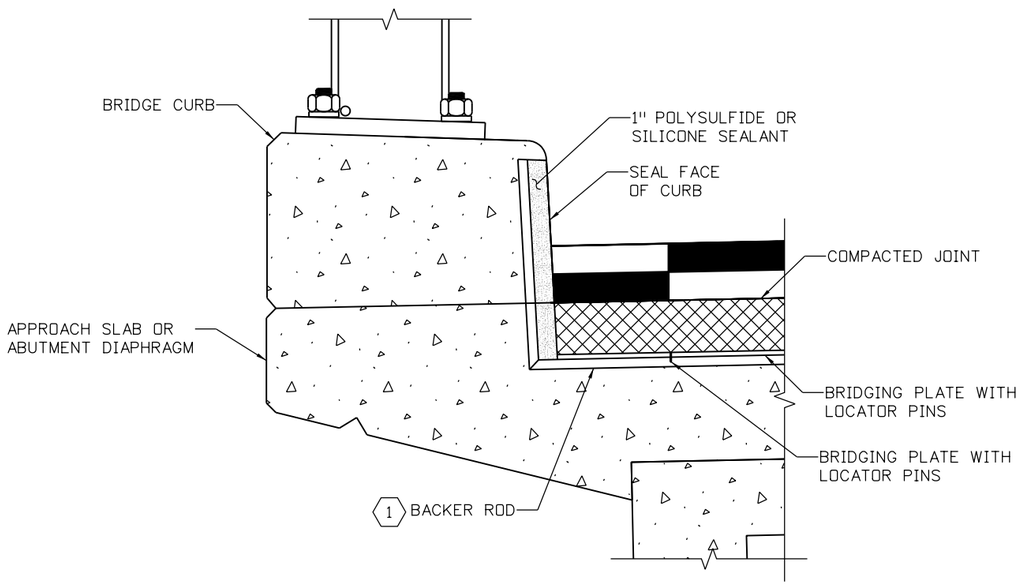

SECTION THROUGH CURB

TAKEN ALONG ℄ EXPANSION DEVICE

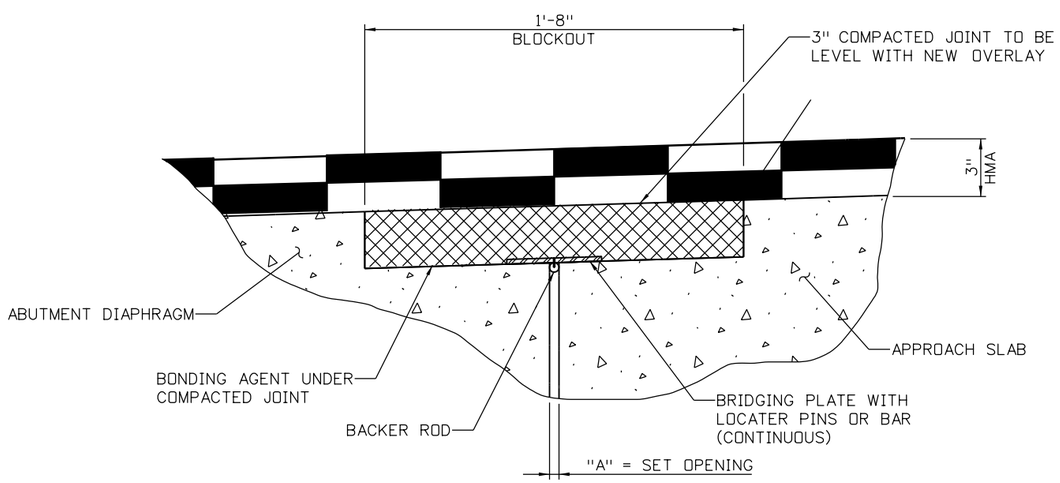

EXPANSION JOINT DETAIL

BRIDGING PLATE SIZE

THICKNESS	WIDTH	MINIMUM WIDTH
1/4"	5"	4'-0"

NOTES

1. THE PAY ITEM NO. 518, BRIDGE EXPANSION JOINT, SHALL INCLUDE ALL LABOR AND MATERIALS REQUIRED TO INSTALL THE EXPANSION JOINT ACCORDING TO THE MANUFACTURER'S DIRECTIONS AND ACCORDING TO THESE PLANS.
2. THE BLOCKOUT SHALL BE FORMED TO FULL DEPTH AND GROUND TO PROVIDE A UNIFORM BEARING SURFACE FOR THE BRIDGING PLATE.
3. BRIDGING PLATES SHALL NOT ROCK ON THEIR SUPPORTS PRIOR TO PLACING THE PLUG JOINT MATERIAL.
4. THE BRIDGING PLATE SHALL BE A-36 STEEL OR EQUIVALENT APPROVED BY THE ENGINEER. IT SHALL BE INSTALLED IN ACCORDANCE WITH THE MANUFACTURER'S DIRECTIONS. ALL BRIDGING PLATES SHALL HAVE LOCATOR PINS FOR CENTRALIZERS.
5. THE BACKER ROD SHALL BE SECURED AND SEALED ACCORDING TO THE MANUFACTURER'S DIRECTIONS.
6. THE JOINT BONDING AGENT SHALL BE THE TYPE RECOMMENDED BY THE MANUFACTURER FOR THE EXPANSION JOINT BEING INSTALLED. IT SHALL BE APPLIED ACCORDING TO THE MANUFACTURER'S RECOMMENDATIONS.
7. ALL SURFACES IN JOINT OPENING SHALL BE CLEANED ACCORDING TO THE MANUFACTURER'S DIRECTIONS.
8. THE JOINTS SHALL BE INSTALLED AND COMPACTED ACCORDING TO THE MANUFACTURER'S PROCEDURES. THE FINISHED JOINT, AFTER COMPACTING AND SEALING, SHALL BE FLUSH WITH THE TOP OF ADJACENT CONCRETE AND WEARING SURFACE
9. A REPRESENTATIVE OF THE MANUFACTURER SHALL BE ON SITE PRIOR TO AND DURING INSTALLATION OF THE PLUG JOINTS AND SHALL APPROVE THE METHODS AND MATERIALS BEFORE WORK COMMENCES.
10. THE ASPHALTIC BINDER SHALL NOT BE OVERHEATED, EITHER BY ABSOLUTE TEMPERATURES LIMITS OF THE MATERIAL, OR BY EXTENDED TIME AT A LOWER HIGH TEMPERATURE. MATERIAL THAT IS OVERHEATED SHALL BE DISCARDED.
11. FOR CONSTRUCTION REQUIREMENTS, SEE SECTION 518.08 OF STANDARD SPECIFICATIONS.
12. SEAL TOP OF CURB AS DIRECTED BY THE ENGINEER.
13. SEALING THE FACE OF THE CURB WILL NOT BE PAID FOR SEPERATELY, BUT WILL BE INCLUDED IN THE WORK.
14. FOR INFORMATION ONLY: IT IS ESTIMATED THAT 20 CU. FT. OF COMPACTED JOINT MATERIAL IS REQUIRED FOR EACH JOINT.

KEYNOTES

1. WILSEAL OR SEALMATE SHALL BE USED FOR 2'-0" FROM THE GUTTER LINE.

ACCEPTABLE EXPANSION DEVICE ALTERNATIVES

ALL ASPHALTIC PLUG JOINT MATERIALS NEED A CERTIFIED TEST REPORT FROM AN INDEPENDENT LABORATORY SHOWING PASSING TEST RESULTS ON ALL REFERENCED TESTS WITHIN THE MOST RECENT ASTM D 6297 FOR EACH LOT OF MATERIAL TO BE INCLUDED ON THE CDOT APPROVED PRODUCTS LIST AT HTTP://WWW.DOT.STATE.CO.US/APP_APL/

mike.doyle 6:10:17 PM pw:\\DCPWAPP1.bkr.mbakercorp.com:pwprod\Documents\Projects\Lakewood_Office\Boulder_County_Emergency_Transportation\T04\08_Sheet_Files\06_Structures\DGN\Bridges\138200_BRDG_44.dgn

100% SET

CALL UTILITY NOTIFICATION CENTER OF COLORADO
811
CALL 2-BUSINESS DAYS IN ADVANCE BEFORE YOU DIG, GRADE, OR EXCAVATE FOR THE MARKING OF UNDERGROUND MEMBER UTILITIES

REVISIONS: NO.	DATE	REVISION DESCRIPTION:

Boulder County

Michael Baker INTERNATIONAL

BOULDER COUNTY TRANSPORTATION DEPARTMENT
ENGINEERING DIVISION

DESIGNED:	CAD:	CHECKED:	DATE:
SPO	BMT		11/4/2016

WAGONWHEEL GAP ROAD BRIDGES
BRIDGE EXPANSION DEVICE
ASPHALTIC PLUG JOINT

PROJECT NO: 4043.SEPT12C34 | SHEET NO: 139

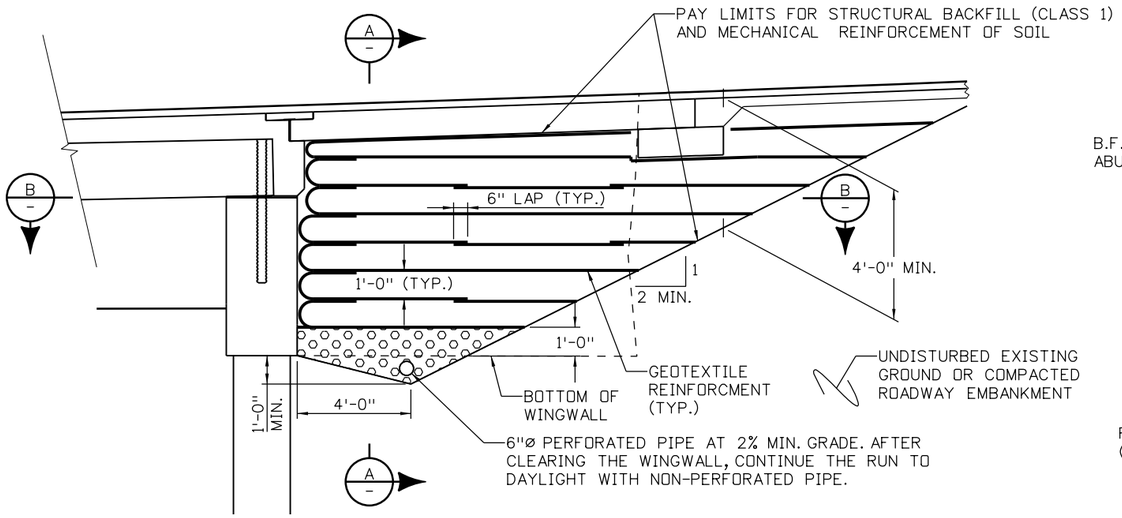

SECTION PERPENDICULAR TO ABUTMENT

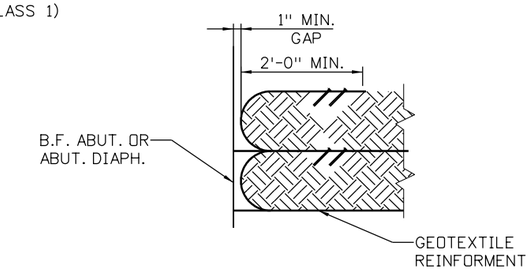

WRAP GAP DETAIL

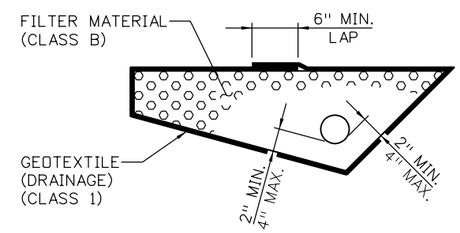

6 INCH PERFORATED PIPE UNDERDRAIN

NOTES:

1. GEOTEXTILE REINFORCEMENT SHALL BE WOVEN FABRIC WITH A MINIMUM AVERAGE ROLL VALUE OF 4800 LB/FT FOR INSTALLATIONS WITH A GAP AND 2400 LB/FT FOR INSTALLATIONS WITHOUT A GAP BASED ON ASTM D4595.
2. GEOTEXTILE REINFORCEMENT SHALL BE PLACED BY ALTERNATING MACHINE DIRECTION (MD) WITH CROSS MACHINE DIRECTION (XD) FROM LAYER TO LAYER.
3. THE GEOTEXTILE REINFORCEMENT WRAP AT BACK FACE OF ABUTMENT SHALL BE PULLED BACK SLACK FREE WITH ITS END ANCHORED TO SOIL UNDERNEATH WITH STAPLES OR PINS.
4. MINIMUM SPLICE OF ALL GEOFABRIC SHALL CONSIST OF 6" OF OVERLAP.
5. PAYMENT FOR ALL WORK ITEMS SHOWN WILL BE MADE UNDER ITEM 206 MECHANICAL REINFORCEMENT OF SOIL (CY) AND ITEM 206 STRUCTURE BACKFILL (CLASS 1) (CY) AND SHALL INCLUDE THE COST FOR 6 INCH ø PERFORATED PIPE UNDERDRAIN, SUBSURFACE DRAIN OUTLET (6 INCH ø NONPERFORATED PIPE), GEOTEXTILE (DRAINAGE) (CLASS 1) AND SURROUNDING THE FILTER MATERIAL (CLASS B).
6. INSTALLATION OF PIPE UNDERDRAIN AND SUBSURFACE DRAIN OUTLET WILL CONFORM TO THE CONSTRUCTION REQUIREMENTS OF SECTION 605.03 AND 605.06, RESPECTIVELY.
7. THE GEOTEXTILE REINFORCEMENT WRAP AT BACK FACE OF ABUTMENT SHALL BE TEMPORARILY HUNG WITH A SPACER BOARD AND TACK STRIP. AFTER REACHING A TOTAL OF 1'-0" COMPACTED LIFT, THE TACK STRIP SHALL BE REMOVED AND TEXTILE REINFORCEMENT SHALL BE PULLED BACK SLACK FREE WITH ITS END ANCHORED TO SOIL UNDERNEATH WITH STAPLE OR PINS BEFORE THE SPACER BOARD IS PULLED. ANY ALTERNATE METHOD TO MAINTAIN THE MINIMUM GAP BETWEEN ABUTMENT CONCRETE AND REINFORCED SOIL MAY BE PROPOSED TO THE ENGINEER FOR APPROVAL.
8. LEE HILL APPROACH BRIDGE SHOWN, BOW MOUNTAIN BRIDGE SIMILAR.

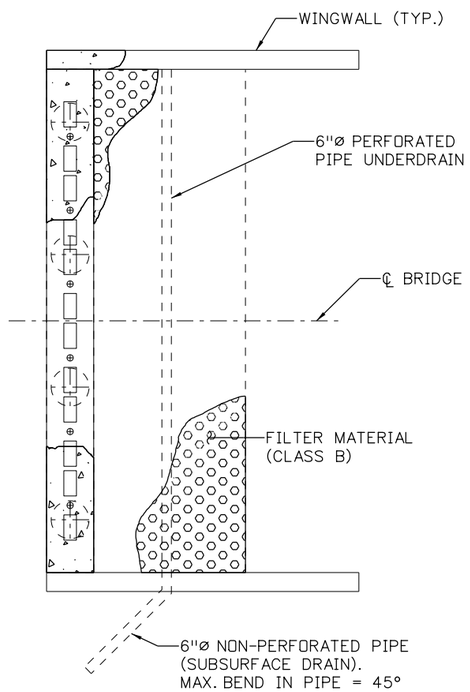

SEE CDOT STD. PLAN NO. M-605-1 FOR END TREATMENT DETAILS

SECTION B

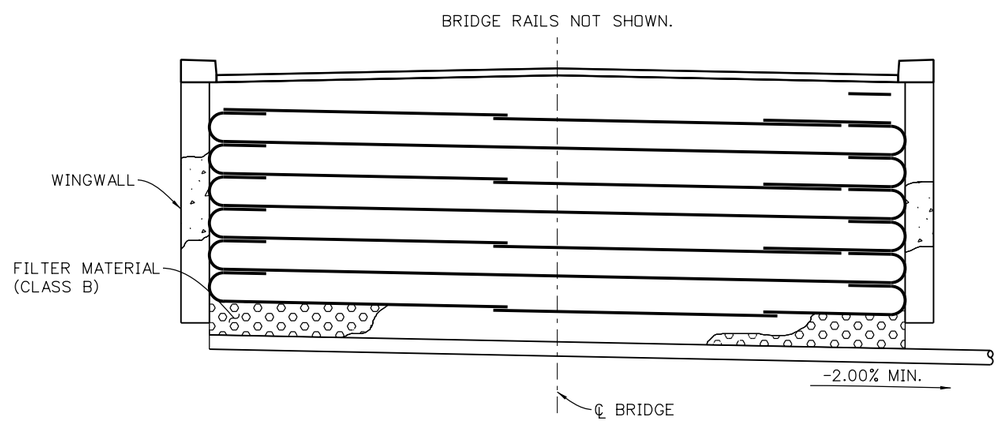

SECTION A

100% SET

CALL UTILITY NOTIFICATION CENTER OF COLORADO
811
CALL 2-BUSINESS DAYS IN ADVANCE BEFORE YOU DIG, GRADE, OR EXCAVATE FOR THE MARKING OF UNDERGROUND MEMBER UTILITIES

REVISIONS: NO.	DATE	REVISION DESCRIPTION:

Boulder County

BOULDER COUNTY TRANSPORTATION DEPARTMENT
ENGINEERING DIVISION

Michael Baker INTERNATIONAL

DESIGNED:	CAD:	CHECKED:	DATE:
MCD	BMT		11/4/2016

WAGONWHEEL GAP ROAD BRIDGES
MECHANICALLY STABILIZED BACKFILL

PROJECT NO: 4043.SEPT12C34 | SHEET NO: 140

mike.doyle 6:10:35 PM pw:\\DCPWAPP1bkr.mbakercorp.com:pwprod\Documents\Projects\Lakewood_Office\Boulder_County_Emergency_Transportation\T04\08_Sheet_Files\06_Structures\DGN\Bridges\138200_BRDG_45.dgn